120.200: STANDARDS FOR PROTECTION AGAINST RADIATION

120.201: Purpose

(A) 105 CMR 120.200 establishes standards for protection against ionizing radiation resulting from activities conducted pursuant to licenses or registrations issued by the Agency. The requirements of 105 CMR 120.200 are designed to control the receipt, possession, use, transfer, and disposal of sources of radiation by any licensee or registrant so the total dose to an individual, including doses resulting from all sources of radiation other than background radiation, does not exceed the standards for protection against radiation prescribed in 105 CMR 120.200. However, nothing in 105 CMR 120.200 shall be construed as limiting actions that may be necessary to protect health and safety.

(B) 105 CMR 120.200 is issued pursuant to M.G.L. c. 111, §§ 3, 5M, 5N, 5O, 5P.

120.202: Scope

Except as otherwise specifically provided in other Parts of 105 CMR 120.000, 105 CMR 120.200 applies to persons licensed or registered by the Department to receive, possess, use, transfer, or dispose of sources of radiation. The limits in 105 CMR 120.200 do not apply to doses due to background radiation, to exposure of patients to radiation for the purpose of medical diagnosis or therapy, to exposure from individuals administered radioactive material and released in accordance with 105 CMR 120.540 or to voluntary participation in medical research programs.

120.203: Definitions

As used in 105 CMR 120.200, the following definitions apply:

Annual Limit on Intake (ALI) means the derived limit for the amount of radioactive material taken into the body of an adult worker by inhalation or ingestion in one year. ALI is the smaller value of intake of a given radionuclide in one year by Reference Man that would result in a committed effective dose equivalent of 0.05 sievert (5 rem) or a committed dose equivalent of 0.5 sievert (50 rems) to any individual organ or tissue. ALI values for intake by ingestion and by inhalation of selected radionuclides are given in 105 CMR 120.296: *Appendix B*, Table I, Columns 1 and 2.

Class means a classification scheme for inhaled material according to its rate of clearance from the pulmonary region of the lung. Materials are classified as D, W, or Y, which applies to a range of clearance half-times: for Class D, Days, of less than ten days, for Class W, Weeks, from ten to 100 days, and for Class Y, Years, of greater than 100 days. For purposes of 105 CMR 120.000, "lung class" and "inhalation class" are equivalent terms.

Declared Pregnant Woman means a woman who has voluntarily informed the licensee or registrant, in writing, of her pregnancy and the estimated date of conception. The declaration remains in effect until the declared pregnant woman withdraws the declaration in writing or is no longer pregnant.

Derived Air Concentration (DAC) means the concentration of a given radionuclide in air which, if breathed by Reference Man for a working year of 2,000 hours under conditions of light work, results in an intake of one ALI. For purposes of 105 CMR 120.000, the condition of light work is an inhalation rate of 1.2 cubic meters of air per hour for 2,000 hours in a year. DAC values are given in 105 CMR 120.296: *Appendix B*, Table I, Column 3.

Derived Air Concentration-hour (DAC-hour) means the product of the concentration of radioactive material in air, expressed as a fraction or multiple of the derived air concentration for each radionuclide, and the time of exposure to that radionuclide, in hours. A licensee may take 2,000 DAC-hours to represent one ALI, equivalent to a committed effective dose equivalent of 0.05 sievert (5 rems).

120.203: continued

Dosimetry Processor means an individual or an organization that processes and evaluates individual monitoring equipment in order to determine the radiation dose delivered to the monitoring equipment.

Inhalation Class *see* Class.

Lung Class *see* Class.

Nationally Tracked Source means a sealed source containing a quantity equal to or greater than Category 1 or Category 2 levels of any radioactive material listed in 105 CMR 120.298: *Appendix D*. In this context a sealed source is defined as radioactive material that is sealed in a capsule or closely bonded, in a solid form and which is not exempt from regulatory control. It does not mean material encapsulated solely for disposal, or nuclear material contained in any fuel assembly, subassembly, fuel rod, or fuel pellet. Category 1 nationally tracked sources are those containing radioactive material at a quantity equal to or greater than the Category 1 threshold. Category 2 nationally tracked sources are those containing radioactive material at a quantity equal to or greater than the Category 2 threshold but less than the Category 1 threshold.

Nonstochastic Effect means a health effect, the severity of which varies with the dose and for which a threshold is believed to exist. Radiation-induced cataract formation is an example of a nonstochastic effect. For purposes of 105 CMR 120.000: Deterministic Effect is an equivalent term.

Planned Special Exposure means an infrequent exposure to radiation, separate from and in addition to the annual occupational dose limits.

Quarter means a period of time equal to ¼ of the year observed by the licensee or registrant, approximately 13 consecutive weeks, providing that the beginning of the first quarter in a year coincides with the starting date of the year and that no day is omitted or duplicated in consecutive quarters.

Reference Man means a hypothetical aggregation of human physical and physiological characteristics determined by international consensus. These characteristics may be used by researchers and public health employees to standardize results of experiments and to relate biological insult to a common base. A description of Reference Man is contained in the International Commission on Radiological Protection report, ICRP Publication 23, *Report of the Task Group on Reference Man*.

Respiratory Protective Device means an apparatus, such as a respirator, used to reduce an individual's intake of airborne radioactive materials.

Sanitary Sewerage means a system of public sewers for carrying off waste water and refuse, but excluding sewage treatment facilities, septic tanks, and leach fields owned or operated by the licensee or registrant.

Stochastic Effect means a health effect that occurs randomly and for which the probability of the effect occurring, rather than its severity, is assumed to be a linear function of dose without threshold. Hereditary effects and cancer incidence are examples of stochastic effects. For purposes of 105 CMR 120.000: Probabilistic Effect is an equivalent term.

Very High Radiation Area means an area, accessible to individuals, in which radiation levels from radiation sources external to the body could result in an individual receiving an absorbed dose in excess of 500 rads (five grays) in one hour at one meter from a source of radiation or from any surface that the radiation penetrates. (At very high doses received at high dose rates, units of absorbed dose, gray and rad, are appropriate, rather than units of dose equivalent, sievert and rem.)

Weighting Factor W_T for an Organ or Tissue (T) means the proportion of the risk of stochastic effects resulting from irradiation of that organ or tissue to the total risk of stochastic effects when the whole body is irradiated uniformly. For calculating the effective dose equivalent, the values of W_T are:

120.203: continued

ORGAN DOSE WEIGHTING FACTORS

Organ or Tissue	w_T
Gonads	0.25
Breast	0.15
Red bone marrow	0.12
Lung	0.12
Thyroid	0.03
Bone surfaces	0.03
Remainder	0.30*
Whole Body	1.00**

* 0.30 results from 0.06 for each of 5 "remainder" organs, excluding the skin and the lens of the eye, that receive the highest doses.

** For the purpose of weighting the external whole body dose, for adding it to the internal dose, a single weighting factor, $w_T = 1.0$, has been specified. The use of other weighting factors for external exposure will be approved on a case-by-case basis until such time as specific guidance is issued.

120.204 Implementation

(A) Any existing license or certificate of registration condition that is more restrictive than 105 CMR 120.200 remains in force until there is an amendment or renewal of the license or registration.

(B) If a license or certificate of registration condition exempts a licensee or registrant from a provision of 105 CMR 120.200 in effect on or before July 9, 1999, it also exempts the licensee or registrant from the corresponding provision of 105 CMR 120.200.

(C) If a license or registration condition cites provisions of 105 CMR 120.200 in effect prior to July 9, 1999, which do not correspond to any provisions of the revised 105 CMR 120.200, the license or registration condition remains in force until there is an amendment or renewal of the license or registration that modifies or removes this condition.

120.210: Radiation Protection Programs

(A) Each licensee or registrant shall develop, document, and implement a radiation protection program sufficient to ensure compliance with the provisions of 105 CMR 120.200. *See* 105 CMR 120.262 for recordkeeping requirements relating to these programs.

(B) The licensee or registrant shall use, to the extent practical, procedures and engineering controls based upon sound radiation protection principles to achieve occupational doses and doses to members of the public that are as low as is reasonably achievable (ALARA).

(C) The licensee or registrant shall, at intervals not to exceed 12 months, review the radiation protection program content and implementation.

(D) To implement the ALARA requirements of 105 CMR 120.210(B), and notwithstanding the requirements in 105 CMR 120.221, a constraint on air emissions of radioactive material to the environment, excluding Radon-222 and its daughters, shall be established by licensees, such that the individual member of the public likely to receive the highest dose will not be expected to receive a total effective dose equivalent in excess of 0.1 mSv (ten mrem) per year from these emissions. If a licensee subject to this requirement exceeds this dose constraint, the licensee shall report the exceedance as provided in 105 CMR 120.283 and promptly take appropriate corrective action to ensure against recurrence.

120.211: Occupational Dose Limits for Adults

(A) The licensee or registrant shall control the occupational dose to individual adults, except for planned special exposures pursuant to 105 CMR 120.216, to the following dose limits:

(1) An annual limit, which is the more limiting of:

(a) the total effective dose equivalent being equal to .05 sievert (five rems); or

(b) the sum of the deep dose equivalent and the committed dose equivalent to any individual organ or tissue other than the lens of the eye being equal to 0.5 sievert (50 rems).

(2) The annual limits to the lens of the eye, to the skin, and to the extremities which are:

(a) a lens dose equivalent of 0.15 sievert (15 rems); and

(b) a shallow dose equivalent of 0.5 sievert (50 rems) to the skin of the whole body or to the skin of any extremity.

(B) Doses received in excess of the annual limits, including doses received during accidents, emergencies, and planned special exposures, shall be subtracted from the limits for planned special exposures that the individual may receive during the current year and during the individual's lifetime. *See* 105 CMR 120.216(E)(1) and (2).

(C) (1) When the external exposure is determined by measurement with an external personal monitoring device, the deep-dose equivalent must be used in place of the effective dose equivalent, unless the effective dose equivalent is determined by a dosimetry method approved by the Agency. The assigned deep-dose equivalent must be for the part of the body receiving the highest exposure. The assigned shallow-dose equivalent must be the dose averaged over the contiguous ten square centimeters of skin receiving the highest exposure. The deep-dose equivalent, lens-dose equivalent, and shallow-dose equivalent may be assessed from surveys or other radiation measurements for the purpose of demonstrating compliance with the occupational dose limits, if the individual monitoring device was not in the region of highest potential exposure, or the results of individual monitoring are unavailable;

(2) When a protective apron is worn while working medical fluoroscopic equipment and monitoring is conducted as specified in 105 CMR 120.226(A)(5), the effective dose equivalent for external radiation shall be determined as follows:

(a) When only one individual monitoring device is used and it is located at the neck (collar) outside the protective apron, the reported deep dose equivalent shall be the effective dose equivalent for external radiation; or

(b) When only one individual monitoring device is used and it is located at the neck (collar) outside the protective apron, and the reported dose exceeds 25% of the limit specified in 105 CMR 120.211(A), the reported deep dose equivalent value multiplied by 0.3 shall be the effective dose equivalent for external radiation; or

(c) When individual monitoring devices are worn, both under the protective apron at the waist and outside the protective apron at the neck, the effective dose equivalent for external radiation shall be assigned the value of the sum of the deep dose equivalent reported for the individual monitoring device located at the waist under the protective apron multiplied by 1.5 and the deep dose equivalent reported for the individual monitoring device located at the neck outside the protective apron multiplied by 0.04.

(D) Derived air concentration (DAC) and annual limit on intake (ALI) values are specified in 105 CMR 120.296: *Appendix B*, Table I and may be used to determine the individual's dose and to demonstrate compliance with the occupational dose limits. *See* 105 CMR 120.267.

(E) In addition to the annual dose limits, the licensee shall limit the soluble uranium intake by an individual to ten milligrams in a week in consideration of chemical toxicity. *See* footnote 3 of 105 CMR 120.296: *Appendix B*.

(F) The licensee or registrant shall reduce the dose that an individual may be allowed to receive in the current year by the amount of occupational dose received while employed by any other person during the current year. *See* 105 CMR 120.265(E).

120.212: Compliance with Requirements for Summation of External and Internal Doses

(A) If the licensee is required to monitor pursuant to both 105 CMR 120.226(A) and (B), the licensee shall demonstrate compliance with the dose limits by summing external and internal doses. If the licensee or registrant is required to monitor only pursuant to 105 CMR 120.226(A) or only pursuant to 105 CMR 120.226(B), then summation is not required to demonstrate compliance with the dose limits. The licensee may demonstrate compliance with the requirements for summation of external and internal doses pursuant to 105 CMR 120.212(B), (C) and (D). The dose equivalents for the lens of the eye, the skin, and the extremities are not included in the summation, but are subject to separate limits.

(B) Intake by Inhalation. If the only intake of radionuclides is by inhalation, the total effective dose equivalent limit is not exceeded if the sum of the deep dose equivalent divided by the total effective dose equivalent limit, and one of the following, does not exceed unity:

(1) the sum of the fractions of the inhalation ALI for each radionuclide;

(2) the total number of derived air concentration-hours (DAC-hours) for all radionuclides divided by 2,000; or

(3) the sum of the calculated committed effective dose equivalents to all significantly irradiated organs or tissues (T) calculated from bioassay data using appropriate biological models and expressed as a fraction of the annual limit. For purposes of this requirement, an organ or tissue is deemed to be significantly irradiated if, for that organ or tissue, the product of the weighting factors, w_T, and the committed dose equivalent, $H_{T,50}$, per unit intake is greater than 10% of the maximum weighted value of $H_{T,50}$, that is, $w_T H_{T,50}$, per unit intake for any organ or tissue.

(C) Intake by Oral Ingestion. If the occupationally exposed individual receives an intake of radionuclides by oral ingestion greater than 10% of the applicable oral ALI, the licensee shall account for this intake and include it in demonstrating compliance with the limits.

(D) Intake through Wounds or Absorption through Skin. The licensee shall evaluate and, to the extent practical, account for intakes through wounds or skin absorption. The intake through intact skin has been included in the calculation of DAC for hydrogen-3 and does not need to be evaluated.

120.213: Determination of External Dose from Airborne Radioactive Material

(A) Licensees shall, when determining the dose from airborne radioactive material, include the contribution to the deep dose equivalent, lens dose equivalent, and shallow dose equivalent from external exposure to the radioactive cloud. *See* 105 CMR 120.296: *Appendix B*, footnotes 1 and 2.

(B) Airborne radioactivity measurements and DAC values shall not be used as the primary means to assess the deep dose equivalent when the airborne radioactive material includes radionuclides other than noble gases or if the cloud of airborne radioactive material is not relatively uniform. The determination of the deep dose equivalent to an individual shall be based upon measurements using instruments or individual monitoring devices.

120.214: Determination of Internal Exposure

(A) For purposes of assessing dose used to determine compliance with occupational dose equivalent limits, the licensee shall, when required pursuant to 105 CMR 120.226, take suitable and timely measurements of:

(1) concentrations of radioactive materials in air in work areas; or

(2) quantities of radionuclides in the body; or

(3) quantities of radionuclides excreted from the body; or

(4) combinations of these measurements.

(B) Unless respiratory protective equipment is used, as provided in 105 CMR 120.233, or the assessment of intake is based on bioassays, the licensee shall assume that an individual inhales radioactive material at the airborne concentration in which the individual is present.

120.214: continued

(C) When specific information on the physical and biochemical properties of the radionuclides taken into the body or the behavior of the material in an individual is known, the licensee may:

(1) use that information to calculate the committed effective dose equivalent, and, if used, the licensee shall document that information in the individual's record;

(2) upon prior approval of the Agency, adjust the DAC or ALI values to reflect the actual physical and chemical characteristics of airborne radioactive material, for example, aerosol size distribution or density; and,

(3) separately assess the contribution of fractional intakes of Class D, W, or Y compounds of a given radionuclide to the committed effective dose equivalent. *See* 105 CMR 120.296: *Appendix B.*

(D) If the licensee chooses to assess intakes of Class Y material using the measurements given in 105 CMR 120.214(A)(2) or (3), the licensee may delay the recording and reporting of the assessments for periods up to seven months, unless otherwise required by 105 CMR 120.282 or 105 CMR 120.283. This delay permits the licensee to make additional measurements basic to the assessments.

(E) If the identity and concentration of each radionuclide in a mixture are known, the fraction of the DAC applicable to the mixture for use in calculating DAC-hours shall be either:

(1) the sum of the ratios of the concentration to the appropriate DAC value, that is, D, W, or Y, from 105 CMR 120.296: *Appendix B* for each radionuclide in the mixture; or,

(2) the ratio of the total concentration for all radionuclides in the mixture to the most restrictive DAC value for any radionuclide in the mixture.

(F) If the identity of each radionuclide in a mixture is known, but the concentration of one or more of the radionuclides in the mixture is not known, the DAC for the mixture shall be the most restrictive DAC of any radionuclide in the mixture.

(G) When a mixture of radionuclides in air exists, a licensee may disregard certain radionuclides in the mixture if:

(1) the licensee uses the total activity of the mixture in demonstrating compliance with the dose limits in 105 CMR 120.211 and in complying with the monitoring requirements in 105 CMR 120.226(B);

(2) the concentration of any radionuclide disregarded is less than 10% of its DAC; and,

(3) the sum of these percentages for all of the radionuclides disregarded in the mixture does not exceed 30%.

(H) When determining the committed effective dose equivalent, the following information may be considered:

(1) In order to calculate the committed effective dose equivalent, the licensee may assume that the inhalation of one ALI, or an exposure of 2,000 DAC-hours, results in a committed effective dose equivalent of 0.05 sievert (5 rems) for radionuclides that have their ALIs or DACs based on the committed effective dose equivalent.

(2) For an ALI and the associated DAC determined by the nonstochastic organ dose limit of 0.5 sievert (50 rems), the intake of radionuclides that would result in a committed effective dose equivalent of 0.05 sievert (5 rems), that is, the stochastic ALI, is listed in parentheses in 105 CMR 120.296: *Appendix B*, Table I. The licensee may, as a simplifying assumption, use the stochastic ALI to determine committed effective dose equivalent. However, if the licensee uses the stochastic ALI, the licensee shall also demonstrate that the limit in 105 CMR 120.211(A)(1)(b) is met.

120.216: Planned Special Exposures

A licensee or registrant may authorize an adult worker to receive doses in addition to and accounted for separately from the doses received under the limits specified in 105 CMR 120.211 provided that each of the following conditions is satisfied:

(A) The licensee or registrant authorizes a planned special exposure only in an exceptional situation when alternatives that might avoid the dose estimated to result from the planned special exposure are unavailable or impractical.

120.216: continued

(B) The licensee or registrant, and employer if the employer is not the licensee or registrant, specifically authorizes the planned special exposure, in writing, before the exposure occurs.

(C) Before a planned special exposure, the licensee or registrant ensures that each individual involved is:

(1) informed of the purpose of the planned operation;

(2) informed of the estimated doses and associated potential risks and specific radiation levels or other conditions that might be involved in performing the task; and

(3) instructed in the measures to be taken to keep the dose ALARA considering other risks that may be present.

(D) Prior to permitting an individual to participate in a planned special exposure, the licensee or registrant ascertains prior doses as required by 105 CMR 120.265(B) during the lifetime of the individual for each individual involved.

(E) Subject to 105 CMR 120.211(B), the licensee or registrant shall not authorize a planned special exposure that would cause an individual to receive a dose from all planned special exposures and all doses in excess of the limits to exceed:

(1) the numerical values of any of the dose limits in 105 CMR 120.211(A) in any year; and

(2) five times the annual dose limits in 105 CMR 120.211(A) during the individual's lifetime.

(F) The licensee or registrant maintains records of the conduct of a planned special exposure in accordance with 105 CMR 120.266 and submits a written report to the Agency in accordance with 105 CMR 120.284.

(G) The licensee or registrant records the best estimate of the dose resulting from the planned special exposure in the individual's record and informs the individual, in writing, of the dose within 30 days from the date of the planned special exposure. The dose from planned special exposures shall not be considered in controlling future occupational dose of the individual pursuant to 105 CMR 120.211(A) but shall be included in evaluations required by 105 CMR 120.216(D) and (E).

120.217: Occupational Dose Limits for Minors

The annual occupational dose limits for minors are 10% of the annual occupational dose limits specified for adult workers in 105 CMR 120.211.

120.218: Dose Equivalent to an Embryo/Fetus

(A) The licensee or registrant shall ensure that the dose equivalent to an embryo/fetus during the entire pregnancy, due to occupational exposure of a declared pregnant woman, does not exceed five millisieverts (0.5 rems). *See* 105 CMR 120.267 for recordkeeping requirements.

(B) The licensee or registrant shall make efforts to avoid substantial variation above a uniform monthly exposure rate to a declared pregnant woman so as to satisfy the limit in 105 CMR 120.218(A).

(C) The dose equivalent to the embryo/fetus is the sum of:

(1) the deep dose equivalent to the declared pregnant woman; and

(2) the dose equivalent resulting from radionuclides in the embryo/fetus and radionuclides in the declared pregnant woman.

(D) If the dose equivalent to the embryo/fetus is found to have exceeded 5.0 mSv (0.5 rem), or is within 0.5 mSv (0.05 rem) of this dose, by the time the woman declares the pregnancy to the licensee or registrant, the licensee or registrant shall be deemed to be in compliance with 105 CMR 120.218(A), if the additional dose to the embryo/fetus does not exceed 0.5 millisievert (0.05 rem) during the remainder of the pregnancy.

RADIATION DOSE LIMITS

120.221: Dose Limits for Individual Members of the Public

(A) Each licensee or registrant shall conduct operations so that:

(1) the total effective dose equivalent to individual members of the public from the licensed or registered operation does not exceed one millisievert (0.1 rem) in a year, exclusive of the dose contribution from background radiation, from any medical administration the individual has received, from exposure to individuals administered radioactive material and released in accordance with 105 CMR 120.540, from voluntary participation in medical research programs, and from the licensee's disposal of radioactive material into sanitary sewerage in accordance with 105 CMR 120.253; and

(2) the dose in any unrestricted area from external sources exclusive of the dose contributions from patients administered radioactive material and released in accordance with 105 CMR 120.540, does not exceed 0.02 millisievert (0.002 rem) in any one hour; and

(3) the total effective dose equivalent to individual members of the public from infrequent exposure to radiation from radiation machines does not exceed 5mSv (0.5 rem).

(B) If the licensee or registrant permits members of the public to have access to restricted areas, the limits for members of the public continue to apply to those individuals.

(C) A licensee, registrant, or an applicant for a license or registration may apply for prior Agency authorization to operate up to an annual dose limit for an individual member of the public of five millisieverts (0.5 rem). This application shall include the following information:

(1) demonstration of the need for and the expected duration of operations in excess of the limit in 105 CMR 120.221(A);

(2) the licensee's or registrant's program to assess and control dose within the five millisieverts (0.5 rem) annual limit; and

(3) the procedures to be followed to maintain the dose ALARA.

(D) In addition to the requirements of 105 CMR 120.200, a licensee subject to the provisions of the U.S. Environmental Protection Agency's generally applicable environmental radiation standards in 40 CFR 190 shall comply with those requirements.

(E) The Agency may impose additional restrictions on radiation levels in unrestricted areas and on the total quantity of radionuclides that a licensee may release in effluents in order to restrict the collective dose.

120.222: Compliance with Dose Limits for Individual Members of the Public

(A) The licensee or registrant shall make or cause to be made surveys of radiation levels in unrestricted areas and radioactive materials in effluents released to unrestricted areas to demonstrate compliance with the dose limits for individual members of the public in 105 CMR 120.221.

(B) A licensee or registrant shall show compliance with the annual dose limit in 105 CMR 120.221 by:

(1) demonstrating by measurement or calculation that the total effective dose equivalent to the individual likely to receive the highest dose from the licensed or registered operation does not exceed the annual dose limit; or,

(2) demonstrating that:

(a) the annual average concentrations of radioactive material released in gaseous and liquid effluents at the boundary of the unrestricted area do not exceed the values specified in 105 CMR 120.296: *Appendix B*, Table II; and,

(b) if an individual were continuously present in an unrestricted area, the dose from external sources would not exceed 0.002 rem (0.02 millisievert) in an hour and 0.05 rem (0.5 millisievert) in a year.

(C) Upon approval from the Agency, the licensee may adjust the effluent concentration values in 105 CMR 120.296: *Appendix B*, Table II, for members of the public, to take into account the actual physical and chemical characteristics of the effluents, such as, aerosol size distribution, solubility, density, radioactive decay equilibrium, and chemical form.

120.223: Testing for Leakage or Contamination of Sealed Sources

(A) The licensee or registrant in possession of any sealed source shall assure that:

(1) Each sealed source, except as specified in 105 CMR 120.223(B), is tested for leakage or contamination and the test results are received before the sealed source is put into use unless the licensee or registrant has a certificate from the transferor indicating that the sealed source was tested within six months before transfer to the licensee or registrant.

(2) Each sealed source that is not designed to emit alpha particles is tested for leakage or contamination at intervals not to exceed six months or at alternative intervals approved by the Agency, after evaluation of information specified by 105 CMR 120.128(N), an Agreement State, a Licensing State, or the U.S. Nuclear Regulatory Commission.

(3) Each sealed source that is designed to emit alpha particles is tested for leakage or contamination at intervals not to exceed three months or at alternative intervals approved by the Agency, after evaluation of information specified by 105 CMR 120.128(N), an Agreement State, a Licensing State, or the Nuclear Regulatory Commission.

(4) For each sealed source that is required to be tested for leakage or contamination, at any other time there is reason to suspect that the sealed source might have been damaged or might be leaking, the licensee or registrant shall assure that the sealed source is tested for leakage or contamination before further use.

(5) Tests for leakage for all sealed sources, except brachytherapy sources manufactured to contain radium, shall be capable of detecting the presence of 185 Bq (0.005 μCi) of radioactive material on a test sample. Test samples shall be taken from the sealed source or from the surfaces of the container in which the sealed source is stored or mounted on which one might expect contamination to accumulate. For a sealed source contained in a device, test samples are obtained when the source is in the "off" position.

(6) The test for leakage for brachytherapy sources manufactured to contain radium shall be capable of detecting an absolute leakage rate of 37 Bq (0.001 μCi) of radon-222 in a 24 hour period when the collection efficiency for radon-222 and its daughters has been determined with respect to collection method, volume and time.

(7) Tests for contamination from radium daughters shall be taken on the interior surface of brachytherapy source storage containers and shall be capable of detecting the presence of 185 Bq (0.005 μCi) of a radium daughter which has a half-life greater than four days.

(B) A licensee or registrant need not perform test for leakage or contamination on the following sealed sources:

(1) Sealed sources containing only radioactive material with a half-life of less than 30 days;

(2) Sealed sources containing only radioactive material as a gas;

(3) Sealed sources containing 3.7 MBq (100 μCi) or less of beta or photon-emitting material or 370 kBq (10 μCi) or less of alpha-emitting material;

(4) Sealed sources containing only hydrogen-3;

(5) Seeds of iridium-192 encased in nylon ribbon; and

(6) Sealed sources, except teletherapy and brachytherapy sources, which are stored, not being used and identified as in storage. The licensee or registrant shall, however, test each such sealed source for leakage or contamination and receive the test results before any use or transfer unless it has been tested for leakage or contamination within 6 months before the date of use or transfer.

(C) Tests for leakage or contamination from sealed sources shall be performed by persons specifically authorized by the Agency, an Agreement State, a Licensing State, or the U.S. Nuclear Regulatory Commission to perform such services.

(D) Test results shall be kept in units of becquerel or microcurie and maintained for inspection by the Agency.

(E) The following shall be considered evidence that a sealed source is leaking:

(1) The presence of 185 Bq (0.005 μCi) or more of removable contamination on any test sample.

(2) Leakage of 37 Bq (0.001 μCi) of radon-222 per 24 hours for brachytherapy sources manufactured to contain radium.

120.223: continued

(3) The presence of removable contamination resulting from the decay of 185 Bq (0.005 μCi) or more of radium.

(F) The licensee or registrant shall immediately withdraw a leaking sealed source from use and shall take action to prevent the spread of contamination. The leaking sealed source shall be repaired or disposed of in accordance with this 105 CMR 120.200.

(G) Reports of test results for leaking or contaminated sealed sources shall be made pursuant to 105 CMR 120.288.

SURVEYS AND MONITORING

120.225: General

(A) Each licensee or registrant shall make, or cause to be made, surveys that:
(1) are necessary for the licensee or registrant to comply with 105 CMR 120.200;
(2) are necessary under the circumstances to evaluate:
(a) the magnitude and extent of radiation levels;
(b) concentrations or quantities of radioactive material; and
(c) the potential radiological hazards.

(B) The licensee or registrant shall ensure that instruments and equipment used for quantitative radiation measurements, for example, dose rate and effluent monitoring, are calibrated at intervals not to exceed 12 months for the radiation measured except when a more frequent interval is specified in another applicable section of 105 CMR 120.000 or license condition.

(C) All personnel dosimeters, except for direct and indirect reading pocket ionization chambers and those dosimeters used to measure the dose to any extremity, that require processing to determine the radiation dose and that are used by licensees and registrants to comply with 105 CMR 120.211, with other applicable provisions of 105 CMR 120.000, or with conditions specified in a license or certificate of registration, shall be processed and evaluated by a dosimetry processor:
(1) holding current personnel dosimetry accreditation from the National Voluntary Laboratory Accreditation Program (NVLAP) of the National Institute of Standards and Technology; and
(2) approved in this accreditation process for the type of radiation or radiations included in the NVLAP program that most closely approximates the type of radiation or radiations for which the individual wearing the dosimeter is monitored.

(D) The licensee or registrant shall ensure that adequate precautions are taken to prevent a deceptive exposure of an individual monitoring device.

120.226: Conditions Requiring Individual Monitoring of External and Internal Occupational Dose

Each licensee or registrant shall monitor exposures from sources of radiation at levels sufficient to demonstrate compliance with the occupational dose limits of 105 CMR 120.200. As a minimum:

(A) Each licensee or registrant shall monitor occupational exposure to radiation from licensed and unlicensed radiation sources under its control and shall supply and require the use of individual monitoring devices by:
(1) adults likely to receive, in one year from sources external to the body, a dose in excess of 10% of the limits in 105 CMR 120.211(A);
(2) minors likely to receive, in one year from sources external to the body, a deep dose equivalent in excess of one millisievert (0.1 rem) a lens dose equivalent in excess of 1.5 millisievert (0.15 rem), or a shallow dose equivalent to the skin or to the extremities in excess of five millisieverts (0.5 rem);

120.226: continued

(3) Declared pregnant women likely to receive during the entire pregnancy, from radiation sources external to the body, a deep dose equivalent in excess of one millisievert (0.1 rem) [Note: All of the occupational doses in 105 CMR 120.211 continue to be applicable to the declared pregnant worker as long as the embryo/fetus dose limit is not exceeded]; and

(4) individuals entering a high or very high radiation area.

(5) Individuals working medical fluoroscopic equipment.

(a) An individual monitoring device used for the dose to an embryo/fetus of a declared pregnant woman, pursuant to 105 CMR 120.218(A), shall be located under the protective apron at the waist.

(b) An individual monitoring device used for lens dose equivalent shall be located at the neck (collar), or an unshielded location closer to the eye, outside the protective apron.

(c) When only one individual monitoring device is used to determine the effective dose equivalent for external radiation pursuant to 105 CMR 120.211(C)(2), it shall be located at the neck (collar) outside the protective apron. When a second individual monitoring device is used, for the same purpose, it shall be located under the protective apron at the waist. The second individual monitoring device is required for a declared pregnant woman.

(B) Each licensee shall monitor, to determine compliance with 105 CMR 120.214, the occupational intake of radioactive material by and assess the committed effective dose equivalent to:

(1) adults likely to receive, in one year, an intake in excess of 10% of the applicable ALI in 105 CMR 120.296: *Appendix B*, Table I, Columns 1 and 2; and

(2) minors likely to receive, in one year, a committed effective dose equivalent in excess of 0.1 millisievert (0.01 rem).

(3) declared pregnant women likely to receive, during the entire pregnancy, a committed effective dose equivalent in excess of 1m Sv (0.1 rem).

(C) Each licensee or registrant shall ensure that individuals who are required to monitor occupational doses in accordance with 105 CMR 120.226(A) wear individual monitoring devices as follows:

(1) An individual monitoring device used for monitoring the dose to whole body shall be worn at the unshielded location of the whole body likely to receive the highest exposure. When a protective apron is worn, the location of the individual monitoring device is typically at the neck (collar).

(2) An individual monitoring device used for monitoring the dose to an embryo/fetus of a declared pregnant woman, pursuant to 105 CMR 120.218(A), shall be located at the waist under any protective apron being worn by the woman.

(3) An individual monitoring device used for monitoring lens dose equivalent, to demonstrate compliance with 105 CMR 120.211(A)(2)(a), shall be located at the neck (collar), outside any protective apron being worn by the monitored individual, or at an unshielded location closer to the eye.

(4) An individual monitoring device used for monitoring the dose to the extremities, to demonstrate compliance with 105 CMR 120.211(A)(2)(b), shall be worn on the extremity most likely to receive the highest exposure. Each individual monitoring device shall be oriented to measure the highest dose to the extremity being monitored.

120.227: Control of Access to High Radiation Areas

(A) The licensee or registrant shall ensure that each entrance or access point to a high radiation area has one or more of the following features:

(1) a control device that, upon entry into the area, causes the level of radiation to be reduced below that level at which an individual might receive a deep dose equivalent of 0.1 rem (one millisievert) in one hour at 30 centimeters from the source of radiation or from any surface that the radiation penetrates;

(2) a control device that energizes a conspicuous visible or audible alarm signal so that the individual entering the high radiation area and the supervisor of the activity are made aware of the entry; or,

(3) entryways that are locked, except during periods when access to the areas is required, with positive control over each individual entry.

120.227: continued

(B) In place of the controls required by 105 CMR 120.227(A) for a high radiation area, the licensee or registrant may substitute continuous direct or electronic surveillance that is capable of preventing unauthorized entry.

(C) The licensee or registrant may apply to the Agency for approval of alternative methods for controlling access to high radiation areas.

(D) The licensee or registrant shall establish the controls required by 105 CMR 120.227(A) and 120.227(C) in a way that does not prevent individuals from leaving a high radiation area.

(E) The licensee is not required to control each entrance or access point to a room or other area that is a high radiation area solely because of the presence of radioactive materials prepared for transport and packaged and labeled in accordance with the regulations of the U.S. Department of Transportation provided that:

(1) the packages do not remain in the area longer than three days; and,

(2) the dose rate at one meter from the external surface of any package does not exceed 0.1 millisievert (0.01 rem) per hour.

(F) The licensee is not required to control entrance or access to rooms or other areas in hospitals solely because of the presence of patients containing radioactive material, provided that there are personnel in attendance who are taking the necessary precautions to prevent the exposure of individuals to radiation or radioactive material in excess of the established limits in this part and to operate within the ALARA provisions of the licensee's radiation protection program.

(G) The registrant is not required to control entrance or access to rooms or other areas containing sources of radiation capable of producing a high radiation area as described in 105 CMR 120.227 if the registrant has met all the specific requirements for access and control specified in other applicable parts of 105 CMR 120.000, such as, 105 CMR 120.300 for industrial radiography, 105 CMR 120.430 for x-rays in the healing arts, and 105 CMR 120.700 for particle accelerators.

120.228: Control of Access to Very High Radiation Areas

(A) In addition to the requirements in 105 CMR 120.227, the licensee or registrant shall institute measures to ensure that an individual is not able to gain unauthorized or inadvertent access to areas in which radiation levels could be encountered at five grays (500 rads) or more in one hour at one meter from a source of radiation or any surface through which the radiation penetrates at this level. This requirement does not apply to rooms or areas in which diagnostic x-ray systems are the only source of radiation.

(B) The registrant is not required to control entrance or access to rooms or other areas containing sources of radiation capable of producing a very high radiation area as described in 105 CMR 120.228(A) if the registrant has met all the specific requirements for access and control specified in other applicable parts of 105 CMR 120.000, such as, 105 CMR 120.300 for industrial radiography, 105 CMR 120.430 for x-rays in the healing arts, and 105 CMR 120.700 for particle accelerators.

120.229: Control of Access to Very High Radiation Areas -- Irradiators

(A) 105 CMR 120.229 applies to licensees with sources of radiation in non-self-shielded irradiators. 105 CMR 120.229 does not apply to sources of radiation that are used in teletherapy, in industrial radiography, or in completely self-shielded irradiators in which the source of radiation is both stored and operated within the same shielding radiation barrier and, in the designed configuration of the irradiator, is always physically inaccessible to any individual and cannot create high levels of radiation in an area that is accessible to any individual.

(B) Each area in which there may exist radiation levels in excess of five grays (500 rads) in one hour at one meter from a source of radiation that is used to irradiate materials shall meet the following requirements:

120.229: continued

(1) Each entrance or access point shall be equipped with entry control devices which:

(a) function automatically to prevent any individual from inadvertently entering a very high radiation area;

(b) permit deliberate entry into the area only after a control device is actuated that causes the radiation level within the area, from the source of radiation, to be reduced below that at which it would be possible for an individual to receive a deep dose equivalent in excess of one millisievert (0.1 rem) in one hour; and,

(c) prevent operation of the source of radiation if it would produce radiation levels in the area that could result in a deep dose equivalent to an individual in excess of one millisievert (0.1 rem) in one hour.

(2) Additional control devices shall be provided so that, upon failure of the entry control devices to function as required by 105 CMR 120.229(B)(1):

(a) the radiation level within the area, from the source of radiation, is reduced below that at which it would be possible for an individual to receive a deep dose equivalent in excess of one millisievert (0.1 rem) in one hour; and,

(b) conspicuous visible and audible alarm signals are generated to make an individual attempting to enter the area aware of the hazard and at least one other authorized individual, who is physically present, familiar with the activity, and prepared to render or summon assistance, aware of the failure of the entry control devices.

(3) The licensee shall provide control devices so that, upon failure or removal of physical radiation barriers other than the sealed source's shielded storage container:

(a) the radiation level from the source of radiation is reduced below that at which it would be possible for an individual to receive a deep dose equivalent in excess of one millisievert (0.1 rem) in one hour; and,

(b) conspicuous visible and audible alarm signals are generated to make potentially affected individuals aware of the hazard and the licensee or at least one other individual, who is familiar with the activity and prepared to render or summon assistance, aware of the failure or removal of the physical barrier.

(4) When the shield for stored sealed sources is a liquid, the licensee shall provide means to monitor the integrity of the shield and to signal, automatically, loss of adequate shielding.

(5) Physical radiation barriers that comprise permanent structural components, such as walls, that have no credible probability of failure or removal in ordinary circumstances, need not meet the requirements of 105 CMR 120.229(B)(3) and 120.229(B)(4).

(6) Each area shall be equipped with devices that will automatically generate conspicuous visible and audible alarm signals to alert personnel in the area before the source of radiation can be put into operation and in time for any individual in the area to operate a clearly identified control device, which must be installed in the area and which can prevent the source of radiation from being put into operation.

(7) Each area shall be controlled by use of such administrative procedures and such devices as are necessary to ensure that the area is cleared of personnel prior to each use of the source of radiation.

(8) Each area shall be checked by a radiation measurement to ensure that, prior to the first individual's entry into the area after any use of the source of radiation, the radiation level from the source of radiation in the area is below that at which it would be possible for an individual to receive a deep dose equivalent in excess of one millisievert (0.1 rem) in one hour.

(9) The entry control devices required in 105 CMR 120.229(B)(1) shall be tested for proper functioning. *See* 105 CMR 120.270 for recordkeeping requirements.

(a) Testing shall be conducted prior to initial operation with the source of radiation on any day, unless operations were continued uninterrupted from the previous day.

(b) Testing shall be conducted prior to resumption of operation of the source of radiation after any unintentional interruption.

(c) The licensee shall submit and adhere to a schedule for periodic tests of the entry control and warning systems.

(10) The licensee shall not conduct operations, other than those necessary to place the source of radiation in safe condition or to effect repairs on controls, unless control devices are functioning properly.

120.229: continued

(11) Entry and exit portals that are used in transporting materials to and from the irradiation area, and that are not intended for use by individuals, shall be controlled by such devices and administrative procedures as are necessary to physically protect and warn against inadvertent entry by any individual through these portals. Exit portals for irradiated materials shall be equipped to detect and signal the presence of any loose radioactive material that is carried toward such an exit and automatically to prevent loose radioactive material from being carried out of the area.

(C) Licensees or applicants for licenses for sources of radiation within the purview of 105 CMR 120.229(B) which will be used in a variety of positions or in locations, such as open fields or forests, that make it impracticable to comply with certain requirements of 105 CMR 120.229(B), such as those for the automatic control of radiation levels, may apply to the Agency for approval of alternative safety measures. Alternative safety measures shall provide personnel protection at least equivalent to those specified in 105 CMR 120.229(B). At least one of the alternative measures shall include an entry-preventing interlock control based on a measurement of the radiation that ensures the absence of high radiation levels before an individual can gain access to the area where such sources of radiation are used.

(D) The entry control devices required by 105 CMR 120.229(B) and (C) shall be established in such a way that no individual will be prevented from leaving the area.

120.231: Use of Process or Other Engineering Controls

The licensee shall use, to the extent practical, process or other engineering controls, such as, containment, decontamination or ventilation, to control the concentrations of radioactive material in air.

120.232: Use of Other Controls

(A) When it is not practicable to apply process or other engineering controls to control the concentrations of radioactive material in air to values below those that define an airborne radioactivity area, the licensee shall, consistent with maintaining the total effective dose equivalent ALARA, increase monitoring and limit intakes by one or more of the following means:

(1) control of access;
(2) limitation of exposure times;
(3) use of respiratory protection equipment; and,
(4) other controls.

(B) If the licensee performs an ALARA analysis to determine whether or not respirators should be used, the licensee may also consider the impact of respirator use on workers' industrial health and safety.

120.233: Use of Individual Respiratory Protection Equipment

If the licensee or registrant uses respiratory protection equipment to limit intakes pursuant to 105 CMR 120.232:

(A) Except as provided in 105 CMR 120.233(A)(2), the licensee or registrant shall use only respiratory protection equipment that is tested and certified by the National Institute for Occupational Safety and Health.

(B) If the licensee or registrant wishes to use equipment that has not been tested or certified by the National Institute for Occupational Safety, or for which there is no schedule for testing or certification, the licensee shall submit an application to the Agency for authorization to use this equipment, except as otherwise noted in 105 CMR 120.200. The application must include evidence that the material and performance characteristics of the equipment are capable of providing the proposed degree of protection under anticipated conditions of use. This must be demonstrated either by the licensee's or registrant's testing or on the basis of reliable test information;

120.233: continued

(C) The licensee or registrant shall implement and maintain a respiratory protection program that includes:

(1) air sampling sufficient to identify the potential hazard, permit proper equipment selection, and estimate doses;

(2) surveys and bioassays, as necessary, to evaluate actual intakes;

(3) testing of respirators for operability user seal check for face sealing devices and functional check for others immediately prior to each use;

(4) written procedures regarding:

(a) Monitoring, including air sampling and bioassays;

(b) Supervision and training or respirator users;

(c) Fit testing;

(d) Respirator selection;

(e) Breathing air quality;

(f) Inventory and control;

(g) Storage, issuance, maintenance, repair, testing, and quality assurance of respiratory protection equipment;

(h) Recordkeeping; and,

(i) Limitations on periods of respirator use and relief from respirator use.

(5) determination by a physician that the individual user is medically fit to use the respiratory protection equipment before:

(a) The initial fitting of a face sealing respirator;

(b) Before the first field use of non-face sealing respirators, and

(c) Either every 12 months thereafter, or periodically at a frequency determined by a physician.

(6) Fit testing, with a fit factor ≥ 10 times the APF for negative pressure devices, and a fit factor ≥ 500 for any positive pressure, continuous flow, and pressure-demand devices, before the first field use of tight fitting, face sealing respirators and periodically thereafter at a frequency not to exceed one year. Fit testing must be performed with the facepiece operating in the negative pressure mode.

(D) The licensee or registrant shall advise each respirator user that the user may leave the area at any time for relief from respirator use in the event of equipment malfunction, physical or psychological distress, procedural or communication failure, significant deterioration of operating conditions, or any other conditions that might require such relief.

(E) The licensee or registrant shall also consider limitations appropriate to the type and mode of use. When selecting respiratory devices the licensee or registrant shall provide for vision correction, adequate communication, low temperature work environments and the concurrent use of other safety or radiological protection equipment. The licensee or registrant shall use equipment in such a way as not to interfere with the proper operation of the respirator.

(F) Standby rescue persons are required whenever one-piece atmosphere-supplying suits, or any combination of supplied air respiratory protection device and personnel protective equipment are used from which an unaided individual would have difficulty extricating himself or herself. The standby persons must be equipped with respiratory protection devices or other apparatus appropriate for the potential hazards. The standby rescue persons shall observe or otherwise maintain continuous communication with the workers (visual, voice, signal line, telephone, radio, or other suitable means), and be immediately available to assist them in case of a failure of the air supply or for any other reason that requires relief from distress. A sufficient number of standby rescue persons must be immediately available to assist all users of this type of equipment and to provide effective emergency rescue if needed.

(G) Atmosphere-supplying respirators must be supplied with respirable air of grade D quality or better as defined by the Compressed Gas Association in publication G-7.1, "Commodity Specification for Air," 1997 and included in the regulations of the Occupational Safety and Health Administration (29 CFR 1910.134(i)(1)(ii)(A) through (E). Grade D quality air criteria include:

(1) Oxygen content (v/v) of 19.5-23.5%;

(2) Hydrocarbon (condensed) content of 5 milligrams per cubic meter of air or less;

(3) Carbon Monoxide (CO) content of 10 ppm or less;

120.233: continued

(4) Carbon Dioxide content of 1,000 ppm or less; and,
(5) Lack of noticeable odor

(H) The licensee shall ensure that no objects, materials or substances, such as facial hair, or any conditions that interfere with the face-facepiece seal or valve function, and that are under the control of the wearer, are present between the skin of the wearer's face and the sealing surface of a tight-fitting respirator facepiece.

(I) In estimating the dose to individuals from intake of airborne radioactive materials, the concentration of radioactive material in the air that is inhaled when respirators are worn is initially assumed to be the ambient concentration in air without the respiratory protection, divided by the assigned protection factor. If the dose is later found to be greater than the estimated dose, the corrected value must be used. If the dose is later found to be less than the estimated dose, the corrected value may be used.

120.234: Further Restrictions on the Use of Respiratory Protection Equipment

The Agency may impose restrictions in addition to the provisions of 105 CMR 120.232 and 120.233, and 120.295: *Appendix A*, in order to:

(A) Ensure that the respiratory protection program of the licensee is adequate to limit doses to individuals from intakes of radioactive materials consistent with maintaining total effective dose equivalent ALARA; and,

(B) Limit the extent to which a licensee may use respiratory protection equipment instead of process or other engineering controls.

120.235: Application for Use of Higher Assigned Protection Factors

The licensee or registrant shall obtain authorization from the Agency before using assigned respiratory protection factors in excess of those specified in 105 CMR 120.295: *Appendix A*. The Agency may authorize a licensee or registrant to use higher protection factors on receipt of an application that:

(A) Describes the situation for which a need exists for higher protection factors; and,

(B) Demonstrates that the respiratory protection equipment provides these higher protection factors under the proposed conditions of use.

120.236: Security and Control of Licensed or Registered Sources of Radiation

(A) The licensee shall secure licensed radioactive material from unauthorized removal or access.

(B) The licensee shall maintain constant surveillance, and use devices or administrative procedures to prevent unauthorized use of licensed radioactive material that is in an unrestricted area and that is not in storage.

(C) The registrant shall secure registered radiation machines from unauthorized removal.

(D) The registrant shall use devices or administrative procedures to prevent unauthorized use of registered radiation machines.

120.237: Caution Signs

(A) Standard Radiation Symbol. Unless otherwise authorized by the Agency, the symbol prescribed by 105 CMR 120.237 shall use the colors magenta, or purple, or black on yellow background. The symbol prescribed is the three-bladed design as follows:

120.237: continued

RADIATION SYMBOL

1. Cross-hatched area is to be magenta, or purple, or black, and
2. The background is to be yellow.

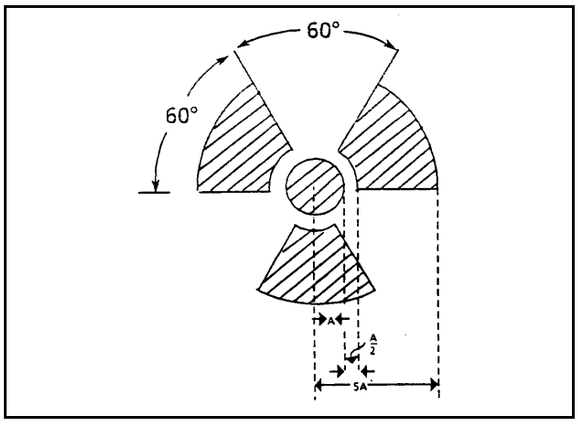

(B) Exception to Color Requirements for Standard Radiation Symbol. Notwithstanding the requirements of 105 CMR 120.237(A), licensees or registrants are authorized to label sources, source holders, or device components containing sources of radiation that are subjected to high temperatures, with conspicuously etched or stamped radiation caution symbols and without a color requirement.

(C) Additional Information on Signs and Labels. In addition to the contents of signs and labels prescribed in this part, the licensee or registrant shall provide, on or near the required signs and labels, additional information, as appropriate, to make individuals aware of potential radiation exposures and to minimize the exposures.

120.238: Posting Requirements

(A) Posting of Radiation Areas. The licensee or registrant shall post each radiation area with a conspicuous sign or signs bearing the radiation symbol and the words "CAUTION, RADIATION AREA."

(B) Posting of High Radiation Areas. The licensee or registrant shall post each high radiation area with a conspicuous sign or signs bearing the radiation symbol and the words "CAUTION, HIGH RADIATION AREA" or "DANGER, HIGH RADIATION AREA."

(C) Posting of Very High Radiation Areas. The licensee or registrant shall post each very high radiation area with a conspicuous sign or signs bearing the radiation symbol and words "GRAVE DANGER [not required to use the word GRAVE, this may be omitted], VERY HIGH RADIATION AREA."

(D) Posting of Airborne Radioactivity Areas. The licensee shall post each airborne radioactivity area with a conspicuous sign or signs bearing the radiation symbol and the words "CAUTION, AIRBORNE RADIOACTIVITY AREA" or "DANGER, AIRBORNE RADIOACTIVITY AREA."

(E) Posting of Areas or Rooms in Which Licensed Material is Used or Stored. The licensee shall post each area or room in which there is used or stored an amount of licensed material exceeding ten times the quantity of such material specified in 105 CMR 120.297: *Appendix C* with a conspicuous sign or signs bearing the radiation symbol and the words "CAUTION, RADIOACTIVE MATERIAL(S)" or "DANGER, RADIOACTIVE MATERIAL(S)."

120.239: Exceptions to Posting Requirements

(A) A licensee or registrant is not required to post caution signs in areas or rooms containing radioactive materials for periods of less than eight hours, if each of the following conditions is met:

(1) the radioactive materials are constantly attended during these periods by an individual who takes the precautions necessary to prevent the exposure of individuals to radioactive materials in excess of the limits established in 105 CMR 120.200; and,

(2) the area or room is subject to the licensee's or registrant's control.

(B) Rooms or other areas in hospitals that are occupied by patients are not required to be posted with caution signs pursuant to 105 CMR 120.242 provided that patient could be released from confinement pursuant to 105 CMR 120.540.

(C) Rooms or other areas in hospitals that are occupied by patients are not required to be posted with caution signs, provided that:

(1) A patient being treated with a permanent implant could be released from confinement pursuant 105 CMR 120.540; or

(2) A patient being treated with a therapeutic radiopharmaceutical could be released from confinement pursuant 105 CMR 120.540.

(D) A room or area is not required to be posted with a caution sign because of the presence of a sealed source provided the radiation level at 30 centimeters from the surface of the sealed source container or housing does not exceed 0.05 mSv (0.005 rem) per hour.

(E) A room or area is not required to be posted with a caution sign because of the presence of radiation machines used solely for diagnosis in the healing arts.

(F) Rooms in hospitals or clinics that are used for teletherapy are exempt from the requirement to post caution signs under 105 CMR 120.238 if:

(1) Access to the room is controlled pursuant to 105 CMR 120.573; and,

(2) Personnel in attendance take necessary precautions to prevent the inadvertent exposure of workers, other patients, and members of the public to radiation in excess of the limits established in 105 CMR 120.200.

120.240: Labeling Containers and Radiation Machines

(A) The licensee shall ensure that each container of licensed material bears a durable, clearly visible label bearing the radiation symbol and the words "CAUTION, RADIOACTIVE MATERIAL" or "DANGER, RADIOACTIVE MATERIAL." The label shall also provide information, such as the radionuclides present, an estimate of the quantity of radioactivity, the date for which the activity is estimated, radiation levels, kinds of materials, and mass enrichment, to permit individuals handling or using the containers, or working in the vicinity of the containers, to take precautions to avoid or minimize exposures.

(B) Each licensee shall, prior to removal or disposal of empty uncontaminated containers to unrestricted areas, remove or deface the radioactive material label or otherwise clearly indicate that the container no longer contains radioactive materials.

(C) Each registrant shall ensure that each radiation machine is labeled in a conspicuous manner which cautions individuals that radiation is produced when it is energized.

120.241: Exemptions to Labeling Requirements

A licensee is not required to label:

(A) containers holding licensed material in quantities less than the quantities listed in 105 CMR 120.297: *Appendix C*; or

(B) containers holding licensed material in concentrations less than those specified in 105 CMR 120.296: *Appendix B*, Table III; or

120.241: continued

(C) containers attended by an individual who takes the precautions necessary to prevent the exposure of individuals in excess of the limits established by 105 CMR 120.200; or

(D) containers when they are in transport and packaged and labeled in accordance with the regulations of the U.S. Department of Transportation[1]; or

(E) containers that are accessible only to individuals authorized to handle or use them, or to work in the vicinity of the containers, if the contents are identified to these individuals by a readily available written record. Examples of containers of this type are containers in locations such as water-filled canals, storage vaults, or hot cells. The record shall be retained as long as the containers are in use for the purpose indicated on the record; or

(F) installed manufacturing or process equipment, such as piping and tanks.

120.242: Procedures for Receiving and Opening Packages

(A) Each licensee or registrant who expects to receive a package containing quantities of radioactive material in excess of a Type A quantity, as defined in 105 CMR 120.772 and 105 CMR 120.795: *Appendix A*, shall make arrangements to receive:

(1) the package when the carrier offers it for delivery; or,

(2) the notification of the arrival of the package at the carrier's terminal and to take possession of the package expeditiously.

(B) Each licensee or registrant shall:

(1) monitor the external surfaces of a labeled package for radioactive contamination unless the package contains only radioactive material in the form of gas or in special form as defined in 105 CMR 120.005;

(2) monitor the external surfaces of a labeled[2] package for radiation levels unless the package contains quantities of radioactive material that are less than or equal to the Type A quantity, as defined in 105 CMR 120.772 and 105 CMR 120.795: *Appendix A*; and

(3) monitor all packages known to contain radioactive material for radioactive contamination and radiation levels if there is evidence of degradation of package integrity, such as packages that are crushed, wet, or damaged.

(C) The licensee or registrant shall perform the monitoring required by 105 CMR 120.242 as soon as practicable after receipt of the package, but not later than three hours after the package is received at the licensee's facility if it is received during the licensee's normal working hours, or if there is evidence of degradation of package integrity, such as a package that is crushed, wet, or damaged. If a package is received after working hours, and has no evidence of degradation of package integrity, the package shall be monitored no later than three hours from the beginning of the next working day.

(D) The licensee or registrant shall immediately notify the final delivery carrier and, by telephone and telegram, mailgram, or facsimile, the Agency when:

(1) removable radioactive surface contamination exceeds the limits of 105 CMR 120.786(J); or

(2) External radiation levels exceed the limit of 105 CMR 120.783.

(E) Each licensee or registrant shall:

(1) establish, maintain, and retain written procedures for safely opening packages in which radioactive material is received; and,

(2) ensure that the procedures are followed and that due consideration is given to special instructions for the type of package being opened.

---

[1] Labeling of packages containing radioactive materials is required by the U.S. Department of Transportation if the amount and type of radioactive material exceeds the limits for an excepted quantity or article as defined and limited by U.S. Department of Transportation regulations 49 CFR 173.403(m) and (w) and 173.424.

[2] Labeled with a Radioactive White I, Yellow II, or Yellow III label as specified in U.S. Department of Transportation regulations 49 CFR 172.403 and 172.436-440.

120.242: continued

(F) Licensees or registrants transferring special form sources in vehicles owned or operated by the licensee to and from a work site are exempt from the contamination monitoring requirements of 105 CMR 120.246(B), but are not exempt from the monitoring requirement in 105 CMR 120.246(B) for measuring radiation levels that ensures that the source is still properly lodged in its shield.

120.243: Vacating Premises

Each licensee, registrant, or person possessing non-exempt sources of radiation shall, no less than 30 days before vacating or relinquishing possession or control of premises which may have been contaminated with radioactive material as a result of his activity, notify the Agency, in writing, of the intent to vacate. When deemed necessary by the Agency, the licensee, registrant, or person possessing non-exempt sources of radiation shall decontaminate the premises in such a manner as the Agency may specify.

RADIOLOGICAL CRITERIA FOR LICENSE TERMINATION

120.244: General Provisions and Scope

The criteria in 105 CMR 120.244 apply to the decommissioning of facilities licensed under 105 CMR 120.100,120.300, 120.500, 120.800 and 120.900.

(A) The criteria in 105 CMR 120.244 does not apply to sites, which have been decommissioned prior to October 6, 2006.

(B) After a site has been decommissioned and the license terminated in accordance with the criteria in 105 CMR 120.244, the Agency will require additional cleanup only if, based on new information, it determines that the criteria of 105 CMR 120.244 were not met and residual radioactivity remaining at the site could result in significant threat to public health and safety.

(C) When calculating TEDE to the average member of the critical group the licensee shall determine the peak annual TEDE dose expected within the first 1000 years after decommissioning.

(D) Specific time limits for completion of the decommissioning process are as specified in 105 CMR 120.132(G).

(1) Licensees shall complete decommissioning of the site or separate building or outdoor area as soon as practicable but not later than 24 months following the initiation of decommissioning.

(2) When decommissioning involves the entire site, the licensee shall request license termination as soon as practicable but not later than 24 months following the initiation of decommissioning.

(E) The Agency may approve a request for an alternative schedule for completion of the decommissioning of the site or separate building or outdoor area, and license termination is appropriate, if the Agency determines that the alternative is warranted.

120.245: Radiological Criteria for Unrestricted Use

A site will be considered acceptable for unrestricted use if the residual radioactivity that is distinguishable from background radiation results in a TEDE to an average member of the critical group that shall not exceed 0.10 mSv (10 mrem) per year, including that from groundwater sources of drinking water and the residual radioactivity has been reduced to levels that are as low as reasonably achievable (ALARA). Determination of the levels, which are ALARA, must take into account consideration of any detriments, such as deaths from transportation accidents, expected to potentially result from decontamination and waste disposal.

120.246: Criteria for License Termination Under Restricted Conditions

A site will be considered acceptable for license termination under restricted conditions if:

120.246: continued

(A) The licensee can demonstrate that further reductions in residual radioactivity necessary to comply with the provisions of 105 CMR 120.245 would result in net public or environmental harm or were not being made because the residual levels associated with restricted conditions are ALARA. Determination of the levels, which are ALARA must take into account consideration of any detriments, such as deaths from transportation accidents, expected to potentially result from decontamination and waste disposal;

(B) The licensee has made provisions for legally enforceable institutional controls that provide reasonable assurance that TEDE from residual radioactivity distinguishable from background to the average member of the critical group will not exceed 0.10 mSv (10 mrem) per year;

(C) The licensee has provided sufficient financial assurance to enable an independent third party, including a governmental custodian of a site, to assume and carry out responsibilities for any necessary control and maintenance of the site. Acceptable financial assurance mechanisms are:

(1) Funds placed into an account segregated from the licensee's assets and outside the licensee's administrative control as described in 105 CMR 120.125(C)(1)(f)1.;

(2) Surety method, insurance, or other guarantee method as described in 105 CMR 120.125(C)(1)(f)2.;

(3) A statement of intent in the case of State, or local Government licensees, as described in 105 CMR 120.125(C)(1)(f)4.; or

(4) When a governmental entity is assuming custody and ownership of a site, an arrangement that is deemed acceptable by such governmental entity.

(D) The licensee has submitted a decommissioning plan or License Termination Plan (LTP) to the Agency indicating the licensee's intent to decommission in accordance with 105 CMR 120.132(D), and specifying that the licensee intends to decommission by restricting use of the site. The licensee shall document in the LTP or decommissioning plan how the advice of individuals and institutions in the community who may be affected by the decommissioning has been sought and incorporated, as appropriate, following analysis of that advice.

(1) Licensees proposing to decommission by restricting use of the site shall seek advice from such affected parties regarding the following matters concerning the proposed decommissioning:

(a) Whether provisions for institutional controls proposed by the licensee:

1. Will provide reasonable assurance that the TEDE from residual radioactivity distinguishable from background to the average member of the critical group will not exceed 0.10 mSv (10 mrem) TEDE per year;

2. Will be enforceable; and

3. Will not impose undue burdens on the local community or other affected parties.

(b) Whether the licensee has provided sufficient financial assurance to enable a third party, including a governmental custodian of a site, to assume and carry out responsibilities for any necessary control and maintenance of the site;

(2) In seeking advice on the issues identified in 105 CMR 120.246D(1), the licensee shall provide for:

(a) Participation by representatives of a broad cross section of community interests who may be affected by the decommissioning;

(b) An opportunity for a comprehensive, collective discussion on the issues by the participants represented; and,

(c) A publicly available summary of the results of all such discussions, including a description of the individual viewpoints of the participants on the issues and the extent of agreement and disagreement among the participants on the issues; and

(E) Residual radioactivity at the site has been reduced so that if the institutional controls were no longer in effect, there is reasonable assurance that the TEDE from residual radioactivity distinguishable from background to the average member of the critical group is as low as reasonably achievable and would not exceed either:

(1) 1mSv (100 mrem) per year; or

(2) 5mSv (500 mrem) per year provided the licensee:

(a) Demonstrates that further reductions in residual radioactivity necessary to comply with the one mSv/yr (100 mrem/yr) value of 105 CMR 120.246(E)(1) are not technically achievable, would be prohibitively expensive, or would result in net public or environmental harm;

120.246: continued

(b) Makes provisions for durable institutional controls;
(c) Provides sufficient financial assurance to enable a responsible government entity or independent third party, including a governmental custodian of a site, both to carry out periodic rechecks of the site no less frequently than every three years to assure that the institutional controls remain in place as necessary to meet the criteria of 105 CMR 120.246(B) and to assume and carry out responsibilities for any necessary control and maintenance of those controls. Acceptable financial assurance mechanisms are those in 105 CMR 120.246(C).

120.247: Alternate Criteria for License Termination

(A) The Agency may terminate a license using alternate criteria greater than the dose criterion of 105 CMR 120.245, 120.246(B), and 120.246(D)(1)(a)1., if the licensee:
(1) Provides assurance that public health and safety would continue to be protected, and that it is unlikely that the dose from all man-made sources combined, other than medical, would be more than the one mSv/y (100 mrem/y) limit, by submitting an analysis of possible sources of exposure;
(2) Has employed to the extent practical restrictions on the site use according to the provisions of 105 CMR 120.246 in minimizing exposures at the site; and,
(3) Reduces doses to ALARA levels, taking into consideration any detriments such as traffic accidents expected to potentially result from decontamination and waste disposal.
(4) Has submitted a decommissioning plan or License Termination Plan (LTP) to the Agency indicating the licensee's intent to decommission in accordance with 105 CMR 120.132(D), and specifying that the licensee proposes to decommission by use of alternate criteria. The licensee shall document in the decommissioning plan or LTP how the advice of individuals and institutions in the community who may be affected by the decommissioning has been sought and addressed, as appropriate, following analysis of that advice. In seeking such advice, the license shall provide for:
(a) Participation by representatives of a broad cross section of community interests who may be affected by the decommissioning;
(b) An opportunity for a comprehensive, collective discussion on the issues by the participants represented; and,
(c) A publicly available summary of the results of all such discussions, including a description of the individual viewpoints of the participants on the issues and the extent of agreement and disagreement among the participants on the issues.

(B) The use of alternate criteria to terminate a license requires the approval of the Agency after consideration of the Agency's staff's recommendations that will address any comments by other appropriate agencies and any public comments submitted pursuant to 105 CMR 120.248.

120.248: Public Notification and Public Participation

Upon the receipt of an LTP or decommissioning plan from the licensee, or a proposal by the licensee for release of a site pursuant to 105 CMR 120.246 and 120.247, or whenever the Agency deems such notice to be in the public interest, the Agency shall:

(A) Notify and solicit comments from:
(1) Local governments in the vicinity of the site and any Indian Nation or other indigenous people that have treaty or statutory rights that could be affected by the decommissioning; and
(2) Other appropriate agencies for cases where the licensee proposes to release a site pursuant to 105 CMR 120.247.

(B) Publish a notice in a forum, such as local newspapers, letters to State or local organizations, or other appropriate forum, that is readily accessible to individuals in the vicinity of the site, and solicit comments from affected parties.

120.249: Minimization of Contamination

Applicants for licenses, after July 1, 1999, shall describe in the application how facility design and procedures for operation will minimize, to the extent practicable, contamination of the facility and the environment, facilitate eventual decommissioning, and minimize, to the extent practicable, the generation of radioactive waste.

120.251: General Requirements

(A) Unless otherwise exempted, a licensee shall transfer waste containing licensed material for disposal, discharge or decay only:
(1) by transfer to an authorized recipient as provided in 105 CMR 120.256 or in 105 CMR 120.100, or 105 CMR 120.800, or to the U.S. Department of Energy;
(2) by decay in storage;
(3) by release in effluents within the limits in 105 CMR 120.221; or,
(4) as authorized pursuant to 105 CMR 120.253 or 120.254.

(B) A person shall be specifically licensed to receive waste containing licensed material from other persons for:
(1) treatment prior to disposal;
(2) treatment by incineration;
(3) decay in storage;
(4) disposal at a land disposal facility licensed pursuant to 105 CMR 120.800; or,
(5) storage until transferred to a storage or disposal facility authorized to receive the waste.

120.252: Method for Obtaining Approval of Proposed Disposal Procedures

A licensee or registrant or applicant for a license or registration may apply to the Agency for approval of proposed procedures, not otherwise authorized in these regulations, to dispose of licensed or registered material generated in the licensee's or registrant's operations. Each application shall include:

(A) A description of the waste containing licensed or registered material to be disposed of, including the physical and chemical properties that have an impact on risk evaluation, and the proposed manner and conditions of waste disposal;

(B) An analysis and evaluation of pertinent information on the nature of the environment;

(C) The nature and location of other potentially affected facilities; and,

(D) Analyses and procedures to ensure that doses are maintained ALARA and within the dose limits in 105 CMR 120.200.

120.253: Discharge by Release into Sanitary Sewerage

(A) A licensee may discharge licensed material into sanitary sewerage if each of the following conditions is satisfied:
(1) the material is readily soluble, or is readily dispersible biological material, in water;
(2) the quantity of licensed radioactive material that the licensee releases into the sewer in one month divided by the average monthly volume of water released into the sewer by the licensee does not exceed the concentration listed in 105 CMR 120.296: *Appendix B*, Table III; and
(3) if more than one radionuclide is released, the following conditions must also be satisfied:
(a) the licensee shall determine the fraction of the limit in 105 CMR 120.296: *Appendix B*, Table III represented by discharges into sanitary sewerage by dividing the actual monthly average concentration of each radionuclide released by the licensee into the sewer by the concentration of that radionuclide listed in 105 CMR 120.296: *Appendix B*, Table III; and
(b) the sum of the fractions for each radionuclide required by 105 CMR 120.253(A)(3)(a) does not exceed unity; and
(4) the total quantity of licensed or other radioactive material that the licensee releases into the sanitary sewerage in a year does not exceed five curies (185 gigabecquerels) of hydrogen-3, one curie (37 gigabecquerels) of carbon-14, and one curie (37 gigabecquerels) of all other radioactive materials combined.

(B) Excreta from individuals undergoing medical diagnosis or therapy with radioactive material are not subject to the limitations contained in 105 CMR 120.253(A).

120.254: Treatment or Disposal by Incineration

A licensee may treat licensed material by incineration only in the form and concentration specified in 105 CMR 120.255 or as specifically approved by the Agency pursuant to 105 CMR 120.252.

120.255: Disposal of Specific Wastes

(A) A licensee or registrant may dispose of the following licensed or registered material as if it were not radioactive:

(1) 1.85 kBq (0.05 µCi), or less, of hydrogen-3 or carbon-14 per gram of medium used for liquid scintillation counting; and

(2) 1.85 kBq (0.05 µCi), or less, of hydrogen-3 or carbon-14 per gram of animal tissue, averaged over the weight of the entire animal.

(B) A licensee or registrant shall not dispose of tissue pursuant to 105 CMR 120.255(A)(2) in a manner that would permit its use either as food for humans or as animal feed.

(C) The licensee or registrant shall maintain records in accordance with 105 CMR 120.269.

120.256: Transfer for Disposal and Manifests

(A) The requirements of 105 CMR 120.256 and Appendix G to 10 CFR 20, herein incorporated into 105 CMR120.256 by reference are designed to:

(1) Control transfers of low-level waste by any waste generator, waste collector, or waste processor licensee, as defined in Appendix G to 10 CFR 20, who ships low-level waste either directly, or indirectly through a waste collector or waste processor, to a licensed low-level waste land disposal facility as defined in 105 CMR 120.803;

(2) Establish a manifest tracking system; and

(3) Supplement existing requirements concerning transfers and recordkeeping for those wastes.

(B) (1) Any licensee shipping radioactive waste intended for ultimate disposal at a licensed land disposal facility must document the information required on the U.S. Nuclear Regulatory Commission's Uniform Low-Level Radioactive Waste Manifest and transfer this recorded information to the intended consignee in accordance with Appendix G to 10 CFR 20.

(2) Any licensee shipping byproduct material as defined in 105 CMR 120.005: Byproduct Material(2) and (3) intended for ultimate disposal at a land disposal facility licensed under 105 CMR 120.800 or equivalent NRC or Agreement State regulations must document the information required on the NRC's Uniform Low-Level Radioactive Waste Manifest and transfer this recorded manifest information to the intended consignee in accordance with Appendix G of 10 CFR Part 20.

(C) Each shipment manifest shall include a certification by the waste generator as specified in Appendix G to 10 CFR 20.

(D) Each person involved in the transfer of waste for disposal or in the disposal of waste, including the waste generator, waste collector, and waste processor, shall comply with the requirements specified in 105 CMR 120.256 and Appendix to 10 CFR 20 as appropriate.

(E) Reports and notifications required to be made to the nearest NRC regional administrator by Appendix G to 10 CFR 20 shall, instead, be made to the Agency.

120.257: Compliance with Environmental and Health Protection Regulations

Nothing in 105 CMR 120.251, 120.253, 20.254, or 120.256 relieves the licensee from complying with other applicable federal, state and local regulations governing any other toxic or hazardous properties of materials that may be disposed of in accordance with 105 CMR 120.251, 120.253, 120.254, or 120.256.

120.258: Disposal of Certain Byproduct Material

(A) Licensed material as defined in 105 CMR 120.005: Byproduct Material(2) and (3) may be disposed of in accordance with 105 CMR 120.800, even though it is not defined as low-level radioactive waste. Therefore, any licensed byproduct material being disposed of at a facility, or transferred for ultimate disposal at a facility licensed under 105 CMR 120.800 or equivalent Nuclear Regulatory Commission or Agreement State requirements, must meet the requirements of 105 CMR 120.256.

(B) A licensee may dispose of byproduct material, as defined in 105 CMR 120.005: Byproduct Material(2) and (3), at a disposal facility authorized to dispose of such material in accordance with any Federal or State solid or hazardous waste law, including the Solid Waste Disposal Act, as authorized under the Energy Policy Act of 2005.

RECORDS

120.261: General Provisions

(A) Each licensee or registrant shall use the SI units becquerel, gray, sievert and coulomb per kilogram, or the special units curie, rad, rem and roentgen, including multiples and subdivisions, and shall clearly indicate the units of all quantities on records required by 105 CMR 120.261.

(B) Not withstanding the requirements of 105 CMR 120.261(A), when recording information on shipment manifests, as required in 105 CMR 120.256, information must be recorded in SI units or in SI units and special units as specified in 105 CMR 120.261(A).

(C) The licensee or registrant shall make a clear distinction among the quantities entered on the records required by 105 CMR 120.200, such as, total effective dose equivalent, total organ dose equivalent, shallow dose equivalent, lens dose equivalent, deep dose equivalent, or committed effective dose equivalent.

120.262: Records of Radiation Protection Programs

(A) Each licensee or registrant shall maintain records of the radiation protection program, including:

(1) the provisions of the program; and,
(2) audits and other reviews of program content and implementation.

(B) The licensee or registrant shall retain the records required by 105 CMR 120.262(A)(1) until the Agency terminates each pertinent license or registration requiring the record. The licensee or registrant shall retain the records required by 105 CMR 120.262(A)(2) for three years after the record is made.

120.263: Records of Surveys

(A) Each licensee or registrant shall maintain records showing the results of surveys and calibrations required by 105 CMR 120.225 and 120.242(B). The licensee or registrant shall retain these records for three years after the record is made.

(B) The licensee or registrant shall retain each of the following records until the Agency terminates each pertinent license or registration requiring the record:

(1) records of the results of surveys to determine the dose from external sources of radiation used, in the absence of or in combination with individual monitoring data, in the assessment of individual dose equivalents;
(2) records of the results of measurements and calculations used to determine individual intakes of radioactive material and used in the assessment of internal dose;
(3) records showing the results of air sampling, surveys, and bioassays required pursuant to 105 CMR 120.233(A)(3)(a) and (b); and,
(4) records of the results of measurements and calculations used to evaluate the release of radioactive effluents to the environment.

120.264: Records of Tests for Leakage or Contamination of Sealed Sources

Records of tests for leakage or contamination of sealed sources required by 105 CMR 120.223 shall be kept in units of becquerel or microcurie and maintained for inspection by the Agency for five years after the records are made.

120.265: Determination and Records of Prior Occupational Dose

(A) For each individual who is likely to receive, in a year, an occupational dose requiring monitoring pursuant to 105 CMR 120.226, the licensee or registrant shall:

(1) Determine the occupational radiation dose received during the current year; and

(2) Attempt to obtain the records of cumulative occupational radiation dose.

(B) Prior to permitting an individual to participate in a planned special exposure, the licensee or registrant shall determine:

(1) The internal and external doses from all previous planned special exposures; and

(2) All doses in excess of the limits, including doses received during accidents and emergencies, received during the lifetime of the individual; and

120.265: continued

(C) In complying with the requirements of 105 CMR 120.265(A), a licensee or registrant may:
(1) Accept, as a record of the occupational dose that the individual received during the current year, a written signed statement from the individual, or from the individual's most recent employer for work involving radiation exposure, that discloses the nature and the amount of any occupational dose that the individual received during the current year;
(2) Accept, as the record of cumulative radiation dose, an up-to-date Agency Form MRCP 120.200-2 or equivalent, signed by the individual and countersigned by an appropriate official of the most recent employer for work involving radiation exposure, or the individual's current employer, if the individual is not employed by the licensee or registrant; and
(3) Obtain reports of the individual's dose equivalent(s) from the most recent employer for work involving radiation exposure, or the individual's current employer, if the individual is not employed by the licensee or registrant, by telephone, telegram, facsimile, other electronic media or letter. The licensee or registrant shall request a written verification of the dose data if the authenticity of the transmitted report cannot be established.

(D) The licensee or registrant shall record the exposure history, as required by 105 CMR 120.265(A), on Agency Form MRCP 120.200-2, or other clear and legible record, of all the information required on that form.
(1) The form or record shall show each period in which the individual received occupational exposure to radiation or radioactive material and shall be signed by the individual who received the exposure. For each period for which the licensee or registrant obtains reports, the licensee or registrant shall use the dose shown in the report in preparing Agency Form MRCP 120.200-2 or equivalent. For any period in which the licensee or registrant does not obtain a report, the licensee or registrant shall place a notation on Agency Form Y or equivalent indicating the periods of time for which data are not available.
(2) For the purposes of complying with this requirement, licensees or registrants are not required to partition historical dose between external dose equivalent(s) and internal committed dose equivalent(s). Further, occupational exposure histories obtained and recorded on Agency Form MRCP 120.200-2 or equivalent before October 6, 2006, would not have included effective dose equivalent, but may be used in the absence of specific information on the intake of radionuclides by the individual.

(E) If the licensee or registrant is unable to obtain a complete record of an individual's current and previously accumulated occupational dose, the licensee or registrant shall assume:
(1) In establishing administrative controls pursuant to 105 CMR 120.211(F) for the current year, that the allowable dose limit for the individual is reduced by 12.5 millisievert (1.25 rem) for each quarter for which records were unavailable and the individual was engaged in activities that could have resulted in occupational radiation exposure; and
(2) That the individual is not available for planned special exposures.

(F) The licensee or registrant shall retain the records on Agency Form MRCP 120.200-2 or equivalent until the Agency terminates each pertinent license or registration requiring this record. The licensee or registrant shall retain records used in preparing Agency Form MRCP 120.200-2 or equivalent for three years after the record is made.

(G) Upon termination of the license or registration, the licensee or registrant shall permanently store records on Agency Form MRCP 120.200-2 or equivalent, or shall make provision with the Agency for transfer to the Agency.

120.266: Records of Planned Special Exposures

(A) For each use of the provisions of 105 CMR 120.216 for planned special exposures, the licensee or registrant shall maintain records that describe:
(1) the exceptional circumstances requiring the use of a planned special exposure;
(2) the name of the management official who authorized the planned special exposure and a copy of the signed authorization;
(3) what actions were necessary;
(4) why the actions were necessary;
(5) what precautions were taken to assure that doses were maintained ALARA;
(6) what individual and collective doses were expected to result; and,
(7) the doses actually received in the planned special exposure.

120.266: continued

(B) The licensee or registrant shall retain the records until the Agency terminates each pertinent license or registration requiring these records.

120.267: Records of Individual Monitoring Results

(A) Recordkeeping Requirement. Each licensee or registrant shall maintain records of doses received by all individuals for whom monitoring was required pursuant to 105 CMR 120.226, and records of doses received during planned special exposures, accidents, and emergency conditions. Assessments of dose equivalent and records made using units in effect before January 1, 1994 need not be changed. These records shall include, when applicable:

(1) the deep dose equivalent to the whole body, lens dose equivalent, shallow dose equivalent to the skin, and shallow dose equivalent to the extremities;
(2) the estimated intake of radionuclides, see 105 CMR 120.212;
(3) the committed effective dose equivalent assigned to the intake of radionuclides;
(4) the specific information used to calculate the committed effective dose equivalent pursuant to 105 CMR 120.214(A) and 120.214(C) and when required 105 CMR 120.226;
(5) the total effective dose equivalent when required by 105 CMR 120.212; and
(6) the total of the deep dose equivalent and the committed dose to the organ receiving the highest total dose.

(B) Recordkeeping Frequency. The licensee or registrant shall make entries of the records specified in 105 CMR 120.267(A) at least annually.

(C) Recordkeeping Format. The licensee or registrant shall maintain the records specified in 105 CMR 120.267(A) on Form MRCP 120.200-3, in accordance with the instructions for Form MRCP 120.200-3, or in clear and legible records containing all the information required by Form MRCP 120.200-3.

(D) The licensee or registrant shall maintain the records of dose to an embryo/fetus with the records of dose to the declared pregnant woman. The declaration of pregnancy, including the estimated date of conception, shall also be kept on file, but may be maintained separately from the dose records.

(E) The licensee or registrant shall retain each required form or record until the Agency terminates each pertinent license or registration requiring the record.

(F) Upon termination of the license or registration, the records of doses received by individuals shall be transferred to the Agency.

120.268: Records of Dose to Individual Members of the Public

(A) Each licensee or registrant shall maintain records sufficient to demonstrate compliance with the dose limit for individual members of the public. *See* 105 CMR 120.221.

(B) The licensee or registrant shall retain the records required by 105 CMR 120.268(A) until the Agency terminates each pertinent license or registration requiring the record.

120.269: Records of Waste Transfers

(A) Each licensee shall maintain records of the disposal of licensed materials made pursuant to 105 CMR 120.252, 105 CMR 120.253, 105 CMR 120.254, 105 CMR 120.255, and 105 CMR 120.800.

(B) The licensee shall retain the records required by 105 CMR 120.269(A) until the Agency terminates each pertinent license requiring the record.

(C) If any burials of licensed material were made under the provisions of 10 CFR 20.304 prior to its repeal in 1981 the records of such burials shall be maintained by the licensee.

120.270: Records of Testing Entry Control Devices for Very High Radiation Areas

(A) Each licensee or registrant shall maintain records of tests made pursuant to 105 CMR 120.229(B)(9) on entry control devices for very high radiation areas. These records must include the date, time, and results of each such test of function.

(B) The licensee or registrant shall retain the records required by 105 CMR 120.270(A) for three years after the record is made.

120.271: Form of Records

Each record required by 105 CMR 120.200 shall be legible throughout the specified retention period. The record shall be the original or a reproduced copy or a microform, provided that the copy or microform is authenticated by authorized personnel and that the microform is capable of producing a clear copy throughout the required retention period or the record may also be stored in electronic media with the capability for producing legible, accurate, and complete records during the required retention period. Records, such as letters, drawings, and specifications, shall include all pertinent information, such as stamps, initials, and signatures. The licensee or registrant shall maintain adequate safeguards against tampering with and loss of records.

120.273: Records of Tests for Leakage or Contamination of Sealed Sources

Records of tests for leakage or contamination of sealed sources required by 105 CMR 120.223 shall be kept in units of becquerel or microcurie and maintained for inspection by the Agency for five years after the records are made.

REPORTS

120.281: Reports of Stolen, Lost, or Missing Licensed or Registered Sources of Radiation

(A) Telephone Reports. Each licensee or registrant shall report to the Agency by telephone as follows:

(1) immediately after its occurrence becomes known to the licensee, stolen, lost, or missing licensed radioactive material in an aggregate quantity equal to or greater than 1,000 times the quantity specified in 105 CMR 120.297: *Appendix C*, under such circumstances that it appears to the licensee that an exposure could result to individuals in unrestricted areas;

(2) within 30 days after its occurrence becomes known to the licensee, lost, stolen, or missing licensed radioactive material in an aggregate quantity greater than ten times the quantity specified in 105 CMR 120.297: *Appendix C* that is still missing;

(3) immediately after its occurrence becomes known to the registrant, a stolen, lost, or missing radiation machine.

(B) Written Reports. Each licensee or registrant required to make a report pursuant to 105 CMR 120.281(A) shall, within 30 days after making the telephone report, make a written report to the Agency setting forth the following information:

(1) a description of the licensed or registered source of radiation involved, including, for radioactive material, the kind, quantity, and chemical and physical form; and, for radiation machines, the manufacturer, model and serial number, type and maximum energy of radiation emitted;

(2) a description of the circumstances under which the loss or theft occurred;

(3) a statement of disposition, or probable disposition, of the licensed or registered source of radiation involved;

(4) exposures of individuals to radiation, circumstances under which the exposures occurred, and the possible total effective dose equivalent to persons in unrestricted areas;

(5) actions that have been taken, or will be taken, to recover the source of radiation; and,

(6) procedures or measures that have been, or will be, adopted to ensure against a recurrence of the loss or theft of licensed or registered sources of radiation.

(C) Subsequent to filing the written report, the licensee or registrant shall also report additional substantive information on the loss or theft within 30 days after the licensee or registrant learns of such information.

120.281: continued

(D) The licensee or registrant shall prepare any report filed with the Agency pursuant to 105 CMR 120.281 so that names of individuals who may have received exposure to radiation are stated in a separate and detachable portion of the report.

120.282: Notification of Incidents

(A) Immediate Notification. Notwithstanding any other requirements for notification, each licensee or registrant shall immediately report each event involving a source of radiation possessed by the licensee or registrant that may have caused or threatens to cause any of the following conditions:

(1) An individual to receive:

(a) a total effective dose equivalent of 0.25 sievert (25 rems) or more;

(b) a lens dose equivalent of 0.75 sievert (75 rems) or more;

(c) a shallow dose equivalent to the skin or extremities or a total organ dose equivalent of 2.5 grays (250 rads) or more; or

(2) The release of radioactive material, inside or outside of a restricted area, so that, had an individual been present for 24 hours, the individual could have received an intake five times the occupational ALI. This provision does not apply to locations where personnel are not normally stationed during routine operations, such as hot-cells or process enclosures.

(B) 24 Hour Notification. Each licensee or registrant shall, within 24 hours of discovery of the event, report to the Agency each event involving loss of control of a licensed or registered source of radiation possessed by the licensee or registrant that may have caused, or threatens to cause, any of the following conditions:

(1) An individual to receive, in a period of 24 hours:

(a) a total effective dose equivalent exceeding 0.05 sievert (five rems);

(b) a lens dose equivalent exceeding 0.15 sievert (15 rems);

(c) a shallow dose equivalent to the skin or extremities or a total organ dose equivalent exceeding 0.5 sievert (50 rems); or

(2) The release of radioactive material, inside or outside of a restricted area, so that, had an individual been present for 24 hours, the individual could have received an intake in excess of one occupational ALI. This provision does not apply to locations where personnel are not normally stationed during routine operations, such as hot-cells or process enclosures.

(C) Licensees or registrants shall make the reports required by 105 CMR 120.282(A) and (B) by initial contact by telephone to the Agency and shall confirm the initial contact by telegram, mailgram, or facsimile to the Agency.

(D) The licensee or registrant shall prepare each report filed with the Agency pursuant to 105 CMR 120.282 so that names of individuals who have received exposure to sources of radiation are stated in a separate and detachable portion of the report.

(E) The provisions of 105 CMR 120.282 do not apply to doses that result from planned special exposures, provided such doses are within the limits for planned special exposures and are reported pursuant to 105 CMR 120.284.

120.283: Reports of Exposures, Radiation Levels, and Concentrations of Radioactive Material Exceeding the Constraints or the Limits

(A) Reportable Events. In addition to the notification required by 105 CMR 120.282, each licensee or registrant shall submit a written report within 30 days after learning of any of the following occurrences:

(1) incidents for which notification is required by 105 CMR 120.282; or

(2) doses in excess of any of the following:

(a) the occupational dose limits for adults in 105 CMR 120.211;

(b) the occupational dose limits for a minor in 105 CMR 120.217;

(c) the limits for an embryo/fetus of a declared pregnant woman in 105 CMR 120.218;

(d) the limits for an individual member of the public in 105 CMR 120.221;

(e) any applicable limit in the license or registration;

(f) the ALARA constraints for air emissions established under 105 CMR 120.210(D); or

120.283: continued

(3) levels of radiation or concentrations of radioactive material in:

(a) a restricted area in excess of applicable limits in the license or registration;

(b) an unrestricted area in excess of ten times the applicable limit set forth in this part or in the license or registration, whether or not involving exposure of any individual in excess of the limits in 105 CMR 120.221; or,

(4) for licensees subject to the provisions of U.S. Environmental Protection Agency's generally applicable environmental radiation standards in 40 CFR 190, levels of radiation or releases of radioactive material in excess of those standards, or of license conditions related to those standards.

(B) Contents of Reports.

(1) Each report required by 105 CMR 120.283(A) shall describe the extent of exposure of individuals to radiation and radioactive material, including, as appropriate:

(a) estimates of each individual's dose;

(b) the levels of radiation and concentrations of radioactive material involved;

(c) the cause of the elevated exposures, dose rates, or concentrations; and,

(d) corrective steps taken or planned to ensure against a recurrence, including the schedule for achieving conformance with applicable limits, ALARA constraints generally applicable environmental standards, and associated license or registration conditions.

(2) Each report filed pursuant to 105 CMR 120.283(A) shall include for each occupationally exposed individual: the name, social security number, and date of birth. With respect to the limit for the embryo/fetus in 105 CMR 120.218: *Dose Equivalent to an Embryo/Fetus*, the identifiers should be those of the declared pregnant woman. The report shall be prepared so that this information is stated in a separate and detachable portion of the report.

(C) All licensees or registrants who make reports pursuant to 105 CMR 120.283(A) shall submit the report in writing to the Agency.

120.284: Reports of Planned Special Exposures

The licensee or registrant shall submit a written report to the Agency within 30 days following any planned special exposure conducted in accordance with 105 CMR 120.216, informing the Agency that a planned special exposure was conducted and indicating the date the planned special exposure occurred and the information required by 105 CMR 120.266.

120.285: Reports to Individuals of Exceeding Dose Limits

When a licensee or registrant is required, pursuant to 105 CMR 120.283 or 120.284 to report to the Agency any exposure of an identified occupationally exposed individual, or an identified member of the public, to radiation or radioactive material, the licensee shall also provide a copy of the report submitted to the Agency to the individual. This report must be transmitted at a time no later than the transmittal to the Agency.

120.286: Reports of Individual Monitoring

(A) The requirements of 105 CMR 120.286 apply to each person licensed or registered by the Agency:

(1) Possess or use sources of radiation for purposes of industrial radiography pursuant to 105 CMR 120.100 and 120.300; or

(2) Possess or use at any time, for processing or manufacturing for distribution pursuant to 105 CMR 120.100 or 120.500, radioactive material in quantities exceeding any one of the following quantities:

120.286: continued

Radionuclide, Activity

Radionuclide	Activity	
	Ci	GBq
Cesium-137	1	37
Cobalt-60	1	37
Gold-198	100	3700
Iodine-131	1	37
Iridium-192	10	370
Krypton-85	1000	37000
Promethium-147	10	370
Technetium-99m	1000	37000

[*Note*: The Agency may require as a license condition, or by rule, regulation, or order pursuant to 105 CMR 120.012, reports from licensees or registrants who are licensed or registered to use radionuclides not on this list, in quantities sufficient to cause comparable radiation levels.]

(B) Each licensee or registrant in a category listed in 105 CMR 120.286(A) shall submit an annual report of the results of individual monitoring carried out by the licensee or registrant for each individual for whom monitoring was required by 105 CMR 120.226 during that year. The licensee or registrant may include additional data for individuals for whom monitoring was provided but not required. The licensee or registrant shall use Agency Form MRCP 120.200-2 or equivalent or electronic media containing all the information required by Agency Form MRCP 120.200-2.

(C) The licensee or registrant shall file the report required by 105 CMR 120.286(A), covering the preceding year, on or before April 30th each year. The licensee or registrant shall submit the report to the Agency.

120.287: Notifications and Reports to Individuals

(A) Requirements for notification and reports to individuals of exposure to radiation or radioactive material are specified in 105 CMR 120.750.

(B) When a licensee or registrant is required pursuant to 105 CMR 120.283 to report to the Agency any exposure of an individual to radiation or radioactive material, the licensee or registrant shall also notify the individual. Such notice shall be transmitted at a time not later than the transmittal to the Agency, and shall comply with the provisions of 105 CMR 120.754(A).

120.288: Reports of Leaking or Contaminated Sealed Sources

The licensee shall immediately notify the Agency if the test for leakage or contamination required pursuant to 105 CMR 120.223 indicates a sealed source is leaking or contaminated. A written report of a leaking or contaminated source shall be submitted to the Agency within five days. The report shall include the equipment involved, the test results and the corrective action taken.

120.290: Reports of Transactions Involving Nationally Tracked Sources

Each licensee who manufactures, transfers, receives, disassembles, or disposes of a nationally tracked source shall complete and submit a National Source Tracking Transaction Report as specified in 105 CMR 120.290(A) through (E) for each type of transaction.

(A) Each licensee who manufactures a nationally tracked source shall complete and submit a National Source TrackingTransaction Report. The report must include the following information:

120.290: continued

(1) The name, address, and license number of the reporting licensee;
(2) The name of the individual preparing the report;
(3) The manufacturer, model, and serial number of the source;
(4) The radioactive material in the source;
(5) The initial source strength in becquerels (curies) at the time of manufacture; and,
(6) The manufacture date of the source.

(B) Each licensee that transfers a nationally tracked source to another person shall complete and submit a National Source Tracking Transaction Report. The report must include the following information:
(1) The name, address, and license number of the reporting licensee;
(2) The name of the individual preparing the report;
(3) The name and license number of the recipient facility and the shipping address;
(4) The manufacturer, model, and serial number of the source or, if not available, other information to uniquely identify the source;
(5) The radioactive material in the source;
(6) The initial or current source strength in becquerels (curies);
(7) The date for which the source strength is reported;
(8) The shipping date;
(9) The estimated arrival date; and
(10) For nationally tracked sources transferred as waste under a Uniform Low-level Radioactive Waste Manifest, the waste manifest number and the container identification of the container with the nationally tracked source.

(C) Each licensee that receives a nationally tracked source shall complete and submit a National Source TrackingTransaction Report. The report must include the following information:
(1) The name, address, and license number of the reporting licensee;
(2) The name of the individual preparing the report;
(3) The name, address, and license number of the person that provided the source;
(4) The manufacturer, model, and serial number of the source or, if not available, other information to uniquely identify the source;
(5) The radioactive material in the source;
(6) The initial or current source strength in becquerels (curies);
(7) The date for which the source strength is reported;
(8) The date of receipt; and
(9) For material received under a Uniform Low-level Radioactive Waste Manifest, the waste manifest number and the container identification with the nationally tracked source.

(D) Each licensee that disassembles a nationally tracked source shall complete and submit a National Source TrackingTransaction Report. The report must include the following information:
(1) The name, address, and license number of the reporting licensee;
(2) The name of the individual preparing the report;
(3) The manufacturer, model, and serial number of the source or, if not available, other information to uniquely identify the source;
(4) The radioactive material in the source;
(5) The initial or current source strength in becquerels (curies);
(6) The date for which the source strength is reported;
(7) The disassemble date of the source.

(E) Each licensee who disposes of a nationally tracked source shall complete and submit a National Source Tracking Transaction Report. The report must include the following information:
(1) The name, address, and license number of the reporting licensee;
(2) The name of the individual preparing the report;
(3) The waste manifest number;
(4) The container identification with the nationally tracked source.
(5) The date of disposal; and
(6) The method of disposal.

120.290: continued

(F) The reports discussed in 105 CMR 120.290(A) through (E) must be submitted by the close of the next business day after the transaction. A single report may be submitted for multiple sources and transactions. The reports must be submitted to the National Source Tracking System by using:

(1) The on-line National Source Tracking System;
(2) Electronically using a computerreadable format;
(3) By facsimile;
(4) By mail to the address on the National Source Tracking Transaction Report Form (NRC Form 748); or
(5) By telephone with followup by facsimile or mail.

(G) Each licensee shall correct any error in previously filed reports or file a new report for any missed transaction within five business days of the discovery of the error or missed transaction. Such errors may be detected by a variety of methods such as administrative reviews or by physical inventories required by regulation. In addition, each licensee shall reconcile the inventory of nationally tracked sources possessed by the licensee against that licensee's data in the National Source Tracking System. The reconciliation must be conducted during the month of January in each year. The reconciliation process must include resolving any discrepancies between the National Source Tracking System and the actual inventory by filing the reports identified by 105 CMR 120.290(A) through (E). By January 31st of each year, each licensee must submit to the National Source Tracking System confirmation that the data in the National Source Tracking System is correct.

(H) Each licensee that possesses Category 1 nationally tracked sources shall report its initial inventory of Category 1 nationally tracked sources to the National Source Tracking System by January 31, 2009. Each licensee that possesses Category 2 nationally tracked sources shall report its initial inventory of Category 2 nationally tracked sources to the National Source Tracking System by January 31, 2009. The information may be submitted by using any of the methods identified by 105 CMR 120.290(F)(1) through (4). The initial inventory report must include the following information:

(1) The name, address, and license number of the reporting licensee;
(2) The name of the individual preparing the report;
(3) The manufacturer, model, and serial number of each nationally tracked source or, if not available, other information to uniquely identify the source;
(4) The radioactive material in the sealed source;
(5) The initial or current source strength in becquerels (curies); and
(6) The date for which the source strength is reported.

120.295: Appendix A – Assigned (APF) Protection Factors for Respirators[a]

	Operating Mode	Assigned Protection Factors
I. Air purifying respirators (Particulate[b] only)[c]		
Filtering faceplate disposable[d]	Negative Pressure	([d])
Facepiece, half[e]	Negative Pressure	10
Facepiece, full	Negative Pressure	100
Facepiece, ...	Powered air-purifying respirators	50
Facepiece, full	Powered air-purifying respirators	1000
Helmet/hood	Powered air-purifying respirators	1000
Facepiece, loosefitting	Powered air-purifying respirators	25
II. Atmosphere suppling respirators (Particulate, gases, and vapors[f])		
1: Air-line Respirator:		
Facepiece, half	Demand	10
Facepiece, half	Continuous Flow	50
Facepiece, half	Pressure Demand	50
Facepiece, full	Demand	100
Facepiece, full	Continuous Flow	1000
Facepiece, full	Pressure Demand	1000
Helmet/hood	Continuous Flow	1000
Facepiece, loose-fitting	Continuous Flow	25
Suit	Continuous Flow	([g])
2: Self-contained breathing apparatus (SCBA):	Demand	[h]100
Facepiece, full	Pressure Demand	[i]10,000
Facepiece, full	Demand, Recirculating	[h]100
Facepiece, full	Positive Pressure Recirculating . .	[i]10,000
Facepiece, full		
III. Combination Respirators: Any combination of air-purifying and atmosphere-supplying respirators	Assigned protection factor for type and mode of operations as listed above	

FOOTNOTES

a. These assigned protection factors apply only in respiratory protection program that meets the requirements of 105 CMR 120.293: *Appendix A.* They are applicable only to airborne radiological hazards and may not be appropriate to circumstances when chemical or other respiratory hazards exist instead of, or in addition to, radioactive hazards. Selection and use of respirators for such circumstances must also comply with Department of Labor regulations. Radioactive contaminants for which the concentration values in 105 CMR 120.296: *Appendix B,* Table 1, column 3 are based on internal dose due to inhalation may, in addition, present external exposure hazards at higher concentrations. Under these circumstances, limitations on occupancy may have to be governed by external dose limits.

b. Air purifying respirators with APF <100 must be equipped with particulate filters that are at least 95% efficient. Air purifying respirators with APF = 100 must be equipped with particulate filters that are at least 99% efficient. Air purifying respirators with APF >100 must be equipped with particulate filters that area t least 99.97% efficient.

c. The licensee may apply to the Agency for the use of an APF greater than one for sorbent cartridges as protection against airborne radioactive gases and vapors (*e.g.*, radioiodine).

FOOTNOTES - continued

d. Licensees may permit individuals to use this type of respirator who have not been medically screened or fit tested on the device provided that no credit be taken for their use in estimating intake or dose. It is also recognized that it is difficult to perform an effective positive or negative pressure pre-use user seal check on this type of device. All other respiratory protection program requirements listed in 105 CMR 120.233 apply. An assigned protection factor has not been assigned for these devices. However, an APF equal to ten may be used if the licensee can demonstrate a fit factor of at least 100 by use of a validated or evaluated, qualitative or quantitative fit test.

e. Under-chin type only. No distinction is made in 105 CMR 120.296: *Appendix A* between elastomeric half-masks with replaceable cartridges and those designed with the filter medium as an integral part of the facepiece (*e.g.*, disposable or reusable disposable). Both types are acceptable so long as the seal area of the latter contains some substantial type of seal enhancing material such as rubber or plastic, the two or more suspension straps are adjustable, the filter medium is at least 95% efficient and all other requirements of 105 CMR 120.298: *Appendix A* are met.

f. The assigned protection factors for gases and vapors are not applicable to radioactive contaminants that present an absorption or submersion hazard. For tritium oxide vapor, approximately ⅓ of the intake occurs by absorption through the skin so that an overall protection factor of three is appropriate when atmosphere-supplying respirators are used to protect against tritium oxide. Exposure to radioactive noble gases is not considered a significant respiratory hazard, and protective actions for these contaminants should be based on external (submersion) dose considerations.

g. No NIOSH approval schedule is currently available for atmospheric supplying units. This equipment may be used in an acceptable respiratory protection program as long as all the other minimum program requirements, with the exception of fit testing, are met (*i.e.*, 105 CMR 120.233).

h. The licensee should implement institutional controls to assure that these devices are not used in areas immediately dangerous to life or health (IDLH).

i. This type of respirator may be used as an emergency device in unknown concentrations for protection against inhalation hazards. External radiation hazards and other limitations to permitted exposure such as skin absorption shall be taken into account in these circumstances. This device may not be used by any individual who experiences perceptible outward leakage of breathing gas while wearing the device.

120.296: Appendix B -- Annual Limits on Intake (ALI) and Derived Air Concentrations (DAC) of Radionuclides for Occupational Exposure; Effluent Concentrations; Concentrations for Release to Sanitary Sewerage

Introduction. For each radionuclide, Table I indicates the chemical form which is to be used for selecting the appropriate ALI or DAC value. The ALIs and DACs for inhalation are given for an aerosol with an activity median aerodynamic diameter (AMAD) of 1 μm, micron, and for three classes (D,W,Y) of radioactive material, which refer to their retention (approximately days, weeks or years) in the pulmonary region of the lung. This classification applies to a range of clearance half-times for D if less than 10 days, for W from 10 to 100 days, and for Y greater than 100 days. The class (D, W, or Y) given in the column headed "Class" applies only to the inhalation ALIs and DACs given in Table I, column 2 and 3. Table II provides concentration limits for airborne and liquid effluents released to the general environment. Table III provides concentration limits for discharges to sanitary sewerage.

Note: The values in Tables I, II, and III are presented in the computer "E" notation. In this notation a value of 6E-02 represents a value of 6×10^{-2} or 0.06, 6E+2 represents $6 \times 1O^{2}$ or 600, and 6E+0 represents 6×10^{0} or 6.

Table I "Occupational Values"

Note that the columns in 105 CMR 120.296: *Appendix B*, Table I captioned "Oral Ingestion ALI," "Inhalation ALI," and "DAC," are applicable to occupational exposure to radioactive material.

The ALIs in 105 CMR 120.296: *Appendix B* are the annual intakes of given radionuclide by "Reference Man" which would result in either (1) a committed effective dose equivalent of 5 rems (0.05 sievert), stochastic ALI, or (2) a committed dose equivalent of 50 rems (0.5 sievert) to an organ or tissue, non-stochastic ALI. The stochastic ALIs were derived to result in a risk, due to irradiation of organs and tissues, comparable to the risk associated with deep dose equivalent to the whole body of five rems (0.05 sievert). The derivation includes multiplying the committed dose equivalent to an organ or tissue by a weighting factor, w_T. This weighting factor is the proportion of the risk of stochastic effects resulting from irradiation of the organ or tissue, T, to the total risk of stochastic effects when the whole body is irradiated uniformly. The values of w_T are listed under the definition of "weighting factor" in 105 CMR 120.203. The non-stochastic ALIs were derived to avoid non-stochastic effects, such as prompt damage to tissue or reduction in organ function.

A value of $w_T = 0.06$ is applicable to each of the five organs or tissues in the "remainder" category receiving the highest dose equivalents, and the dose equivalents of all other remaining tissues may be disregarded. The following portions of the GI tract -- stomach, small intestine, upper large intestine, and lower large intestine -- are to be treated as four separate organs.

Note that the dose equivalents for an extremity, skin and lens of the eye are not considered in computing the committed effective dose equivalent, but are subject to limits that must be met separately.

When an ALI is defined by the stochastic dose limit, this value alone is given. When an ALI is determined by the non-stochastic dose limit to an organ, the organ or tissue to which the limit applies is shown, and the ALI for the stochastic limit is shown in parentheses. Abbreviated organ or tissue designations are used:

LLI wall	=	lower large intestine wall;
St wall	=	stomach wall;
Blad wall	=	bladder wall; and,
Bone surf	=	bone surface.

120.296: continued

The use of the ALIs listed first, the more limiting of the stochastic and non-stochastic ALIs, will ensure that non-stochastic effects are avoided and that the risk of stochastic effects is limited to an acceptably low value. If, in a particular situation involving a radionuclide for which the non-stochastic ALI is limiting, use of that non-stochastic ALI is considered unduly conservative, the licensee may use the stochastic ALI to determine the committed effective dose equivalent. However, the licensee shall also ensure that the 50 rems (0.5 sievert) dose equivalent limit for any organ or tissue is not exceeded by the sum of the external deep dose equivalent plus the internal committed dose equivalent to that organ, not the effective dose. For the case where there is no external dose contribution, this would be demonstrated if the sum of the fractions of the nonstochastic ALIs (ALI_{ns}) that contribute to the committed dose equivalent to the organ receiving the highest dose does not exceed unity, that is, $\sum$ (intake (in μCi) of each radionuclide/ALI_{ns}) $\leq$ 1.0. If there is an external deep dose equivalent contribution of H_d, then this sum must be less than 1 - (H_d/50), instead of $\leq$ 1.0.

Note that the dose equivalents for an extremity, skin, and lens of the eye are not considered in computing the committed effective dose equivalent, but are subject to limits that must be met separately.

The derived air concentration (DAC) values are derived limits intended to control chronic occupational exposures. The relationship between the DAC and the ALI is given by:

DAC = ALI(in μCi)/(2000 hours per working year x 60 minutes/hour x 2 x 10^4 ml per minute) = [ALI/2.4 x 10^9] μCi/ml,

where 2 x 10^4 ml is the volume of air breathed per minute at work by Reference Man under working conditions of light work.

The DAC values relate to one of two modes of exposure: either external submersion or the internal committed dose equivalents resulting from inhalation of radioactive materials. DACs based upon submersion are for immersion in a semi-infinite cloud of uniform concentration and apply to each radionuclide separately.

The ALI and DAC values include contributions to exposure by the single radionuclide named and any in-growth of daughter radionuclides produced in the body by decay of the parent. However, intakes that include both the parent and daughter radionuclides should be treated by the general method appropriate for mixtures.

The values of ALI and DAC do not apply directly when the individual both ingests and inhales a radionuclide, when the individual is exposed to a mixture of radionuclides by either inhalation or ingestion or both, or when the individual is exposed to both internal and external irradiation. See 105 CMR 120.212. When an individual is exposed to radioactive materials which fall under several of the translocation classifications of the same radionuclide, such as, Class D, Class W, or Class Y, the exposure may be evaluated as if it were a mixture of different radionuclides.

It should be noted that the classification of a compound as Class D, W, or Y is based on the chemical form of the compound and does not take into account the radiological half-life of different radionuclides. For this reason, values are given for Class D, W, and Y compounds, even for very short-lived radionuclides.

Table II "Effluent Concentrations". The columns in 105 CMR 120.296: *Appendix B*, Table II captioned "Effluents," "Air" and "Water" are applicable to the assessment and control of dose to the public, particularly in the implementation of the provisions of 105 CMR 120.222. The concentration values given in 105 CMR 120.296: *Appendix B*, Table II, Columns 1 and 2 are equivalent to the radionuclide concentrations which, if inhaled or ingested continuously over the course of a year, would produce a total effective dose equivalent of 0.05 rem (0.5 millisievert).

Consideration of non-stochastic limits has not been included in deriving the air and water effluent concentration limits because non-stochastic effects are presumed not to occur at or below the dose levels established for individual members of the public. For radionuclides, where the non-stochastic limit was governing in deriving the occupational DAC, the stochastic ALI was used in deriving the corresponding airborne effluent limit in Table II. For this reason, the DAC and airborne effluent limits are not always proportional as was the case in the previous Appendix 105 CMR 120.295: *Appendix A*.

120.296: continued

The air concentration values listed in Table II, Column 1 were derived by one of two methods. For those radionuclides for which the stochastic limit is governing, the occupational stochastic inhalation ALI was divided by 2.4×10^9 ml, relating the inhalation ALI to the DAC, as explained above, and then divided by a factor of 300. The factor of 300 includes the following components: a factor of 50 to relate the 5 rems (0.05 sievert) annual occupational dose limit to the one mSv (0.1 rem) limit for members of the public, a factor of three to adjust for the difference in exposure time and the inhalation rate for a worker and that for members of the public; and a factor of two to adjust the occupational values, derived for adults, so that they are applicable to other age groups.

For those radionuclides for which submersion, that is external dose, is limiting, the occupational DAC in 105 CMR 120.296: *Appendix B*, Table I, Column 3 was divided by 219. The factor of 219 is composed of a factor of 50, as described above, and a factor of 4.38 relating occupational exposure for 2,000 hours per year to full-time exposure (8,760 hours per year). Note that an additional factor of 2 for age considerations is not warranted in the submersion case.

The water concentrations were derived by taking the most restrictive occupational stochastic oral ingestion ALI and dividing by 7.3×10^7. The factor of 7.3×10^7 (ml) includes the following components: the factors of 50 and 2 described above and a factor of 7.3×10^5 (ml) which is the annual water intake of "Reference Man".

Note 2 of 105 CMR 120.296: *Appendix B* provides groupings of radionuclides which are applicable to unknown mixtures of radionuclides. These groupings, including occupational inhalation ALIs and DACs, air and water effluent concentrations and releases to sewer, require demonstrating that the most limiting radionuclides in successive classes are absent. The limit for the unknown mixture is defined when the presence of one of the listed radionuclides cannot be definitely excluded as being present either from knowledge of the radionuclide composition of the source or from actual measurements.

Table III "Releases to Sewers". The monthly average concentrations for release to sanitary sewerage are applicable to the provisions in 105 CMR 120.253. The concentration values were derived by taking the most restrictive occupational stochastic oral ingestion ALI and dividing by 7.3×10^6 (ml). The factor of 7.3×10^6 (ml) is composed of a factor of 7.3×10^5 (ml), the annual water intake by "Reference Man", and a factor of ten, such that the concentrations, if the sewage released by the licensee were the only source of water ingested by a "Reference Man" during a year, would result in a committed effective dose equivalent of five mSv (0.5 rem).

120.296: continued

List of Elements

Name	Symbol	Atomic No.	Name	Symbol	Atomic No.
Actinium	Ac	89	Molybdenum	Mo	42
Aluminium	Al	13	Neodymium	Nd	60
Americium	Am	95	Neptunium	Np	93
Antimony	Sb	51	Nickel	Ni	28
Argon	Ar	18	Niobium	Nb	41
Arsenic	As	33	Nitrogen	N	7
Astatine	At	85	Osmium	Os	76
Barium	Ba	56	Oxygen	O	8
Berkelium	Bk	97	Palladium	Pd	46
Beryllium	Be	4	Phosphorus	P	15
Bismuth	Bi	83	Platinum	Pt	78
Bromine	Br	35	Plutonium	Pu	94
Cadmium	Cd	48	Polonium	Po	84
Calcium	Ca	20	Potassium	K	19
Californium	Cf	98	Praseodymium	Pr	59
Carbon	C	6	Promethium	Pm	61
Cerium	Ce	58	Protactinium	Pa	91
Cesium	Cs	55	Radium	Ra	88
Chlorine	Cl	17	Radon	Rn	86
Chromium	Cr	24	Rhenium	Re	75
Cobalt	Co	27	Rhodium	Rh	45
Copper	Cu	29	Rubidium	Rb	37
Curium	Cm	96	Ruthenium	Ru	44
Dysprosium	Dy	66	Samarium	Sm	62
Einsteinium	Es	99	Scandium	Sc	21
Erbium	Er	68	Selenium	Se	34
Europium	Eu	63	Silicon	Si	14
Femium	Fm	100	Silver	Ag	47
Fluorine	F	9	Sodium	Na	11
Francium	Fr	87	Strontium	Sr	38
Gadolinium	Gd	64	Sulfur	S	16
Gallium	Ga	31	Tantalum	Ta	73
Germanium	Ge	32	Technetium	Tc	43
Gold	Au	79	Tellurium	Te	52
Hafnium	Hf	72	Terbium	Tb	65
Holmium	Ho	67	Thallium	Tl	81
Hydrogen	H	1	Thorium	Th	90
Indium	In	49	Thulium	Tm	69
Iodine	I	53	Tin	Sn	50
Iridium	Ir	77	Titanium	Ti	22
Iron	Fe	26	Tungsten	W	74
Krypton	Kr	36	Uranium	U	92
Lanthanum	La	57	Vanadium	V	23
Lead	Pb	82	Xenon	Xe	54
Lutetium	Lu	71	Ytterbium	Yb	70
Magnesium	Mg	12	Yttrium	Y	39
Manganese	Mn	25	Zinc	Zn	30
Mendelevium	Md	101	Zirconium	Zr	40
Mercury	Hg	80			

120.296: continued

			Table I Occupational Values			Table II Effluent Concentrations		Table III Releases to Sewers
			Col. 1	Col. 2	Col. 3	Col. 1	Col. 2	
			oral Ingestion	Inhalation				Monthly Average
Atomic No.	Radionuclide	Class	ALI (µCi)	ALI (µCi)	DAC (µCi/ml)	Air (µCi/ml)	Water (µCi/ml)	Concen-tration (µCi/ml)
1	Hydrogen-3	Water, DAC includes skin absorption	8E+4	8E+4	2E-5	1E-7	1E-3	1E-2
		Gas (HT or T_2) Submersion[1]: Use above values as HT and T_2 oxidize in air and in the body to HTO.						
4	Beryllium-7	W, all compounds except those given for Y	4E+4	2E+4	9E-6	3E-8	6E-4	6E-3
		Y, oxides, halides, and nitrates	=	2E+4	8E-6	3E-8	=	=
4	Beryllium-10	W, see ^{7}Be	1E+3	2E+2	6E-8	2E-10	=	=
			LLI wall (1E+3)	=	=	=	2E-5	2E-4
		Y, see ^{7}Be	=	1E+1	6E-9	2E-11	=	=
6	Carbon-11[2]	Monoxide	=	1E+6	5E-4	2E-6	=	=
		Dioxide	=	6E+5	3E-4	9E-7	=	=
		Compounds	4E+5	4E+5	2E-4	6E-7	6E-3	6E-2
6	Carbon-14	Monoxide	=	2E+6	7E-4	2E-6	=	=
		Dioxide	=	2E+5	9E-5	3E-7		
		Compounds	2E+3	2E+3	1E-6	3E-9	3E-5	3E-4
7	Nitrogen-13[2]	Submersion[1]	=	=	4E-6	2E-8		
8	Oxygen-15[2]	Submersion[1]	=	=	4E-6	2E-8		
9	Fluorine-18[2]	D, fluorides of H, Li, Na, K, Rb, Cs, and Fr	5E+4	7E+4	3E-5	1E-7	=	=
			St wall (5E+4)	=	=	=	7E-4	7E-3
		W, fluorides of Be, Mg, Ca, Sr, Ba, Ra, Al, Ga, In, Tl, As, Sb, Bi, Fe, Ru, Os, Co, Ni, Pd, Pt, Cu, Ag, Au, Zn, Cd, Hg, Sc, Y, Ti, Zr, V, Nb, Ta, Mn, Tc, and Re	=	9E+4	4E-5	1E-7	=	=
		Y, lanthanum fluoride	=	8E+4	3E-5	1E-7	=	=
11	Sodium-22	D, all compounds	4E+2	6E+2	3E-7	9E-10	6E-6	6E-5
11	Sodium-24	D, all compounds	4E+3	5E+3	2E-6	7E-9	5E-5	5E-4
12	Magnesium-28	D, all compounds except those given for W	7E+2	2E+3	7E-7	2E-9	9E-6	9E-5
		W, oxides, hydroxides, carbides, halides, and nitrates	=	1E+3	5E-7	2E-9	=	=
13	Aluminum-26	D, all compounds except those given for W	4E+2	6E+1	3E-8	9E-11	6E-6	6E-5
		W, oxides, hydroxides, carbides, halides, and nitrates	=	9E+1	4E-8	1E-10	=	=
14	Silicon-31	D, all compounds except those given for W and Y	9E+3	3E+4	1E-5	4E-8	1E-4	1E-3
		W, oxides, hydroxides, carbides, and nitrates	-	3E+4	1E-5	5E-8	-	-

120.296: continued

			Table I Occupational Values			Table II Effluent Concentrations		Table III Releases to Sewers
			Col. 1	Col. 2	Col. 3	Col. 1	Col. 2	
			oral Ingestion	Inhalation				Monthly Average
Atomic No.	Radionuclide	Class	ALI (µCi)	ALI (µCi)	DAC (µCi/ml)	Air (µCi/ml)	Water (µCi/ml)	Concen-tration (µCi/ml)
		Y, aluminosilicate glass	-	3E+4	1 E-5	4 E-8	-	-
14	Silicon-32	D, see ^{31}Si	2E+3	2E+2	1 E-7	3E-10	-	-
			LLI wall (3E+3)	-	-	-	4 E-5	4 E-4
		W, see ^{31}Si	-	1E+2	5 E-8	2E-10	-	-
		Y, see ^{31}Si	-	5E+0	2E-9	7E-12	-	-
15	Phosphorus-32	D, all compounds except phosphates given for W	6E+2	9E+2	4 E-7	1E-9	9 E-6	9 E-5
		W, phosphates of Zn^{2+}, S^{3+}, Mg^{2+}, Fe^{3+}, Bi^{3+}, and lanthanides	-	4E+2	2 E-7	5E-10	-	-
15	Phosphorus-33	D, see ^{32}P	6E+3	8E+3	1 E-8	1 E-8	8 E-5	8 E-4
		W, see ^{32}P	-	3E+3	1 E-68	4 E-9	-	-
16	Sulfur-35	Vapor		1E+4	6 E-6	2 E-8	-	-
		D, sulfides and sulfates except those given for W	1E+4	2E+4	7 E-6	2 E-8	-	-
			LLI wall (8E+3)	-	-	-	1 E-4	1 E-3
		W, elemental sulfur,	6E+3					
		sulfides of Sr, Ba, Ge, Sn, Pb, As, Sb, Bi, Cu, Ag, Au, Zn, Cd, Hg, W, and Mo. Sulfates of Ca, Sr, Ba, Ra, As, Sb, and Bi	-	2E+3	9 E-7	3 E-9	-	-
17	Chlorine-36	D, chlorides of H, Li, Na, K, Rb, Cs, and Fr	2E+3	2E+3	1 E-6	3 E-9	2 E-+	2 E-4
		W, chlorides of lantha- nides, Be, Mg, Ca, Sr, Ba, Ra, Al, Ga, In, Tl, Ge, Sn, Pb, As, Sb, Bi, Fe, Ru, Os, Co, Rh, Ir, Ni, Pd, Pt, Cu, Ag, Au, Zn, Cd, Hg, Sc, Y, Ti, Zr, Hf, V, Nb, Ta, Cr, Mo, W, Mn, Tc, and Re	-	2E+2	1 E-7	3 E-10	-	--
17	Chlorine-38[2]	D, see ^{36}Cl	2E+4	4E+4	2 E-5	6 E-8	-	
			St wall (3E+4)	-	-	-		
		W, see ^{36}Cl	-	5E+4	2 E-5	6 E-8	-	-
17	Chlorine-39[2]	D, see ^{36}Cl	2E+4	5E+4	2 E-5	7 E-8	-	-
			St wall (4E+4)	-	-	-	5 E-4	5 E-3

120.296: continued

			Table I Occupational Values			Table II Effluent Concentrations		Table III Releases to Sewers
			Col. 1	Col. 2	Col. 3	Col. 1	Col. 2	
			oral Ingestion	Inhalation				Monthly Average
Atomic No.	Radionuclide	Class	ALI (µCi)	ALI (µCi)	DAC (µCi/ml)	Air (µCi/ml)	Water (µCi/ml)	Concen-tration (µCi/ml)
		W, see ^{36}Cl	-	6E+4	2E-5	8E-8	-	-
18	Argon-37	Submersion[1]	-	-	1E+0	6E-3	-	-
18	Argon-39	Submersion[1]	-	-	2E-4	8E-7	-	-
18	Argon-41	Submersion[1]	-	-	3E-6	1E-8	-	-
19	Potassium-40	D, all compounds	3E+2	4E+2	2E-7	6E-10	4E-6	4E-5
19	Potassium-42	D, all compounds	5E+3	5E+3	2E-6	7E-9	6E-5	6E-4
19	Potassium-43	D, all compounds	6E+3	9E+3	4E-6	1E-8	9E-5	9E-4
19	Potassium-44[2]	D, all compounds	3E+4	7E+4	3E-5	9E+-8	-	-
			St wall (4E+4)	-	-	-	5E-4	5E-3
19	Potassium-45[2]	D, all compounds	3E+4	7E+4	5E-5	2E-7	-	-
			St wall (5E+4)	-	-	-	7E-4	7E-3
20	Calcium-41	W, all compounds	3E+4	1E+5	2E-6	-	-	-
			Bone surf (4E+3)	Bone surf (4E+3)	-	5E-9	6E-5	6-4E
20	Calcium-45	W, all compounds	E+3	4E+3	4E-7	1E-9	2E-5	2E-4
20	Calcium-47	W, all compounds	8E+2	9E+2	4E-7	1E-9	1E-5	1E-4
21	Scandium-43	Y, all compounds	7E+3	2E+4	9E-6	3E-8	1E-4	1E-3
21	Scandium-44m	Y, all compounds	5E+2	7E+2	3E-7	1E-9	7E-6	7E-5
21	Scandium-44	Y, all compounds	4E+3	1E+4	5E-6	2E-8	5E-5	5E-4
21	Scandium-46	Y, all compounds	9E+2	2E+2	1E-7	3E-10	1E-5	1E-4
21	Scandium-47	Y, all compounds	2E+3 3E+3		1E-6	4E-9	-	-
			LLI wall (3E+3)	-	-	-	4E-5	4E-4
21	Scandium-48	Y, all compounds	8E+2	1E+3	6E-7	2E-9	E-5	1E-4
21	Scandium-49[2]	Y, all compounds	2E+4	5E+4	2E-5	8E-8	3E-4	3E-3
22	Titanium-44	D, all compounds except those given for W and Y	3E+2	1E+1	5E-9	2E-11	4E-6	4E-5
		W, oxides, hydroxides, carbides, halides, and nitrates	-	3E+1	1E-8	4E-11	-	-
		Y, SrTi0	-	6E+0	2E-9	8E-12	-	-
22	Titanium-45	D, see ^{44}Ti	9E+3	3E+4	1E-5	3E-8	1E-4	1E-3
		W, see ^{44}Ti	-	4E+4	1E-5	5E-8	-	-
		Y, see ^{44}Ti	-	3E+4	1E-5	4E-8	-	-

120.296: continued

			Table I Occupational Values			Table II Effluent Concentrations		Table III Releases to Sewers
			Col. 1	Col. 2	Col. 3	Col. 1	Col. 2	
			oral Ingestion	Inhalation				Monthly Average
Atomic No.	Radionuclide	Class	ALI (µCi)	ALI (µCi)	DAC (µCi/ml)	Air (µCi/ml)	Water (µCi/ml)	Concen-tration (µCi/ml)
23	Vanadium-47[2]	D, all compounds except those given for W	3E+4	8E+4	3E-5	1E-7	-	-
			St wall (3E+4)	-	-	-		
		W, oxides, hydroxides, carbides, and halides	-	1E+5	4E-5	1E-7	-	-
23	Vanadium-48	D, see ^{47}V	6E+2	1E+3	5E-7	2E-9	9E-6	9E-5
		W, see ^{47}V	-	6E+2	3E-7	9E-10	-	-
23	Vanadium-49	D, see ^{47}V	7E+4	3E+4	1E-5	-	-	-
			LLI wall (9E+4)	Bone surf (3E+4)	-	5E-8	1E-3	1E-2
		W, see ^{47}V	-	3E+4	8E-6	2E-8	-	-
24	Chromium-48	D, all compounds except those given for W and Y	6E+3	1E+4	5E-6	2E-8	8E-5	8E-4
		W, halides and nitrates	-	7E+3	3E-6	1E-8	-	-
		Y, oxides and hydroxides	-	7E+3	3E-6	1E-8	-	-
24	Chromium-49[2]	D, see ^{48}Cr	3E+4	8E+4	4E-5	1E-7	4E-4	4E-3
		W, see ^{48}Cr	-	1E+5	4E-5	1E-7	-	-
		Y, see ^{48}Cr	-	9E+4	4E-5	1E-7	-	-
24	Chromium-51	D, see ^{48}Cr	4E+4	5E+4	2E-5	6E-8	5E-4	5E-3
		W, see ^{48}Cr	-	2E+4	1E-5	3E-8	-	-
		Y, see ^{48}Cr	-	2E+4	8E-6	3E-8	-	-
25	Manganese-51[2]	D, all compounds except those given for W	2E+4	5E+4	2E-5	7E-8	3E-4	3E-3
		W, oxides, hydroxides, halides, and nitrates	-	6E+4	3E-5	8E-8	-	-
25	Manganese-52m[2]	D, see ^{51}Mn	3E+4	9E+4	4E-5	1E-7	-	-
			St wall (4E+4)	-	-	-	5E-4	5E-3
		W, see ^{51}Mn	-	1E+5	4E-5	1E-7	-	-
25	Manganese-52	D, see ^{51}Mn	7E+2	1E+3	5E-7	2E-9	1E-5	1E-4
		W, see ^{51}Mn	-	9E+2	4E-7	1E-9	-	-
25	Manganese-53	D, see ^{51}Mn	5E+4	1E+4	5E-6	-	7E-4	7E-5

120.296: continued

Atomic No.	Radionuclide	Class	Table I Occupational Values Col. 1 oral Ingestion ALI (µCi)	Col. 2 Inhalation ALI (µCi)	Col. 3 Inhalation DAC (µCi/ml)	Table II Effluent Concentrations Col. 1 Air (µCi/ml)	Col. 2 Water (µCi/ml)	Table III Releases to Sewers Monthly Average Concen-tration (µCi/ml)
			-	Bone surf (2E+4)	-	3E-8	-	-
		W, see ^{51}Mn	-	1E+4	5E-6	2E-8	-	-
25	Manganese-54	D, see ^{51}Mn	2E+3	9E+2	4E-7	1E-9	3E-5	3E-4
		W, see ^{51}Mn	-	8E+2	3E-7	1E-9	-	-
25	Manganese-56	D, see ^{51}Mn	5E+3	2E+4	6E-6	2E-8	7E-5	7E-4
		W, see ^{51}Mn	-	2E+4	9E-6	3E-8	-	-
26	Iron-52	D, all compounds except those given for W	9E+2	3E+3	1E-6	4E-9	1E-5	1E-4
		W, oxides, hydroxides, and halides	-	1E+2	1E-6	3E-9	-	-
26	Iron-55	D, see ^{52}Fe	9E+3	2E+3	8E-7	3E-9	1E-4	1E-3
		W, see ^{52}Fe	-	4E+3	2E-6	6E-9	-	-
26	Iron-59	D, see ^{52}Fe	8E+2	3E+2	1E-7	5E-10	1E-5	1E-4
		W, see ^{52}Fe	-	4E+1		2E-7	7E-10-	-
26	Iron-60	D, see ^{52}Fe	3E+1	6E+0	3E-9	9E-12	4E-7	4E-6
		W, see ^{52}Fe	-	2E+1	8E-9	3E-11	-	-
27	Cobalt-55	W, all compounds except those given for Y	1E+3	3E+3	1E-6	4E-9	2E-5	2E-4
		Y, oxides, hydroxides, halides, and nitrates	-	3E+3	1E-6	4E-9	-	-
27	Cobalt-56	W, see ^{55}Co	5E+2	3E+2	1E-7	4E-10	6E-6	6E-5
		Y, see ^{55}Co	4E+2	2E+2	8E-8	3E-10	-	-
27	Cobalt-57	W, see ^{55}Co	8E+3	3E+3	1E-6	4E-9	6E-5	6E-4
		Y, see ^{55}Co	4E+3	7E+2	3E-7	9E-10	-	-
27	Cobalt-58m	W, see ^{55}Co	6E+4	9E+4	4E-5	1E-7	8E-4	8E-3
		Y, see ^{55}Co	-	6E+4	3E-5	9E-8	-	-
27	Cobalt-58	W, see ^{55}Co	1E+3	1E+3	5E-7	2E-9	2E-5	2E-4
		Y, see ^{55}Co	1E+3	7E+2	3E-7	1E-9	-	-
27	Cobalt-60m[2]	W, see ^{55}Co	1E+6	4E+6	2E-3	6E-6	-	-
			St wall (1E+6)	-	-	-	2E-2	2E-1
		Y, see ^{55}Co	-	3E+6	1E-3	4E-6	-	-
27	Cobalt-60	W, see ^{55}Co	5E+2	2E+2	7E-8	2E-10	3E-6	3E-5

120.296: continued

			Table I Occupational Values			Table II Effluent Concentrations		Table III Releases to Sewers
			Col. 1	Col. 2	Col. 3	Col. 1	Col. 2	
			oral Ingestion	Inhalation				Monthly Average
Atomic No.	Radionuclide	Class	ALI (µCi)	ALI (µCi)	DAC (µCi/ml)	Air (µCi/ml)	Water (µCi/ml)	Concen-tration (µCi/ml)
		Y, see ^{55}Co	2 E+2	3 E+1	1 E-8	5 E-11	-	-
27	Cobalt-61[2]	W, see ^{55}Co	2 E+4	6 E+4	3 E-5	9 E-8	3 E-4	3 E-3
		Y, see ^{55}Co	2 E+4	6 E+4	2 E-5	8 E-8	-	-
27	Cobalt-62m[2]	W, see ^{55}Co	4 E+4	2 E+5	7 E-5	2 E-7	-	-
			St wall (5E+4)	-	-	-	7 E-1	7 E-3
		Y, see ^{55}Co	-	2 E+5	6 E-5	2 E-7	-	-
28	Nickel-56	D, all compounds except those given for W	1 E+3	2 E+3	8 E-7	3 E-9	2 E-5	2 E-4
		W, oxides, hydroxides, and carbides	-	1 E+3	5 E-7	2 E-9	-	-
		Vapor	-	1 E+3	5 E-7	2 E-9	-	-
28	Nickel-57	D, see ^{56}Ni	2 E+3	5 E+3	2 E-6	7 E-9	2 E-5	2 E-4
		W, see ^{56}Ni	-	3 E+3	1 E-6	4 E-9	-	-
		Vapor	-	6 E+3	3 E-6	9 E-9	-	-
28	Nickel-59	D, see ^{56}Ni	2 E+4	4 E+3	2 E-6	5 E-9	3 E-4	3 E-3
		W, see ^{56}Ni	-	7 E+3	3 E-6	1 E-8	-	-
		Vapor	-	2 E+3	8 E-7	3 E-9	-	-
28	Nickel-63	D, see ^{56}Ni	9 E+3	2 E+3	7 E-7	2 E-9	1 E-4	1 E-3
		W, see ^{56}Ni	-	3 E+3	1 E-6	4 E-9	-	-
		Vapor	-	8 E+2	3 E-7	1 E-9	-	-
28	Nickel-65	D, see ^{56}Ni	8 E+3	2 E+4	1 E-5	3 E-8	1 E-4	1 E-3
		W, see ^{56}Ni	-	3 E+4	1 E-5	4 E-8	-	-
		Vapor	-	2 E+4	7 E-6	2 E-8	-	-
28	Nickel-66	D, see ^{56}Ni	4 E+2	2 E+3	7 E-7	2 E-9	-	-
			LLI wall (5E+2)	-	-	-	6 E-6	6 E-5
		W, see ^{56}Ni	-	6 E+2	3 E-7	9 E-10	-	-
		Vapor	-	3 E+3	1 E-6	4 E-9	-	-
29	Copper-60[2]	D, all compounds except those given for W and Y	3 E+4	9 E+4	465	1 E-7	-	-
			St wall (3E+4)	-	-	-	4 E-4	4 E-5
		W, sulfides, halides, and nitrates	-	1 E+5	5 E-5	2 E-7	-	-
		Y, oxides and hydroxides	-	1 E+5	4 E-6	1 E-7	-	-
29	Copper-61	D, see ^{60}Cu	1E+4	3E+4	1E-5	4E-8	2E-4	2E-3

120.296: continued

			Table I Occupational Values			Table II Effluent Concentrations		Table III Releases to Sewers
			Col. 1	Col. 2	Col. 3	Col. 1	Col. 2	
			oral Ingestion	Inhalation				Monthly Average
Atomic No.	Radionuclide	Class	ALI (µCi)	ALI (µCi)	DAC (µCi/ml)	Air (µCi/ml)	Water (µCi/ml)	Concen-tration (µCi/ml)
		W, see ^{60}Cu	-	4E+4	2E-5	6E-8	-	-
		Y, see ^{60}Cu	-	4E+4	1E-5	5E-8	-	-
29	Copper-64	D, see ^{60}Cu	1E+4	3E+4	1E-5	4E-8	2E-4	2E-3
		W, see ^{60}Cu	-	2E+4	1E-5	3E-8	-	-
		Y, see ^{60}Cu	-	2E+4	9E-6	3E-8	-	-
29	Copper-67	D, see ^{60}Cu	5E+3	8E+3	3E-6	1E-8	6E-5	6E-4
		W, see ^{60}Cu	-	5E+3	2E-6	7E-9	-	-
		Y, see ^{60}Cu	-	5E+3	2E-6	6E-9	-	-
30	Zinc-62	Y, all compounds	1E+3	3E+3	1E-6	4E-9	2E-5	2E-4
30	Zinc-63[2]	Y, all compounds	2E+4	7E+4	3E-5	9E-8	-	-
			St wall (3E+4)	-	-	-	3E-4	3E-3
30	Zinc-65	Y, all compounds	4E+2	3E+2	1E-7	4E-10	5E-6	5E-5
30	Zinc-69m	Y, all compounds	4E+3	7E+3	3E-6	1E-8	6E-5	6E-4
30	Zinc-69[2]	Y, all compounds	6E+4	1E+5	6E-5	2E-7	8E-4	8E-3
30	Zinc-71m	Y, all compounds	6E+3	2E+4	7E-6	2E-8	8E-5	8E-4
30	Zinc-72	Y, all compounds	1E+3	1E+3	5E-7	2E-9	1E-5	1E-4
31	Gallium-65[2]	D, all compounds except those given for W	5E+4	2E+5	7E-5	2E-7	-	-
			St wall (6E+4)	-	-	-	9E-4	9E-3
		W, oxides, hydroxides, carbides, halides, and nitrates	-	2E+5	8E-5	3E-7	-	-
31	Gallium-66	D, see ^{65}Ga	1E+3	4E+3	1E-6	5E-9	1E-5	1E-4
		W, see ^{65}Ga	-	3E+3	1E-6	4E-9	-	-
31	Gallium-67	D, see ^{65}Ga	7E+3	1E+4	6E-6	2E-8	1E-4	1E-3
		W, see ^{65}Ga	-	1E+4	4E-6	1E-8	-	-
31	Gallium-68[2]	D, see ^{65}Ga	2E+4	4E+4	2E-5	6E-8	2E-4	2E-3
		W, see ^{65}Ga	-	5E+4	2E-5	7E-8	-	-
31	Gallium-70[2]	D, see ^{65}Ga	5E+4	2E+5	7E-5	2E-7	-	-
			St wall (7E+4)	-	-	-	1E-3	1E-2
		W, see ^{65}Ga	-	2E+5	8E+5	3E-7	-	-
31	Gallium-72	D, see ^{65}Ga	1E+3	4E+2	1E-6	5E-9	2E-5	2E-4
		W, see ^{65}Ga	-	3E+3	1E-6	4E-9	-	-

120.296: continued

			Table I Occupational Values			Table II Effluent Concentrations		Table III Releases to Sewers
			Col. 1	Col. 2	Col. 3	Col. 1	Col. 2	
			oral Ingestion	Inhalation				Monthly Average
Atomic No.	Radionuclide	Class	ALI (µCi)	ALI (µCi)	DAC (µCi/ml)	Air (µCi/ml)	Water (µCi/ml)	Concen-tration (µCi/ml)
31	Gallium-73	D, see ^{65}Ga	5E+3	2E+4	6E-6	2E-8	7E-5	7E-4
		W, see ^{65}Ga	-	2E+4	6E-6	2E-8	-	-
32	Germanium-66	D, all compounds except those given for W	2E+4	3E+4	1E-5	4E-8	3E-4	3E-3
		W, oxides, sulfides, and halides	-	2E+4	8E-6	3E-8	-	-
32	Germanium-67[2]	D, see ^{66}Ge	3E+4	9E+4	4E-5	1E-7	-	-
			St wall (4E+4)	-	-	-	6E-4	6E-3
		W, see ^{66}Ge	-	1E+5	4E-5	1E-7	-	-
32	Germanium-68	D, see ^{66}Ge	5E+3	4E+3	2E-6	5E-9	6E-5	6E-4
		W, see ^{66}Ge	-	1E+2	4E-8	1E-10	-	-
32	Germanium-69	D, see ^{66}Ge	1E+4	2E+4	6E-6	2E-8	2E-4	2E-3
		W, see ^{66}Ge	-	8E+3	3E-6	1E-8	-	-
32	Germanium-71	D, see ^{66}Ge	5E+5	4E+5	2E-4	6E-7	7E-3	7E-2
		W, see ^{66}Ge	-	4E+4	2E-5	6E-8	-	-
32	Germanium-75[2]	D, see ^{66}Ge	4E+4	8E+4	3E-5	1E-7	-	-
			St wall (7E+4)	-	-	-	9E-4	9E-3
		W, see ^{66}Ge	-	8E+4	4E-5	1E-7	-	-
32	Germanium-77	D, see ^{66}Ge	8E+3	1E+4	4E-6	1E-8	1E-4	1E-3
		W, see ^{66}Ge	-	6E+3	2E-6	8E-9	-	-
32	Germanium-78[2]	D, see ^{66}Ge	2E+4	2E+4	9E-6	3E-8	-	-
			St wall (2E+4)	-	-	-	3E-4	3E-3
		W, see ^{66}Ge	-	2E+4	9E-6	3E-8	-	-
33	Arsenic-69[2]	W, all compounds	3E+4	1E+5	5E-5	2E-7	-	-
			St wall (4E+4)	-	-	-	6E-4	6E-3
33	Arsenic-70[2]	W, all compounds	1E+4	5E+4	2E-5	7E-8	2E-4	2E-3
33	Arsenic-71	W, all compounds	4E+3	5E+3	2E-6	6E-9	5E-5	5E-4
33	Arsenic-72	W, all compounds	9E+2	1E+3	6E-7	2E-9	1E-5	1E-4
33	Arsenic-73	W, all compounds	8E+3	2E+3	7E-7	2E-9	1E-4	1E-3
33	Arsenic-74	W, all compounds	1E+3	8E+2	3E-7	1E-9	2E-5	2E-4
33	Arsenic-76	W, all compounds	1E+3	1E+3	6E-7	2E-9	1E-5	1E-4
33	Arsenic-77	W, all compounds	4E+3	5E+5	2E-6	7E-9	-	-

120.296: continued

Atomic No.	Radionuclide	Class	Table I Occupational Values Col. 1 oral Ingestion ALI (µCi)	Table I Occupational Values Col. 2 Inhalation ALI (µCi)	Table I Occupational Values Col. 3 Inhalation DAC (µCi/ml)	Table II Effluent Concentrations Col. 1 Air (µCi/ml)	Table II Effluent Concentrations Col. 2 Water (µCi/ml)	Table III Releases to Sewers Monthly Average Concen-tration (µCi/ml)
			LLI wall (5E+3)	-	-	-	6E-5	6E-4
33	Arsenic-78[2]	W, all compounds	8E+6	2E+4	9E-6	3E-8	1E-4	1E-3
34	Selenium-70[2]	D, all compounds except those given for W	2E+4	4E+8	2E-5	5E-8	1E-4	1E-3
		W, oxides, hydroxides, carbides, and elemental Se	1E+4	4E+4	2E-5	6E-8	-	-
34	Selenium-73m[2]	D, see ^{70}Se	6E+4	2E+5	6E-5	2E-7	4E-4	4E-3
		W, see ^{70}Se	3E+4	1E+5	6E-5	2E-7	-	-
34	Selenium-73	D, see ^{70}Se	3E+3	1E+4	5E-6	2E-8	4E-5	4E-4
		W, see ^{70}Se	-	2E+4	7E-6	2E-8	-	-
34	Selenium-75	D, see ^{70}Se	5E+2	7E+2	3E-7	1E-9	7E-6	7E-5
		W, see ^{70}Se	-	6E+2	3E-7	8E-10	-	-
34	Selenium-79	D, see ^{70}Se	6E+2	8E+2	3E-7	1E-9	8E-6	8E-5
		W, see ^{70}Se	-	6E+2	2E-7	8E-10	-	-
34	Selenium-81m[2]	D, see ^{70}Se	4E+4	7E+4	3E-5	9E-8	3E-4	3E-3
		W, see ^{70}Se	2E+4	7E+4	3E-5	1E-7	-	-
34	Selenium-81[2]	D, see ^{70}Se	6E+4	2E+5	9E-5	3E-7	-	-
			St wall (8E+4)	-	-	-	1E-3	1E-2
		W, see ^{70}Se	-	2E+5	1E-4	3E-7	-	-
34	Selenium-83[2]	D, see ^{70}Se	4E+4	1E+5	5E-5	2E-7	4E-4	4E-3
		W, see ^{70}Se	3E+4	1E+5	5E-5	2E-7	-	-
35	Bromine-74m[2]	D, bromides of H, Li, Na, K, Rb, Cs, and Fr	1E+4	5E+5	2E-5	5E-8	-	-
			St wall (2E+4)	-	-	-	3E-4	3E-3
		W, bromides of lantha- nides, Be, Mg, Ca, Sr, Ba, Ra, Al, Ga, In, Tl, Ge, Sn, Pb, As, Sb, Bi, Fe, Ru, Os, Co, Rh, Ir, Ni, Pd, Pt, Cu, Ag, Au, Zn, Cd, Hg, Sc, Y, Ti, Zr, Hf, V, Nb, Ta, Mn, Tc, and Re	-	4E+4	2E-5	6E-8	-	-

120.296: continued

			Table I Occupational Values			Table II Effluent Concentrations		Table III Releases to Sewers
			Col. 1	Col. 2	Col. 3	Col. 1	Col. 2	
			oral Ingestion	Inhalation				Monthly Average
Atomic No.	Radionuclide	Class	ALI (µCi)	ALI (µCi)	DAC (µCi/ml)	Air (µCi/ml)	Water (µCi/ml)	Concen-tration (µCi/ml)
35	Bromine-74[2]	D, see ^{74m}Br	2E+4	7E+4	3E-5	1E-7	-	-
			St wall (4E+4)	-	-	-	5E-4	53E-3
		W, see ^{74m}Br	-	8E+4	4E-5	1E-7	-	-
35	Bromine-75[2]	D, see ^{74m}Br	3E+4	5E+4	2E-5	7E-8	-	-
			St wall (4E+4)	-	-	-	5E-4	5E-3
		W, see ^{74m}Br	-	5E+4	2E-5	7E-8	-	-
35	Bromine-76	D, see ^{74m}Br	4E+3	5E+3	2E-6	7E-8	5E-5	5E-4
		W, see ^{74m}Br	-	4E+3	2E-6	6E-9	-	-
35	Bromine-77	D, see ^{74m}Br	2E+4	2E+4	1E-5	3E-8	2E-4	2E-3
		W, see ^{74m}Br	-	2E+4	8E-6	3E-8	-	-
35	Bromine-80m	D, see ^{74m}Br	2E+4	2E+4	7E-6	2E-5	3E-4	3E-3
		W, see ^{74m}Br	-	1E+4	6E-6	2E-8	-	-
35	Bromine-80[2]	D, see ^{74m}Br	5E+4	2E+5	8E-5	3E-7	-	-
			St wall (9E+4)	-	-	-	1E-3	1E-2
		W, see ^{74m}Br	-	2E+5	9E-5	3E-7	-	-
35	Bromine-82	D, see ^{74m}Br	3E+3	4E+3	2E-5	5E-9	4E-5	4E-4
		W, see ^{74m}Br	-	4E+3	2E-6	5E-9	-	-
35	Bromine-83	D, see ^{74m}Br	5E+4	6E+4	3E-5	9E-8	-	-
			St wall (7E+4)	-	-	-	9E-4	9E-3
		W, see ^{74m}Br	-	6E+4	3E-5	9E-8	-	-
35	Bromine-84[2]	D, see ^{74m}Br	2E+4	6E+4	2E-5	8E-8	-	-
			St wall (3E+4)	-	-	-	4E-4	4E-3
		W, see ^{74m}Br	-	6E+4	3E-5	9E-8	-	-
36	Krypton-74[2]	Submersion[1]	-	-	3E-6	1E-8	-	-
36	Krypton-76	Submersion[1]	-	-	9E-6	4E-8	-	-
36	Krypton-77[2]	Submersion[1]	-	-	4E-6	2E-8	-	-
36	Krypton-79	Submersion[1]	-	-	2E-5	7E-8	-	-
36	Krypton-81	Submersion[1]	-	-	7E-4	3E-6	-	-
36	Krypton-83m[2]	Submersion[1]	-	-	1E-2	5E-5	-	-
36	Krypton-85m	Submersion[1]	-	-	2E-5	1E-7	-	-

120.296: continued

			Table I Occupational Values			Table II Effluent Concentrations		Table III Releases to Sewers
			Col. 1	Col. 2	Col. 3	Col. 1	Col. 2	
			oral Ingestion	Inhalation				Monthly Average
Atomic No.	Radionuclide	Class	ALI (µCi)	ALI (µCi)	DAC (µCi/ml)	Air (µCi/ml)	Water (µCi/ml)	Concen-tration (µCi/ml)
36	Krypton-85	Submersion[1]	-	-	1E-4	7E-7	-	-
36	Krypton-87[2]	Submersion[1]	-	-	5E-6	2E-8	-	-
36	Krypton-88	Submersion[1]	-	-	2E-6	9E-9	-	-
37	Rubidium-79[2]	D, all compounds	4E+4	1E+5	5E-5	2E-7	-	-
			St wall (6E+4)	-	-	-	8E-4	8E-3
37	Rubidium-81m[2]	D, all compounds	2E+5	3E+5	1E-4	5E-7	-	-
			St wall (3E+5)	-	-	-	4E-3	4E-2
37	Rubidium-81	D, all compounds	4E+4	5E+4	2E-5	7E-8	5E-4	5E-3
37	Rubidium-82m	D, all compounds	1E+4	2E+4	7E-6	2E-8	2E-4	2E-3
37	Rubidium-83	D, all compounds	6E+2	1E+3	4E-8	1E-9	9E-6	9E-5
37	Rubidium-84	D, all compounds	5E+2	8E+2	3E-7	1E-9	7E-6	7E-5
37	Rubidium-86	D, all compounds	5E+2	8E+2	3E-7	1E-9	7E-6	7E-5
37	Rubidium-87	D, all compounds	1E+3	2E+3	6E-7	2E-9	1E-5	1E-4
37	Rubidium-88[2]	D, all compounds	2E+4	6E+4	3E-5	9E-8	-	-
			St wall (3E+4)	-	-	-	4E-4	4E-3
37	Rubidium-89[2]	D, all compounds	4E+4	1E+5	6E-5	2E-7	-	-
			St wall (6E+4)	-	-	-	9E-4	9E-3
38	Strontium-80[2]	D, all soluble compounds except $SrTiO_3$	4E+3	1E+4	5E-6	2E-8	6E-5	6E-4
		Y, all insoluble compounds and $SrTi0_3$	-	1E+4	5E-6	2E-8	-	-
38	Strontium-81[2]	D, see ^{80}Sr	3E+4	8E+4	3E-5	1E-7	3E-4	3E-3
		Y, see ^{80}Sr	2E+4	8E+4	3E-5	1E-7	-	-
38	Strontium-82	D, see ^{80}Sr	3E+2	4E+2	2E-7	6E-10	-	-
			LLI wall (2E+2)	-	-	-	3E-6	3E-5
		Y, see ^{80}Sr	2E+2	9E+1	4E-8	1E-10	-	-
38	Strontium-83	D, see ^{80}Sr	3E+3	7E+3	3E-6	1E-8	3E-5	3E-4
		Y, see ^{80}Sr	2E+3	4E+3	1E-6	5E-9	-	-
38	Strontium-85m[2]	D, see ^{80}Sr	2E+5	6E+5	3E-4	9E-7	3E-3	3E-2

120.296: continued

			Table I Occupational Values			Table II Effluent Concentrations		Table III Releases to Sewers
			Col. 1	Col. 2	Col. 3	Col. 1	Col. 2	
			oral Ingestion	Inhalation				Monthly Average
Atomic No.	Radionuclide	Class	ALI (µCi)	ALI (µCi)	DAC (µCi/ml)	Air (µCi/ml)	Water (µCi/ml)	Concen-tration (µCi/ml)
		Y, see ^{80}Sr	-	8E+5	4E-4	1E-6	-	-
38	Strontium-85	D, see ^{80}Sr	3E+3	3E+3	1E-6	4E-9	4E-5	4E-4
		Y, see ^{80}Sr	-	2E+3	6E-7	2E-9	-	-
38	Strontium-87m	D, see ^{80}Sr	5E+4	1E+5	5E-5	2E-7	6E-4	6E-3
		Y, see ^{80}Sr	4E+4	2E+5	6E-5	3E-7	-	-
38	Strontium-89	D, see ^{80}Sr	6E+2	8E+2	4E-7	1E-9	-	-
			LLI wall (6E+2)	-	-	-	8E-6	8E-5
		Y, see ^{80}Sr	5E+2	1E+2	6E-8	2E-10	-	-
38	Strontium-90	D, see ^{80}Sr	3E+1	2E+1	8E-9	-	-	-
			Bone surf (4E+1)	Bone surf (2E+1)	-	3E-11	5E-7	5E-6
		Y, see ^{80}Sr	-	4E+0	2E-9	6E-12	-	-
38	Strontium-91	D, see ^{80}Sr	2E+3	6E+3	2E-6	8E-9	2E-5	2E-4
		Y, see ^{80}Sr	-	4E+3	1E-6	5E-9	-	-
38	Strontium-92	D, see ^{80}Sr	3E+3	9E+3	4E-6	1E-8	4E-5	4E-4
		Y, see ^{80}Sr	-	7E+3	3E-6	9E-9	-	-
39	Yttrium-86m[2]	W, all compounds except those given for Y	2E+4	6E+4	2E-5	E- 88	3E-4	3E-3
		Y, oxides and hydroxides	-	5E+4	2E-5	8E-8	-	-
39	Yttrium-86	W, see ^{86m}Y	1E+3	3E+3	1E-6	5E-9	2E-5	2E-4
		Y, see ^{86m}Y	-	3E+3	1E-6	5E-9	-	-
39	Yttrium-87	W, see ^{86m}Y	2E+3	3E+3	1E-6	5E-9	3E-5	3E-4
		Y, see ^{86m}Y	-	3E+3	1E-6	5E-9	-	-
39	Yttrium-88	W, see ^{86m}Y	1E+3	3E+2	1E-7	3E-10	1E-5	1E-4
		Y, see ^{86m}Y	-	2E+2	1E-7	3E-10	-	-
39	Yttrium-90m	W, see ^{86m}Y	8E+3	1E+4	5E-6	2E-8	1E-4	1E-3
		Y, see ^{86m}Y	-	1E+4	5E-6	2E-8	-	-
39	Yttrium-90	W, see ^{86m}Y	4E+2	7E+2	3E-7	9E-10	-	-
			LLI wall (5E+2)	-	-	-	7E-6	7E-5
		Y, see ^{86m}Y	-	6E+2	3E-7	9E-10	-	-
39	Yttrium-91m[2]	W, see ^{86m}Y	1E+5	2E+5	1E-4	3E-7	2E-3	2E-2

120.296: continued

			Table I Occupational Values			Table II Effluent Concentrations		Table III Releases to Sewers
			Col. 1	Col. 2	Col. 3	Col. 1	Col. 2	
			oral Ingestion	Inhalation				Monthly Average
Atomic No.	Radionuclide	Class	ALI (µCi)	ALI (µCi)	DAC (µCi/ml)	Air (µCi/ml)	Water (µCi/ml)	Concen-tration (µCi/ml)
		Y, see ^{86m}Y	-	2E+5	7E-5	2E-7	-	-
39	Yttrium-91	W, see ^{86m}Y	5E+2	2E+2	7E-8	2E-10	-	-
			LLI wall (6E+2)	-	-	-	8E-6	8E-5
		Y, see ^{86m}Y	-	1E+2	5E-8	2E-10	-	-
39	Yttrium-92	W, see ^{86m}Y	3E+3	9E+3	4E-6	1E-8	4E-5	4E-4
		Y, see ^{86m}Y	-	8E+3	3E-6	1E-8	-	-
39	Yttrium-93	W, see ^{86m}Y	1E+3	3E+3	1E-6	4E-9	2E-5	2E-4
		Y, see ^{86m}Y	-	2E+3	1E-6	3E-9	-	-
39	Yttrium-94[2]	W, see ^{86m}Y	2E+4	8E+4	3E-5	1E-7	-	-
			St wall (3E+4)	-	-	-	4E-4	4E-3
		Y, see ^{86m}Y	-	8E+4	3E-5	1E-7	-	-
39	Yttrium-95[2]	W, see ^{86m}Y	4E+4	2E+5	6E-5	2E-7	-	-
			St wall (5E+4)	-	-	-	7E-4	7E-3
		Y, see ^{86m}Y	-	1E+5	6E-5	2E-7	-	-
40	Zirconium-86	D, all compounds except those given for W and Y	1E+3	4E+3	2E-5	6E-9	2E-5	2E-4
		W, oxides, hydroxides, halides, and nitrates	-	3E+3	1E-6	4E-9	-	-
		Y, carbide	-	2E+3	1E-6	3E-9	-	-
40	Zirconium-88	D, see ^{86}Zr	4E+3	2E+2	9 E-8	3E-10	5E-5	5E-4
		W, see ^{86}Zr	-	5E+2	2E-7	7E-10	-	-
		Y, see ^{86}Zr	-	3E+2	1E-7	4E-10	-	-
40	Zirconium-89	D, see ^{86}Zr	2E+3	4E+3	1E-6	5E-9	2E-5	2E-4
		W, see ^{86}Zr	-	2E+3	1E-6	3E-9	-	-
		Y, see ^{86}Zr	-	2E+3	1E-6	3E-9	-	-
40	Zirconium-93	D, see ^{86}Zr	1E+3	6E+0	3E-9	-	-	-
			Bone surf (3E+3)	Bone surf (2E+1)	-	2E-11	4E-5	4E-4
		W, see ^{86}Zr	-	2E+1	E- 18	-	-	-
			-	Bone surf (6E+1)	-	9E-11	-	-
		Y, see ^{86}Zr	-	6E+1	2E-8	-	-	-
			-	Bone surf (7E+1)	-	9E-11	-	-

120.296: continued

			Table I Occupational Values			Table II Effluent Concentrations		Table III Releases to Sewers
			Col. 1	Col. 2	Col. 3	Col. 1	Col. 2	
			oral Ingestion	Inhalation				Monthly Average
Atomic No.	Radionuclide	Class	ALI (µCi)	ALI (µCi)	DAC (µCi/ml)	Air (µCi/ml)	Water (µCi/ml)	Concen-tration (µCi/ml)
40	Zirconium-95	D, see ^{86}Zr	1E+3	1E+2	5E-8	2E-5	2E-4	
			-	Bone surf (3E+2)	-	4E-10	-	-
		W, see ^{86}Zr	-	4E+2	2E-7	5E-10	-	-
		Y, see ^{86}Zr	-	3E+2	1E-7	4E-10	-	-
40	Zirconium-97	D, see ^{86}Zr	6E+2	2E+3	8E-7	3E-9	9E-6	9E-5
		W, see ^{86}Zr	-	1E+3	6E-7	2E-9	-	-
		Y, see ^{86}Zr	-	1E+3	5E-8	2E-9	-	-
41	Niobium-88[2]	W, all compounds except those given for Y	5E+4	2E+5	9E-5	3E-7	-	-
			St wall (7E+4)	-	-	-	1E-3	1E-2
		Y, oxides and hydroxides	-	2E+5	9E-5	3E-7	-	-
41	Niobium-89[2] (66 min)	W, see ^{88}Nb	1E+4	4E+4	2E-5	6E-8	1E-4	1E-3
		Y, see ^{88}Nb	-	4E+4	2E-5	5E-8	-	-
41	Niobium-89 (122 min)	W, see ^{88}Nb	5E+3	2E+4	8E-6	3E-8	7E-4	7E-4
		Y, see ^{88}Nb	-	2E+4	6E-6	2E-8	-	-
41	Niobium-90	W, see ^{88}Nb	1E+3	3E+3	1E-6	4E-9	1E-5	1E-4
		Y, see ^{88}Nb	-	2E+3	1E-6	3E-9	-	-
41	Niobium-93m	W, see ^{88}Nb	9E+3	2E+3	8E-7	3E-9	-	-
			LLI wall (1E+4)	-	-	-	2E-4	2E-3
		Y, see ^{88}Nb	-	2E+2	7E-8	2E-10	-	-
41	Niobium-94	W, see ^{88}Nb	9E+2	2E+2	8E-8	3E-10	1E-6	1E-4
		Y, see ^{88}Nb	-	2E+1	6E-9	2E-11	-	-
41	Niobium-95m	W, see ^{88}Nb	2E+3	3E+3	1E-4	4E-9	-	-
			LLI wall (2E+3)	-	-	-	3E-5	3E-4
		Y, see ^{88}Nb	-	2E+3	9E-7	3E-9	-	-
41	Niobium-95	W, see ^{88}Nb	2E+3	1E+3	5E-7	2E-9	3E-5	3E-4
		Y, see ^{88}Nb	-	1E+3	5E-7	2E-9	-	-
41	Niobium-96	W, see ^{88}Nb	1E+3	3E+3	1E-6	4E-9	2E-5	2E-4
		Y, see ^{88}Nb	-	2E+3	1E-6	3E-9	-	-
41	Niobium-97[2]	W, see ^{88}Nb	2E+4	8E+4	3E-5	1E-7	3E-4	3E-3

120.296: continued

			Table I Occupational Values			Table II Effluent Concentrations		Table III Releases to Sewers
			Col. 1	Col. 2	Col. 3	Col. 1	Col. 2	
			oral Ingestion	Inhalation				Monthly Average
Atomic No.	Radionuclide	Class	ALI (µCi)	ALI (µCi)	DAC (µCi/ml)	Air (µCi/ml)	Water (µCi/ml)	Concen-tration (µCi/ml)
		Y, see ^{88}Nb	-	7E+4	3E-5	1E-7	-	-
41	Niobium-98[2]	W, see ^{88}Nb	1E+4	5E+4	2E-5	8E-8	2E-4	2E-3
		Y, see ^{88}Nb	-	5E+4	2E-5	7E-8	-	-
42	Molybdenum-90	D, all compounds except those given for Y	4E+3	7E+3	3E-6	1E-8	3E-5	3E-4
		Y, oxides, hydroxides, and MoS_2	2E+3	5E+2	2E-6	6E-9	-	-
42	Molybdenum-93m	D, see ^{90}Mo	9E+3	2E+4	7E-6	2E-8	6E-5	6E-4
		Y, see ^{90}Mo	4E+3	1E+4	6E-6	2E-8	-	-
42	Molybdenum-93	D, see ^{90}Mo	4E+3	5E+3	2E-6	8E-9	5E-5	5E-4
		Y, see ^{90}Mo	2E+4	2E+2	8E-8	2E-10	-	-
42	Molybdenum-99	D, see ^{90}Mo	2E+3	3E+3	1E-6	4E-9	-	-
			LLI wall (1E+3)	-	-	-	2E-5	2E-4
		Y, see ^{90}Mo	1E+3	1E+3	6E-7	2E-9	-	-
42	Molybdenum-101[2]	D, see ^{90}Mo	4E+4	1E+5	6E-5	2E-7	-	-
			St wall (5E+4)	-	-	-	7E-4	7E-3
		Y, see ^{90}Mo	-	1E+5	6E-5	2E-7	-	-
43	Technetium-93m[2]	D, all compounds except those given for W	7E+4	2E+5	6E-5	2E-7	1E-3	1E-2
		W, oxides, hydroxides, halides, and nitrates	-	6E+5	1E-4	4E-7	-	-
43	Technetium-93	D, see ^{93m}Tc	3E+4	7E+4	3E-5	1E-7	4E-4	4E-3
		W, see ^{93m}Tc	-	1E+5	4E-5	1E-7	-	-
43	Technetium-94m[2]	D, see ^{93m}Tc	2E+4	4E+4	2E-5	6E-8	3E-4	3E-3
		W, see ^{93m}Tc	-	6E+4	2E-5	8E-8	-	-
43	Technetium-94	D, see ^{93m}Tc	9E+3	2E+4	8E-6	3E-8	1E-4	1E-3
		W, see ^{93m}Tc	-	2E+4	1E-5	3E-8	-	-
43	Technetium-95m	D, see ^{93m}Tc	4E+3	5E+3	2E-6	8E-9	5E-5	5E-4
		W, see ^{93m}Tc	-	2E+3	8E-7	3E-9	-	-
43	Technetium-95	D, see ^{93m}Tc	1E+4	2E+4	9E-6	3E-8	1E-4	1E-3

120.296: continued

			Table I Occupational Values			Table II Effluent Concentrations		Table III Releases to Sewers
			Col. 1	Col. 2	Col. 3	Col. 1	Col. 2	
			oral Ingestion	Inhalation				Monthly Average
Atomic No.	Radionuclide	Class	ALI (µCi)	ALI (µCi)	DAC (µCi/ml)	Air (µCi/ml)	Water (µCi/ml)	Concen-tration (µCi/ml)
		W, see ^{93m}Tc	-	2E+4	8E-6	3E-8	-	-
43	Technetium-96m[2]	D, see ^{93m}Tc	2E+5	3E+5	1E-4	4E-7	2E-3	2E-2
		W, see ^{93m}Tc	-	2E+5	1E-4	3E-7	-	-
43	Technetium-96	D, see ^{93m}Tc	2E+3	3E+3	1E-6	5E-9	3E-5	3E-4
		W, see ^{93m}Tc	-	2E+3	9E-7	3E-9	-	-
43	Technetium-97m	D, see ^{93m}Tc	5E+3	7E+1	3E-6	-	6E-5	6E-4
			-	St wall (7E+3)	-	1E-8	-	-
		W, see ^{93m}Tc	-	1E+3	5E-7	2E-9	-	-
43	Technetium-97	D, see ^{93m}Tc	4E+4	5E+4	2E-5	7E-8	5E-4	5E-3
		W, see ^{93m}Tc	-	6E+3	2E-6	8E-9	-	-
43	Technetium-98	D, see ^{93m}Tc	1E+3	2E+3	7E-7	2E-9	1E-5	1E-4
		W, see ^{93m}Tc	-	3E+2	1E-7	4E-10	-	-
43	Technetium-99m	D, see ^{93m}Tc	8E+4	2E+5	6E-5	2E-7	1E-3	1E-2
		W, see ^{93m}Tc	-	2E+5	1E-4	3E-7	-	-
43	Technetium-99	D, see ^{93m}Tc	4E+3	5E+3	2E-6	-	6E-5	6E-4
			-	St wall (6E+3)	-	8E-9	-	-
		W, see ^{93m}Tc	-	7E+2	3E-7	9E-10	-	-
43	Technetium-101[2]	D, see ^{93m}Tc	9E+4	3E+5	1E-4	5E-7	-	-
			St wall (1E+5)	-	-	-	2E-3	2E-2
		W, see ^{93m}Tc	-	4E+5	2E-4	5E-7	-	-
43	Technetium-104[2]	D, see ^{93m}Tc	2E+4	7E+4	3E-5	1E-7	-	-
			St wall (3E+4)	-	-	-	4E-4	4E-3
		W, see ^{93m}Tc	-	9E+4	4E-5	1E-7	-	-
44	Ruthenium-94[2]	D, all compounds except those given for W and Y	2E+4	4E+4	2E-5	6E-8	2E-4	2E-3
		W, halides	-	6E+4	3E-5	9E-8	-	-
		Y, oxides and hydroxides	-	6E+4	2E-5	8E-8	-	-
44	Ruthenium-97	D, see ^{94}Ru	8E+3	2E+4	8E-6	3E-8	1E-4	1E-3
		W, see ^{94}Ru	-	1E+4	5E-6	2E-8	-	-
		Y, see ^{94}Ru	-	1E+4	5E-6	2E-8	-	-

120.296: continued

			Table I Occupational Values			Table II Effluent Concentrations		Table III Releases to Sewers
			Col. 1	Col. 2	Col. 3	Col. 1	Col. 2	
			oral Ingestion	Inhalation				Monthly Average
Atomic No.	Radionuclide	Class	ALI (µCi)	ALI (µCi)	DAC (µCi/ml)	Air (µCi/ml)	Water (µCi/ml)	Concen-tration (µCi/ml)
44	Ruthenium-103	D, see ^{94}Ru	2E+3	2E+3	7E-7	2E-9	3E-5	3E-4
		W, see ^{94}Ru	-	1E+3	4E-7	1E-9	-	-
		Y, see ^{94}Ru	-	6E+2	3E-7	9E-10	-	-
44	Ruthenium-105	D, see ^{94}Ru	5E+3	1E+4	6E-6	2E-8	7E-5	7E-4
		W, see ^{94}Ru	-	1E+4	6E-6	2E-8	-	-
		Y, see ^{94}Ru	-	1E+4	5E-6	2E-8	-	-
44	Ruthenium-106	D, see ^{94}Ru	2E+2	9E+1	4E-7	1E-10	-	-
			LLI wall (2E+2)	-	-	-	3E-6	3E-5
		W, see ^{94}Ru	-	5E+1	2E-8	8E-11	-	-
		Y, see ^{94}Ru	-	1E+1	5E-9	2E-11	-	-
45	Rhodium-99m	D, all compounds except those given for W and Y	2E+4	6E+4	2E-5	8E-8	2E-4	2E-3
		W, halides	-	8E+4	3E-5	1E-7	-	-
		Y, oxides and hydroxides	-	7E+4	3E-5	9E-8	-	-
45	Rhodium-99	D, see ^{99m}Rh	2E+3	3E+3	1E-6	4E-9	3E-5	3E-4
		W, see ^{99m}Rh	-	2E+3	9E-7	3E-9	-	-
		Y, see ^{99m}Rh	-	2E+3	8E-7	3E-9	-	-
45	Rhodium-100	D, see ^{99m}Rh	2E+3	5E+3	2E-6	7E-9	2E-5	2E-4
		W, see ^{99m}Rh	-	4E+3	2E-6	6E-9	-	-
		Y, see ^{99m}Rh	-	4E+3	2E-6	5E-9	-	-
45	Rhodium-101m	D, see ^{99m}Rh	6E+3	1E+4	5E-6	2E-8	8E-5	8E-4
		W, see ^{99m}Rh	-	8E+3	4E-6	1E-8	-	-
		Y, see ^{99m}Rh	-	8E+3	3E-6	1E-8	-	-
45	Rhodium-101	D, see ^{99m}Rh	2E+3	5E+2	2E-7	7E-10	E- 35	3E-4
		W, see ^{99m}Rh	-	8E+2	3E-7	1E-9	-	-
		Y, see ^{99m}Rh	-	2E+2	6E-8	2E-10	-	-
45	Rhodium-102m	D, see ^{99m}Rh	1E+5	5E+2	2E-7	7E-10	-	-
			LLI wall (1E+3)	-	-	-	2E-5	2E-4
		W, see ^{99m}Rh	-	4E+2	2E-7	5E-10	-	-
		Y, see ^{99m}Rh	-	1E+2	5E-8	2E-10	-	-
45	Rhodium-102	D, see ^{99m}Rh	6E+2	9E+1	4E-8	1E-10	8E-6	8E-5
		W, see ^{99m}Rh	-	2E+2	7E-8	2E-10	-	-

120.296: continued

			Table I Occupational Values			Table II Effluent Concentrations		Table III Releases to Sewers
			Col. 1	Col. 2	Col. 3	Col. 1	Col. 2	
			oral Ingestion	Inhalation				Monthly Average
Atomic No.	Radionuclide	Class	ALI (µCi)	ALI (µCi)	DAC (µCi/ml)	Air (µCi/ml)	Water (µCi/ml)	Concen-tration (µCi/ml)
		Y, see ^{99m}Rh	-	6E+1	2E-8	8E-11	-	-
45	Rhodium-103m[2]	D, see ^{99m}Rh	4E+5	1E+6	5E-4	2E-6	6E-3	6E-2
		W, see ^{99m}Rh	-	1E+6	5E-4	2E-6	-	-
		Y, see ^{99m}Rh	-	1E+6	5E-4	2E-6	-	-
45	Rhodium-105	D, see ^{99m}Rh	4E+3	1E+4	5E-6	2E-8	-	-
			LLI wall (4E+3)	-	-	-	5E-5	5E-4
		W, see ^{99m}Rh	-	6E+3	3E-6	9E-9	-	-
		Y, see ^{99m}Rh	-	6E+3	2E-6	8E-9	-	-
45	Rhodium-106m	D, see ^{99m}Rh	8E+3	3E+4	1E-5	4E-8	1E-4	1E-3
		W, see ^{99m}Rh	-	4E+4	2E-5	5E-8	-	-
		Y, see ^{99m}Rh	-	4E+4	1E-5	5E-8	-	-
45	Rhodium-107[2]	D, see ^{99m}Rh	7E+4	2E+5	1E-4	3E-4	-	-
			St wall (9E+4)	-	-	-	1E-3	12 E-
		W, see ^{99m}Rh	-	3E+5	1E-4	4E-7	-	-
		Y, see ^{99m}Rh	-	3E+5	1E-4	3E-7	-	-
46	Palladium-100	D, all compounds except those given for W and Y	1E+3	1E+3	6E-8	2E-9	2E-5	2E-4
		W, nitrates	-	1E+3	5E-7	2E-9	-	-
		Y, oxides and hydroxides	-	1E+3	6E-7	2E-9	-	-
46	Palladium-101	D, see ^{100}Pd	1E+4	3E+4	1E-5	5E-8	2E-4	2E-3
		W, see ^{100}Pd	-	3E+4	1E-5	5E-8	-	-
		Y, see ^{100}Pd	-	3E+4	1E-5	4E-8	-	-
46	Palladium-103	D, see ^{100}Pd	6E+3	6E+3	3E-6	9E-9	-	-
			LLI wall (7E+3)	-	-	-	1E-4	1E-3
		W, see ^{100}Pd	-	4E+3	2E-6	6E-9	-	-
		Y, see ^{100}Pd	-	4E+3	1E-6	5E-9	-	-
46	Palladium-107	D, see ^{100}Pd	3E+4	2E+4	9E-6	-	-	-
			LLI wall (4E+4)	Kidneys (2E+4)	-	3E-8	5E-4	5E-3
		W, see ^{100}Pd	-	7E+3	3E-6	1E-8	-	-
		Y, see ^{100}Pd	-	4E+2	2E-7	6E-10	-	-
46	Palladium-109	D, see ^{100}Pd	2E+3	6E+3	3E-6	9E-9	3E-5	3E-4

120.296: continued

Atomic No.	Radionuclide	Class	Table I Occupational Values Col. 1 oral Ingestion ALI (µCi)	Table I Occupational Values Col. 2 Inhalation ALI (µCi)	Table I Occupational Values Col. 3 Inhalation DAC (µCi/ml)	Table II Effluent Concentrations Col. 1 Air (µCi/ml)	Table II Effluent Concentrations Col. 2 Water (µCi/ml)	Table III Releases to Sewers Monthly Average Concen-tration (µCi/ml)
		W, see ^{100}Pd	-	5E+3	2E-6	8E-9	-	-
		Y, see ^{100}Pd	-	5E+3	2E-6	6E-9	-	-
47	Silver-102[2]	D, all compounds except those given for W and Y	5E+4	2E+5	8E-5	2E-7	-	-
			St wall (6E+4)	-	-	-	9E-4	9E-3
		W, nitrates and sulfides	-	2E+5	9E-5	3E-7	-	-
		Y, oxides and hydroxides	-	2E+5	8E-5	3E-7	-	-
47	Silver-103[2]	D, see ^{102}Ag	4E+4	1E+5	4E-5	1E-7	5E-4	5E-3
		W, see ^{102}Ag	-	1E+5	5E-5	2E-7	-	-
		Y, see ^{102}Ag	-	1E+5	5E-5	2E-7	-	-
47	Silver-104m[2]	D, see ^{102}Ag	3E+4	9E+4	4E-5	1E-7	4E-4	4E-3
		W, see ^{102}Ag	-	1E+5	5E-5	2E-7	-	-
		Y, see ^{102}Ag	-	1E+5	5E-5	2E-7	-	-
47	Silver-104[2]	D, see ^{102}Ag	2E+4	7E+4	3E-5	1E-7	3E-5	3E-3
		W, see ^{102}Ag	-	1E+5	6E-5	2E-7	-	-
		Y, see ^{102}Ag	-	1E+5	6E-5	2E-7	-	-
47	Silver-105	D, see ^{102}Ag	3E+3	1E+3	4E-7	1E-9	4E-5	4E-4
		W, see ^{102}Ag	-	2E+3	7E-7	2E-9	-	-
		Y, see ^{102}Ag	-	2E+3	7E-7	2E-9	-	-
47	Silver-106m	D, see ^{102}Ag	8E+2	7E+2	3E-7	1E-9	1E-5	1E-4
		W, see ^{102}Ag	-	9E+2	4E-7	1E-9	-	-
		Y, see ^{102}Ag	-	9E+2	4E-7	1E-9	-	-
47	Silver-106[2]	D, see ^{102}Ag	6E+4	2E+5	8E-5	3E-7	-	-
			St. wall (6E+4)	-	-	-	9E-4	9E-3
		W, see ^{102}Ag	-	2E+5	9E-5	3E-7	-	-
		Y, see ^{102}Ag	-	2E+5	8E-5	3E-7	-	-
47	Silver-108m	D, see ^{102}Ag	6E+2	2E+2	8E-8	3E-10	9E-6	9E-5
		W, see ^{102}Ag	-	3E+2	1E-7	4E-10	-	-
		Y, see ^{102}Ag	-	2E+1	1E-8	3E-11	-	-
47	Silver-110m	D, see ^{102}Ag	5E+2	1E+2	5E-8	2E-10	6E-6	6E-5
		W, see ^{102}Ag	-	2E+2	8E-8	3E-10	-	-
		Y, see ^{102}Ag	-	9E+1	4E-8	1E-10	-	-

120.296: continued

			Table I Occupational Values			Table II Effluent Concentrations		Table III Releases to Sewers
			Col. 1	Col. 2	Col. 3	Col. 1	Col. 2	
			oral Ingestion	Inhalation				Monthly Average
Atomic No.	Radionuclide	Class	ALI (µCi)	ALI (µCi)	DAC (µCi/ml)	Air (µCi/ml)	Water (µCi/ml)	Concen-tration (µCi/ml)
47	Silver-111	D, see ^{102}Ag	E+ 92	2E+3	6E-7	-	-	-
			LLI wall (1E+3)	Liver (2E+3)	-	2E-9	2E-5	2E-4
		W, see ^{102}Ag	-	9E+2	4E-7	1E-9	-	-
		Y, see ^{102}Ag	-	9E+2	4E-7	1E-9	-	-
47	Silver-112	D, see ^{102}Ag	3E+3	8E+3	3E-6	1E-8	4E-5	4E-4
		W, see ^{102}Ag	-	1E+4	4E-6	1E-8	-	-
		Y, see ^{102}Ag	-	9E+3	4E-6	1E-8	-	-
47	Silver-115[2]	D, see ^{102}Ag	3E+4	9E+4	4E-5	1E-7	-	-
			St wall (3E+4)	-	-	-	4E-4	4E-3
		W, see ^{102}Ag	-	9E+4	4E-5	1E-7	-	-
		Y, see ^{102}Ag	-	8E+4	3E-5	1E-7	-	-
48	Cadmium-104[2]	D, all compounds except those given for W and Y	2E+4	7E+4	3E-5	9E-8	34 E-	3E-3
		W, sulfides, halides, and nitrates	-	1E+5	5E-5	2E-7	-	-
		Y, oxides and hydroxides	-	1E+5	5E-5	2E-7	-	-
48	Cadmium-107	D, see ^{104}Cd	2E+4	5E+4	2E-5	8E-8	3E-4	3E-3
		W, see ^{104}Cd	-	6E+4	2E-5	8E-8	-	-
		Y, see ^{104}Cd	-	5E+4	2E-5	7E-8	-	-
48	Cadmium-109	D, see ^{104}Cd	3E+2	4E+1	1E-8	-	-	-
			Kidneys (4E+2)	Kidneys (5E+1)	-	7E-11	6E-6	6E-5
		W, see ^{104}Cd	-	1E+2	5E-8	-	-	-
			-	Kidneys (1E+2)	-	2E-10	-	-
		Y, see ^{104}Cd	-	1E+2	5E-8	2E-10	-	-
48	Cadmium-113m	D, see ^{104}Cd	2E+1	2E+0	1E-9	-	-	-
			Kidneys (4E+1)	Kidneys (4E+0)	-	5E-12	5E-7	5E-6
		W, see ^{104}Cd	-	8E+0	4E-9	-	-	-
			-	Kidneys (1E+1)	-	2E-11	-	-
		Y, see ^{104}Cd	-	1E+1	5E-9	2E-11	-	-
48	Cadmium-113	D, see ^{104}Cd	2E+1	2E+0	9E-10	-	-	-
			Kidneys (3E+1)	Kidneys (3E+0)	-	5E-12	4E-7	4E-6

120.296: continued

			Table I Occupational Values			Table II Effluent Concentrations		Table III Releases to Sewers
			Col. 1	Col. 2	Col. 3	Col. 1	Col. 2	
			oral Ingestion	Inhalation				Monthly Average
Atomic No.	Radionuclide	Class	ALI (µCi)	ALI (µCi)	DAC (µCi/ml)	Air (µCi/ml)	Water (µCi/ml)	Concen-tration (µCi/ml)
		W, see ^{104}Cd	-	8E+0	3E-9	-	-	-
			-	Kidneys (1E+1)	-	2E-11	-	-
		Y, see ^{104}Cd	-	1E+1	6E-9	2E-11	-	-
48	Cadmium-115m	D, see ^{104}Cd	3E+2	5E+1	2E-8	-	4E-6	4E-5
			-	Kidneys (8E+1)	-	1E-10	-	-
		W, see ^{104}Cd	-	1E+2	5E-8	2E-10	-	-
		Y, see ^{104}Cd	-	1E+2	6E-8	2E-10	-	-
48	Cadmium-115	D, see ^{104}Cd	9E+2	13 E+	6E-7	2E-9	-	-
			LLI wall (1E+3)	-	-	-	1E-5	1E-4
		W, see ^{104}Cd	-	1E+3	5E-7	2E-9	-	-
		Y, see ^{104}Cd	-	1E+3	6E-7	2E-9	-	-
48	Cadmium-117m	D, see ^{104}Cd	5E+3	1E+4	5E-6	2E-8	6E-5	6E-4
		W, see ^{104}Cd	-	2E+4	7E-6	2E-8	-	-
		Y, see ^{104}Cd	-	E+ 14	6E-6	2E-8	-	-
48	Cadmium-117	D, see ^{104}Cd	5E+3	1E+4	5E-6	2E-8	6E-5	6E-4
		W, see ^{104}Cd	-	2E+4	7E-6	2E-8	-	-
		Y, see ^{104}Cd	-	1E+4	6E-6	2E-8	-	-
49	Indium-109	D, all compounds except those given for W	2E+4	4E+4	2E-5	6E-8	3E-4	3E-3
		W, oxides, hydroxides, halides, and nitrates	-	6E+4	3E-5	9E-8	-	-
49	Indium-110[2]	D, see ^{109}In	2E+4	4E+4	2E-5	6E-8	2E-4	2E-3
	(69.1 min)	W, see ^{109}In	-	6E+4	2E-5	8E-8	-	-
49	Indium-110	D, see ^{109}In	5E+3	2E+4	7E-6	2E-8	7E-5	7E-4
	(4.9 h)	W, see ^{109}In	-	2E+4	8E-6	3E-8	-	-
49	Indium-111	D, see ^{109}In	4E+3	6E+3	3E-6	9E-9	6E-5	6E-4

120.296: continued

			Table I Occupational Values			Table II Effluent Concentrations		Table III Releases to Sewers
			Col. 1	Col. 2	Col. 3	Col. 1	Col. 2	
			oral Ingestion	Inhalation				Monthly Average
Atomic No.	Radionuclide	Class	ALI (µCi)	ALI (µCi)	DAC (µCi/ml)	Air (µCi/ml)	Water (µCi/ml)	Concen-tration (µCi/ml)
		W, see ^{109}In	-	6E+3	3E-6	9E-9	-	-
49	Indium-112[2]	D, see ^{109}In	2E+5	6E+5	3E-4	9E-7	2E-3	2E-2
		W, see ^{109}In	-	7E+6	3E-4	1E-6	-	-
49	Indium-113m[2]	D, see ^{109}In	5E+4	1E+4	6E-5	2E-7	7E-4	7E-3
		W, see ^{109}In	-	2E+5	8E-5	3E-7	-	-
49	Indium-114m	D, see ^{109}In	3E+2	6E+1	3E-8	9E-11	-	-
			LLI wall (4E+2)	-	-	-	5E-6	5E-5
		W, see ^{109}In	-	1E+2	4E-8	1E-10	-	-
49	Indium-115m	D, see ^{109}In	1E+4	4E+4	2E-5	6E-8	2E-4	2E-3
		W, see ^{109}In	-	5E+4	2E-5	7E-8	-	-
49	Indium-115	D, see ^{109}In	4E+1	1E+0	6E-10	2E-12	5E-7	5E-6
		W, see ^{109}In	-	5E+0	2E-9	8E-12	-	-
49	Indium-116m[2]	D, see ^{109}In	2E+4	8E+4	3E-5	1E-7	3E-5	3E-3
		W, see ^{109}In	-	1E+5	5E-5	2E-7	-	-
49	Indium-117m[2]	D, see ^{109}In	1E+4	3E+4	1E-5	5E-8	2E-4	2E-3
		W, see ^{109}In	-	4E+4	2E-5	6E-8	-	-
49	Indium-117[2]	D, see ^{109}In	6E+4	2E+5	7E-5	2E-7	8E-4	8E-3
		W, see ^{109}In	-	2E+5	9E-5	3E-7	-	-
49	Indium-119m[2]	D, see ^{109}In	4E+4	1E+5	5E-5	2E-7	-	-
			St wall (5E+4)	-	-	-	7E-4	7E-3
		W, see ^{109}In	-	1E+5	6E-5	2E-7	-	-
50	Tin-110	D, all compounds except those given for W	4E+3	1E+4	5E-6	2E-8	5E-5	5E-4
		W, sulfides, oxides, hydroxides, halides, nitrates, and stannic phosphate	-	1E+4	5E-6	2E-8	-	-
50	Tin-111[2]	D, see ^{110}Sn	7E+4	2E+5	9E-5	3E-7	1E-3	1E-2
		W, see ^{110}Sn	-	3E+5	1E-4	4E-7	-	-
50	Tin-113	D, see ^{110}Sn	2E+3	1E+3	5E-7	2E-9	-	-
			LLI wall (2E+3)	-	-	-	3E-5	3E-4
		W, see ^{110}Sn	-	5E+2	2E-7	8E-10	-	-

120.296: continued

			Table I Occupational Values			Table II Effluent Concentrations		Table III Releases to Sewers
			Col. 1	Col. 2	Col. 3	Col. 1	Col. 2	
			oral Ingestion	Inhalation				Monthly Average
Atomic No.	Radionuclide	Class	ALI (µCi)	ALI (µCi)	DAC (µCi/ml)	Air (µCi/ml)	Water (µCi/ml)	Concen-tration (µCi/ml)
50	Tin-117m	D, see ^{110}Sn	2E+3	1E+3	5E-7	-	-	-
			LLI wall (2E+3)	Bone surf (2E+3)	-	3E-9	3E-5	3E-4
		W, see ^{110}Sn	-	1E+3	6E-7	2E-9	-	-
50	Tin-119m	D, see ^{110}Sn	3E+3	2E+3	1E-6	3E-9	-	-
			LLI wall (4E+3)	-	-	-	6E-5	6E-4
		W, see ^{110}Sn	-	1E+3	4E-7	1E-9	-	-
50	Tin-121m	D, see ^{110}Sn	3E+3	9E+2	4E-7	1E-9	-	-
			LLI wall (4E+3)	-	-	-	5E-5	5E-4
		W, see ^{110}Sn	-	5E+2	2E-7	8E-10	-	-
50	Tin-121	D, see ^{110}Sn	6E+3	2E+4	6E-6	2E-8	-	-
			LLI wall (6E+3)	-	-	-	8E-6	8E-4
		W, see ^{110}Sn	-	1E+4	5E-6	2E-8	-	-
50	Tin-123m[2]	D, see ^{110}Sn	5E+4	1E+5	5E-5	2E-7	7E-4	7E-3
		W, see ^{110}Sn	-	1E+5	6E-5	2E-7	-	-
50	Tin-123	D, see ^{110}Sn	5E+2	6E+2	3E-7	9E-10	-	-
			LLI wall (6E+2)	-	-	-	9E-6	9E-5
		W, see ^{110}Sn	-	2E+2	7E-8	2E-10	-	-
50	Tin-125	D, see ^{110}Sn	4E+2	9E+2	4E-7	1E-9	-	-
			LLI wall (5E+2)	-	-	-	6E-6	6E-5
		W, see ^{110}Sn	-	4E+2	1E-7	5E-10	-	-
50	Tin-126	D, see ^{110}Sn	3E+2	6E+1	2E-8	8E-11	4E-6	4E-5
		W, see ^{110}Sn	-	7E+1	38	9E-11	-	-
50	Tin-127	D, see ^{110}Sn	7E+3	2E+4	8E-6	3E-8	9E-5	9E-4
		W, see ^{110}Sn	-	2E+4	8E-6	3E-8	-	-
50	Tin-128[2]	D, see ^{110}Sn	9E+3	3E+4	1E-5	4E-8	1E-4	1E-3
		W, see ^{110}Sn	-	4E+4	1E-5	5E-8	-	-
51	Antimony-115[2]	D, all compounds except those given for W	8E+4	2E+5	1E-4	3E-7	1E-3	1E-2

120.296: continued

Atomic No.	Radionuclide	Class	Table I Occupational Values Col. 1 oral Ingestion ALI (µCi)	Col. 2 Inhalation ALI (µCi)	Col. 3 Inhalation DAC (µCi/ml)	Table II Effluent Concentrations Col. 1 Air (µCi/ml)	Col. 2 Water (µCi/ml)	Table III Releases to Sewers Monthly Average Concen-tration (µCi/ml)
		W, oxides, hydroxides, halides, sulfides, sulfates, and nitrates	-	3E+5	1E-4	4E-7	-	-
51	Antimony-116m[2]	D, see ^{115}Sb	2E+4	7E+4	3E-5	1E-7	3E-4	3E-3
		W, see ^{115}Sb	-	1E+5	6E-5	2E-7	-	-
51	Antimony-116[2]	D, see ^{115}Sb	7E+4	3E+5	1E-4	4E-7	-	-
			St wall (9E+4)	-	-	-	1E-3	1E-2
		W, see ^{115}Sb	-	3E+5	1E-4	5E-7	-	-
51	Antimony-117	D, see ^{115}Sb	7E+4	2E+5	9E-5	3E-7	9E-4	9E-3
		W, see ^{115}Sb	-	3E+5	1E-4	4E-7	-	-
51	Antimony-118m	D, see ^{115}Sb	6E+3	2E+4	8E-6	3E-8	7E-5	7E-4
		W, see ^{115}Sb	5E+3	2E+4	9E-6	3E-8	-	-
51	Antimony-119	D, see ^{115}Sb	2E+4	5E+4	2E-5	6E-8	2E-4	2E-3
		W, see ^{115}Sb	2E+4	3E+4	1E-5	4E-8	-	-
51	Antimony-120[2] (16 min)	D, see ^{115}Sb	1E+5	4E+5	2E-4	6E-7	-	-
			St wall (2E+5)	-	-	-	2E-3	2E-2
		W, see ^{115}Sb	-	5E+5	2E-4	7E-7	-	-
51	Antimony-120	D, see ^{115}Sb	1E+3	2E+3	9E-7	3E-9	1E-5	1E-4
	(5.76 d)	W, see ^{115}Sb	9E+2	1E+3	5E-7	2E-9	-	-
51	Antimony-122	D, see ^{115}Sb	8E+2	2E+3	1E-6	3E-9	-	-
			LLI wall (8E+2)	-	-	-	1E-5	1E-4
		W, see ^{115}Sb	7E+2	1E+3	4E-7	2E-9	-	-
51	Antimony-124m[2]	D, see ^{115}Sb	3E+5	8E+5	4E-4	1E-6	3E-3	3E-2
		W, see ^{115}Sb	2E+5	6E+5	2E-4	8E-7	-	-
51	Antimony-124	D, see ^{115}Sb	6E+2	9E+2	4E-7	1E-9	7E-6	7E-5
		W, see ^{115}Sb	5E+2	2E+2	1E-7	3E-10	-	-
51	Antimony-125	D, see ^{115}Sb	2E+3	2E+3	1E-6	39	3E-5	3E-4
		W, see ^{115}Sb	-	5E+2	2E-7	7E-10	-	-
51	Antimony-126m[2]	D, see ^{115}Sb	5E+4	2E+5	8E-5	3E-7	-	-
			St wall (7E+4)	-	-	-	9E-4	9E-3
		W, see ^{115}Sb	-	2E+5	8E-5	3E-7	-	-
51	Antimony-126	D, see ^{115}Sb	6E+2	1E+3	5E-7	2E-9	7E-6	7E-5

120.296: continued

			Table I Occupational Values			Table II Effluent Concentrations		Table III Releases to Sewers
			Col. 1	Col. 2	Col. 3	Col. 1	Col. 2	
			oral Ingestion	Inhalation				Monthly Average
Atomic No.	Radionuclide	Class	ALI (µCi)	ALI (µCi)	DAC (µCi/ml)	Air (µCi/ml)	Water (µCi/ml)	Concen-tration (µCi/ml)
		W, see ^{115}Sb	5E+2	5E+2	2E-7	7E-10	-	-
51	Antimony-127	D, see ^{115}Sb	8E+2	2E+3	9E-7	3E-9	-	-
			LLI wall (8E+2)	-	-	-	1E-5	1E-4
		W, see ^{115}Sb	7E+2	9E+2	4E-7	1E-9	-	-
51	Antimony-128[2]	D, see ^{115}Sb	8E+4	4E+5	2E-4	5E-7	-	-
	(10.4 min)		St wall (1E+5)	-	-	-	1E-3	1E-2
		W, see ^{115}Sb	-	4E+5	2E-4	6E-7	-	-
51	Antimony-128	D, see ^{115}Sb	1E+3	4E+3	2E-6	6E-9	2E-5	2E-4
	(9.01 h)	W, see ^{115}Sb	-	3E+3	1E-6	5E-9	-	-
51	Antimony-129	D, see ^{115}Sb	3E+3	9E+6	4E-6	1E-8	4E-5	4E-4
		W, see ^{115}Sb	-	9E+3	4E-6	1E-8	-	-
51	Antimony-130[2]	D, see ^{115}Sb	2E+4	6E+4	3E-5	9E-8	3E-4	3E-3
		W, see ^{115}Sb	-	8E+4	3E-5	1E-7	-	-
51	Antimony-131[2]	D, see ^{115}Sb	1E+4	2E+4	1E-5	-	-	-
			Thyroid (2E+4)	Thyroid (4E+4)	-	6E-8	2E-4	2E-3
		W, see ^{115}Sb	-		2E-4	1E-5	-	-
			-	Thyroid (4E+4)	-	6E-8	-	-
52	Tellurium-116	D, all compounds except those given for W	8E+3	2E+4	9E-6	3E-8	1E-4	1E-3
		W, oxides, hydroxides, and nitrates	-	3E+4	1E-5	4E-8	-	-
52	Tellurium-121m	D, see ^{116}Te	5E+2	2E+2	8E-8	-	-	-
			Bone surf (7E+2)	Bone surf (4E+2)	-	5E-10	1E-5	1E-4
		W, see ^{116}Te	-	4E+2	2E-7	6E-10	-	-
52	Tellurium-121	D, see ^{116}Te	3E+3	4E+3	2E-6	6E-9	4E-5	4E-4
		W, see ^{116}Te	-	3E+3	1E-6	E- 49	-	-
52	Tellurium-123m	D, see ^{116}Te	6E+2	3E+3	9E-8	-	-	-
			Bone surf (1E+3)	Bone surf (5E+2)	-	8E-10	1E-5	1E-4
		W, see ^{116}Te	-	5E+2	2E-7	8E-10	-	-
52	Tellurium-123	D, see ^{116}Te	5E+2	2E+2	8E-8		-	-
			Bone surf (1E+3)	Bone surf (5E+2)	-	7E-10	2E-5	2E-4

120.296: continued

			Table I Occupational Values			Table II Effluent Concentrations		Table III Releases to Sewers
			Col. 1	Col. 2	Col. 3	Col. 1	Col. 2	
			oral Ingestion	Inhalation				Monthly Average Concen-
Atomic No.	Radionuclide	Class	ALI (µCi)	ALI (µCi)	DAC (µCi/ml)	Air (µCi/ml)	Water (µCi/ml)	tration (µCi/ml)
		W, see ^{116}Te	-	4E+2	2E-7	-	-	-
			-	Bone surf (1E+3)	-	2E-9	-	-
52	Tellurium-125m	D, see ^{116}Te	1E+3	4E+2	2E-7	-	-	-
			Bone surf (1E+3)	Bone surf (1E+3)	-	1E-9	2E-5	2E-4
		W, see ^{116}Te	-	7E+2	3E-7	1E-9	-	-
52	Tellurium-127m	D, see ^{116}Te	6E+2	3E+2	1E-7	-	9E-6	9E-6
			-	Bone surf (4E+2)	-	6E-10	-	-
		W, see ^{116}Te	-	3E+2	1E-7	1E-0	-	-
52	Tellurium-127	D, see ^{116}Te	7E+3	2E+4	9E-6	3E-8	1E-4	1E-3
		W, see ^{116}Te	-	2E+4	7E-6	2E-8	-	-
52	Tellurium-129m	D, see ^{116}Te	5E+2	6E+2	3E-7	9E-10	7E-6	7E-5
		W, see ^{116}Te	-	2E+2	1E-7	3E-10	-	-
52	Tellurium-129[2]	D, see ^{116}Te	3E+4	6E+4	3E-5	9E-8	4E-4	4E-3
		W, see ^{116}Te	-	7E+4	3E-5	1E-7	-	-
52	Tellurium-131m	D, see ^{116}Te	3E+2	4E+2	2E-7	-	-	-
			Thyroid (6E+2)	Thyroid (1E+3)	-	2E-9	8E-3	8E-5
		W, see ^{116}Te	-	4E+2	2E-7	-	-	-
			-	Thyroid (9E+2)	-	1E-9	-	-
52	Tellurium-131[2]	D, see ^{116}Te	3E+3	5E+3	2E-6	-	-	-
			Thyroid (6E+3)	Thyroid (1E+4)	-	2E-8	8E-5	8E-4
		W, see ^{116}Te	-	8E+3	E- 26	-	-	-
			-	Thyroid (1E+4)	-	2E-8	-	-
52	Tellurium-132	D, see ^{116}Te	2E+2	2E+2	9E-8	-	-	-
			Thyroid (7E+2)	Thyroid (8E+2)	-	1E-9	8E-6	9E-5
		W, see ^{116}Te	-	2E+2	9E-8	-	-	-
			-	Thyroid (6E+2)	-	9E-10	-	-
52	Tellurium-133m[2]	D, see ^{116}Te	3E+3	5E+3	2E-6	-	-	-
			Thyroid (6E+3)	Thyroid (1E+4)	-	2E-8	9E-5	9E-4

120.296: continued

Atomic No.	Radionuclide	Class	Table I Occupational Values Col. 1 oral Ingestion ALI (µCi)	Col. 2 Inhalation ALI (µCi)	Col. 3 Inhalation DAC (µCi/ml)	Table II Effluent Concentrations Col. 1 Air (µCi/ml)	Col. 2 Water (µCi/ml)	Table III Releases to Sewers Monthly Average Concentration (µCi/ml)
		W, see ^{116}Te	-	5E+3	2E-6	-	-	-
			-	Thyroid (1E+4)	-	2E-8	-	-
52	Tellurium-133[2]	D, see ^{116}Te	1E+4	2E+4	9E-6	-	-	-
			Thyroid (3E+4)	Thyroid (6E+4)	-	8E-8	4E-4	4E-3
		W, see ^{116}Te	-	2E+4	9E-6	-	-	-
			-	Thyroid (6E+4)	-	8E-8	-	-
52	Tellurium-134[2]	D, see ^{116}Te	2E+4	2E+4	1E-5	-	-	-
			Thyroid (2E+4)	Thyroid (5E+4)	-	7E-8	3E-4	3E-3
		W, see ^{116}Te	-	2E+4	1E-5	-	-	-
			-	Thyroid (5E+4)	-		7E-8	-
53	Iodine-120m[2]	D, all compounds	1E+4	2E+4	9E-5	3E-8	-	-
			Thyroid (1E+4)	-	-	-	2E-4	2E-3
53	Iodine-120[2]	D, all compounds	4E+3	8E+3	4E-6	-	-	-
			Thyroid (8E+3)	Thyroid (1E+4)	-	2E-8	1E-4	1E-3
53	Iodine-121	D, all compounds	1E+4	2E+4	8E-6	-	-	-
			Thyroid (3E+4)	Thyroid (5E+4)	-	7E-8	4E-4	4E-3
53	Iodine-123	D, all compounds	3E+3	6E+3	3E-6	-	-	-
			Thyroid (1E+4)	Thyroid (2E+4)	-	2E-8	1E-4	1E-3
53	Iodine-124	D, all compounds	5E+1	8E+1	3E-8	-	-	-
			Thyroid (2E+2)	Thyroid (3E+2)	-	4E-10	2E-6	2E-5
53	Iodine-125	D, all compounds	4E+1	6E+1	3E-8	-	-	-
			Thyroid (1E+2)	Thyroid (2E+2)	-	3E-10	2E-6	2E-5
53	Iodine-126	D, all compounds	2E+1	4E+1	1E-8	-	-	-
			Thyroid (7E+1)	Thyroid (1E+2)	-	2E-10	1E-6	1E-5
53	Iodine-128[2]	D, all compounds	4E+4	1E+5	5E-5	2E-7	-	-
			St wall (6E+4)	-	-	-	8E-4	8E-3
53	Iodine-129	D, all compounds	5E+0	9E+0	4E-9	-	-	-

120.296: continued

			Table I Occupational Values			Table II Effluent Concentrations		Table III Releases to Sewers
			Col. 1	Col. 2	Col. 3	Col. 1	Col. 2	
			oral Ingestion	Inhalation				Monthly Average
Atomic No.	Radionuclide	Class	ALI (µCi)	ALI (µCi)	DAC (µCi/ml)	Air (µCi/ml)	Water (µCi/ml)	Concen-tration (µCi/ml)
			Thyroid (2E+1)	Thyroid (3E+1)	-	4E-11	2E-7	2E-6
53	Iodine-130	D, all compounds	4E+2	7E+2	3E-7	-	-	-
			Thyroid (1E+3)	Thyroid (2E+3)	-	3E-9	2E-5	2E-4
53	Iodine-131	D, all compounds	3E+1	5E+1	2E-8	-	-	-
			Thyroid (9E+1)	Thyroid (2E+2)	-	2E-10	1E-6	1E-5
53	Iodine-132m[2]	D, all compounds	4E+3	8E+3	4E-6	-	-	-
			Thyroid (1E+4)	Thyroid (2E+4)	-	3E-8	1E-4	1E-3
53	Iodine-132	D, all compounds	4E+3	8E+3	3E-6	-	-	-
			Thyroid (9E+3)	Thyroid (1E+4)	-	2E-8	1E-4	1E-3
53	Iodine-133	D, all compounds	1E+2	3E+2	1E-7	-	-	-
			Thyroid (5E+2)	Thyroid (9E+2)	-	1E-9	7E-6	7E-5
53	Iodine-134[2]	D, all compounds	2E+4	5E+4	2E-5	6E-8	-	-
			Thyroid (3E+4)	-	-	-	4E-4	4E-3
53	Iodine-135	D, all compounds	8E+2	2E+3	7E-7	-	-	-
			Thyroid (3E+3)	Thyroid (4E+3)	-	6E-9	3E-5	3E-4
54	Xenon-120[2]	Submersion[1]	-	-	1E-5	4E-8	-	-
54	Xenon-121[2]	Submersion[1]	-	-	2E-6	1E-8	-	-
54	Xenon-122	Submersion[1]	-	-	7E-5	3E-7	-	-
54	Xenon-123	Submersion[1]	-	-	66	3E-8	-	-
54	Xenon-125	Submersion[1]	-	-	25	7E-8	-	-
54	Xenon-127	Submersion[1]	-	-	15	6E-8	-	-
54	Xenon-129m	Submersion[1]	-	-	24	9E-7	-	-
54	Xenon-131m	Submersion[1]	-	-	44	2E-6	-	-
54	Xenon-133m	Submersion[1]	-	-	1E-4	6E-7	-	-
54	Xenon-133	Submersion[1]	-	-	1E-4	5E-7	-	-
54	Xenon-135m[2]	Submersion[1]	-	-	9E-6	4E-8	-	-
54	Xenon-135	Submersion[1]	-	-	1E-5	7E-8	-	-
54	Xenon-138[2]	Submersion[1]	-	-	4E-6	2E-8	-	-
55	Cesium-125[2]	D, all compounds	5E+4	1E+5	6E-5	2E-7	-	-

120.296: continued

			Table I Occupational Values			Table II Effluent Concentrations		Table III Releases to Sewers
			Col. 1	Col. 2	Col. 3	Col. 1	Col. 2	
			oral Ingestion	Inhalation				Monthly Average
Atomic No.	Radionuclide	Class	ALI (µCi)	ALI (µCi)	DAC (µCi/ml)	Air (µCi/ml)	Water (µCi/ml)	Concen-tration (µCi/ml)
			St wall (9E+4)	-	-	-	1E-3	1E-2
55	Cesium-127	D, all compounds	6E+4	9E+4	4E-5	1E-7	9E-4	9E-3
55	Cesium-129	D, all compounds	2E+4	3E+4	1E-5	5E-8	3E-4	3E-3
55	Cesium-130[2]	D, all compounds	6E+4	2E+5	8E-5	3E-7	-	-
			St wall (1E+5)	-	-	-	1E-3	1E-2
55	Cesium-131	D, all compounds	2E+4	3E+4	1E-5	4E-8	3E-4	3E-3
55	Cesium-132	D, all compounds	3E+3	4E+3	2E-5	5E-9	4E-5	4E-4
55	Cesium-134m	D, all compounds	1E+5	1E+5	6E-5	2E-7	-	-
			St wall (1E+5)	-	-	-	2E-3	22 E-
55	Cesium-134	D, all compounds	7E+1	1E+2	4E-8	2E-10	9E-7	9E-6
55	Cesium-135m[2]	D, all compounds	1E+5	2E+5	8E-5	3E-7	1E-3	1E-2
55	Cesium-135	D, all compounds	7E+2	1E+3	5E-7	2E-9	1E-5	1E-4
55	Cesium-136	D, all compounds	4E+2	7E+2	3E-7	9E-10	6E-6	6E-5
55	Cesium-137	D, all compounds	1E+2	2E+2	6E-8	2E-10	1E-6	1E-5
55	Cesium-138[2]	D, all compounds	2E+4	6E+4	2E-5	8E-8	-	-
			St wall (3E+4)	-	-	-	4E-4	43 E-
56	Barium-126[2]	D, all compounds	6E+3	2E+4	6E-6	2E-8	8E-5	8E-4
56	Barium-128	D, all compounds	5E+2	2E+3	7E-7	2E-9	7E-6	7E-5
56	Barium-131m[2]	D, all compounds	4E+5	1E+6	6E-4	2E-6	-	-
			St wall (5E+5)	-	-	-	7E-3	72 E-
56	Barium-131	D, all compounds	3E+3	8E+3	3E-6	1E-8	4E-5	4E-4
56	Barium-133m	D, all compounds	2E+3	9E+3	4E-6	1E-8	-	-
			LLI wall (3E+3)	-	-	-	4E-5	4E-4
56	Barium-133	D, all compounds	2E+3	7E+2	3E-7	9E-10	2E-5	2E-4
56	Barium-135m	D, all compounds	3E+3	1E+4	5E-6	2E-8	4E-5	4E-4
56	Barium-139[2]	D, all compounds	1E+4	3E+4	1E-5	4E-8	2E-4	2E-3
56	Barium-140	D, all compounds	5E+2	1E+3	6E-7	2E-9	-	-
			LLI wall (6E+2)	-	-	-	86	8E-5
56	Barium-141[2]	D, all compounds	2E+4	7E+4	3E-5	1E-7	3E-4	3E-3

120.296: continued

			Table I Occupational Values			Table II Effluent Concentrations		Table III Releases to Sewers
			Col. 1	Col. 2	Col. 3	Col. 1	Col. 2	
			oral Ingestion	Inhalation				Monthly Average
Atomic No.	Radionuclide	Class	ALI (µCi)	ALI (µCi)	DAC (µCi/ml)	Air (µCi/ml)	Water (µCi/ml)	Concen-tration (µCi/ml)
56	Barium-142[2]	D, all compounds	5E+4	1E+5	6E-5	2E-7	7E-4	7E-3
57	Lanthanum-131[2]	D, all compounds except those given for W	5E+4	1E+5	5E-5	2E-7	6E-4	6E-3
		W, oxides and hydroxides	-	2E+5	7E-5	2E-7	-	-
57	Lanthanum-132	D, see ^{131}La	3E+3	1E+4	4E-6	1E-8	4E-5	4E-4
		W, see ^{131}La	-	1E+4	5E-6	2E-8	-	-
57	Lanthanum-135	D, see ^{131}La	4E+4	1E+5	4E-5	1E-7	5E-4	5E-3
		W, see ^{131}La	-	94	4E-5	1E-7	-	-
57	Lanthanum-137	D, see ^{131}La	1E+4	6E+1	3E-8		2E-4	2E-3
			-	Liver (7E+1)	-	1E-10	-	-
		W, see ^{131}La	-	3E+2	1E-7	-	-	-
			-	Liver (3E+2)	-	4E-10	-	-
57	Lanthanum-138	D, see ^{131}La	9E+2	4E+0	1E-9	5E-12	1E-5	1E-4
		W, see ^{131}La	-	1E+1	6E-9	2E-11	-	-
57	Lanthanum-140	D, see ^{131}La	6E+2	1E+3	6E-7	2E-9	9E-6	9E-5
		W, see ^{131}La	-	1E+3	5E-7	2E-9	-	-
57	Lanthanum-141	D, see ^{131}La	4E+3	9E+3	4E-6	1E-8	5E-5	5E-4
		W, see ^{131}La	-	1E+4	5E-6	2E-8	-	-
57	Lanthanum-142[2]	D, see ^{131}La	8E+3	2E+4	9E-6	3E-8	1E-4	1E-3
		W, see ^{131}La	-	3E+4	1E-5	5E-8	-	-
57	Lanthanum-143[2]	D, see ^{131}La	4E+4	1E+5	4E-5	1E-7	-	-
			St wall (4E+4)	-	-	-	5E-4	5E-3
		W, see ^{131}La	-	9E+4	4E-5	1E-7	-	-

120.296: continued

			Table I Occupational Values			Table II Effluent Concentrations		Table III Releases to Sewers
			Col. 1	Col. 2	Col. 3	Col. 1	Col. 2	
			oral Ingestion	Inhalation				Monthly Average
Atomic No.	Radionuclide	Class	ALI (µCi)	ALI (µCi)	DAC (µCi/ml)	Air (µCi/ml)	Water (µCi/ml)	Concen-tration (µCi/ml)
58	Cerium-134	W, all compounds except those given for Y	5E+2	7E+2	3E-7	1E-9	-	-
			LLI wall (6E+2)	-	-	-	8E-6	8E-5
		Y, oxides, hydroxides, and fluorides	-	7E+2	3E-7	9E-10	-	-
58	Cerium-135	W, see ^{134}Ce	2E+3	4E+3	2E-6	5E-9	2E-5	2E-4
		Y, see ^{134}Ce	-	4E+3	1E-6	5E-9	-	-
58	Cerium-137m	W, see ^{134}Ce	2E+3	4E+3	2E-6	6E-9	-	-
			LLI wall (2E+3)	-	-	-	3E-5	3E-4
		Y, see ^{134}Ce	-	4E+3	2E-6	5E-9	-	-
58	Cerium-137	W, see ^{134}Ce	5E+4	1E+5	6E-5	2E-7	7E-4	7E-3
		Y, see ^{134}Ce	-	1E+5	5E-5	2E-7	-	-
58	Cerium-139	W, see ^{134}Ce	5E+3	8E+2	3E-7	1E-9	7E-5	7E-4
		Y, see ^{134}Ce	-	7E+2	3E-7	9E-10	-	-
58	Cerium-141	W, see ^{134}Ce	2E+3	7E+2	3E-7	1E-9	-	-
			LLI wall (2E+3)	-	-	-	3E-5	3E-4
		Y, see ^{134}Ce	-	6E+2	2E-7	8E-10	-	-
58	Cerium-143	W, see ^{134}Ce	1E+3	2E+3	8E-7	3E-9	-	-
			LLI wall (1E+3)	-	-	-	2E-5	2E-4
		Y, see ^{134}Ce	-	2E+3	7E-7	2E-9	-	-
58	Cerium-144	W, see ^{134}Ce	2E+2	3E+1	1E-8	4E-11	-	-
			LLI wall (3E+2)	-	-	-	3E-6	3E-5
		Y, see ^{134}Ce	-	1E+1	6E-9	2E-11	-	-
59	Praseodymium-136[2]	W, all compounds except those given for Y	5E+4	2E+5	1E-4	3E-7	-	-
			St wall (7E+4)	-	-	-	1E-3	1E-2
		Y, oxides, hydroxides, carbides, and fluorides	-	2E+5	9E-5	3E-7	-	-
59	Praseodymium-137[2]	W, see ^{136}Pr	4E+4	2E+5	6E-5	2E-7	5E-4	5E-3
		Y, see ^{136}Pr	-	1E+5	65	27	-	-
59	Praseodymium-138m	W, see ^{136}Pr	1E+4	5E+4	25	88	14	13
		Y, see ^{136}Pr	-	4E+4	2E-5	6E-8	-	-
59	Praseodymium-139	W, see ^{136}Pr	4E+4	1E+5	5E-5	2E-7	6E-3	

120.296: continued

			Table I Occupational Values			Table II Effluent Concentrations		Table III Releases to Sewers
			Col. 1	Col. 2	Col. 3	Col. 1	Col. 2	
			oral Ingestion	Inhalation				Monthly Average
Atomic No.	Radionuclide	Class	ALI (µCi)	ALI (µCi)	DAC (µCi/ml)	Air (µCi/ml)	Water (µCi/ml)	Concen-tration (µCi/ml)
		Y, see ^{136}Pr	-	1E+5	5E-5	2E-7	-	-
59	Praseodymium-142m[2]	W, see ^{136}Pr	8E+4	2E+5	7E-5	2E-7	1E-3	1E-2
		Y, see ^{136}Pr	-	1E+5	6E-5	2E-7	-	-
59	Praseodymium-142	W, see ^{136}Pr	1E+3	2E+3	9E-7	3E-9	1E-5	1E-4
		Y, see ^{136}Pr	-	2E+3	8E-7	3E-9	-	-
59	Praseodymium-143	W, see ^{136}Pr	9E+2	8E+2	3E-7	1E-9	-	-
			LLI wall (1E+3)	-	-	-	2E-5	2E-4
		Y, see ^{136}Pr	-	7E+2	3E-7	9E-10	-	-
59	Praseodymium-144[2]	W, see ^{136}Pr	3E+4	1E+5	5E-5	2E-7	-	-
			St wall (4E+4)	-	-	-	6E-4	6E-3
		Y, see ^{136}Pr	-	1E+5	5E-5	2E-7	-	-
59	Praseodymium-145	W, see ^{136}Pr	3E+3	9E+3	4E-6	1E-8	4E-5	4E-4
		Y, see ^{136}Pr	-	8E+3	3E-6	1E-8	-	-
59	Praseodymium-147[2]	W, see ^{136}Pr	5E+4	2E+5	8E-5	3E-7	-	-
			St wall (8E+4)	-	-	-	1E-3	1E-2
		Y, see ^{136}Pr	-	2E+5	8E-5	3E-7	-	-
60	Neodymium-136[2]	W, all compounds except those given for Y	1E+4	6E+4	2E-5	8E-8	2E-4	2E-3
		Y, oxides, hydroxides, carbides, and fluorides	-	5E+4	2E-5	8E-8	-	-
60	Neodymium-138	W, see ^{136}Nd	2E+3	6E+3	3E-6	9E-9	3E-5	3E-4
		Y, see ^{136}Nd	-	5E+3	2E-6	7E-9	-	-
60	Neodymium-139m	W, see ^{136}Nd	5E+3	2E+4	7E-6	2E-8	7E-5	7E-4
		Y, see ^{136}Nd	-	14	6E-6	2E-8	-	-
60	Neodymium-139[2]	W, see ^{136}Nd	9E+4	3E+5	1E-4	5E-7	1E-3	1E-2
		Y, see ^{136}Nd	-	3E+5	1E-4	4E-7	-	-
60	Neodymium-141	W, see ^{136}Nd	25	7E+5	3E-4	1E-6	2E-3	2E-2
		Y, see ^{136}Nd	-	6E+5	3E-4	9E-7	-	-
60	Neodymium-147	W, see ^{136}Nd	1E+3	9E+2	4E-7	1E-9	-	-
			LLI wall (1E+3)	-	-	-	2E-5	2E-4
		Y, see ^{136}Nd	-	8E+2	4E-7	1E-9	-	-

120.296: continued

			Table I Occupational Values			Table II Effluent Concentrations		Table III Releases to Sewers
			Col. 1	Col. 2	Col. 3	Col. 1	Col. 2	
			oral Ingestion	Inhalation				Monthly Average
Atomic No.	Radionuclide	Class	ALI (µCi)	ALI (µCi)	DAC (µCi/ml)	Air (µCi/ml)	Water (µCi/ml)	Concen-tration (µCi/ml)
60	Neodymium-149[2]	W, see ^{136}Nd	1E+4	3E+4	1E-5	4E-8	1E-4	1E-3
		Y, see ^{136}Nd	-	2E+4	1E-5	3E-8	-	-
60	Neodymium-151[2]	W, see ^{136}Nd	7E+4	2E+5	8E-5	3E-7	9E-4	9E-3
		Y, see ^{136}Nd	-	2E+5	8E-5	3E-7	-	-
61	Promethium-141[2]	W, all compounds except those given for Y	5E+4	2E+5	8E-5	3E-7	-	-
			St wall (6E+4)	-	-	-	8E-4	8E-3
		Y, oxides, hydroxides, carbides, and fluorides	-	2E+5	7E-5	2E-7	-	-
61	Promethium-143	W, see ^{141}Pm	5E+3	6E+2	2E-7	8E-10	7E-5	7E-4
		Y, see ^{141}Pm	-	7E+2	3E-7	1E-9	-	-
61	Promethium-144	W, see ^{141}Pm	1E+3	1E+2	5E-8	2E-10	2E-5	2E-4
		Y, see ^{141}Pm	-	1E+2	5E-8	2E-10	-	-
61	Promethium-145	W, see ^{141}Pm	1E+4	2E+2	7E-8	-	1E-4	1E-3
			-	Bone surf (2E+2)	-	3E-10	-	-
		Y, see ^{141}Pm	-	2E+2	8E-8	3E-10	-	-
61	Promethium-146	W, see ^{141}Pm	2E+3	5E+1	2E-8	7E-11	2E-5	2E-4
		Y, see ^{141}Pm	-	4E+1	2E-8	6E-11	-	-
61	Promethium-147	W, see ^{141}Pm	4E+3	1E+2	5E-8	-	-	-
			LLI wall (5E+3)	Bone surf (2E+2)	-	3E-10	7E-5	7E-4
		Y, see ^{141}Pm	-	1E+2	68	2E-10	-	-
61	Promethium-148m	W, see ^{141}Pm	7E+2	3E+2	1E-7	4E-10	1E-5	1E-4
		Y, see ^{141}Pm	-	3E+2	1E-7	5E-10	-	-
61	Promethium-148	W, see ^{141}Pm	4E+2	5E+2	2E-7	8E-10	-	-
			LLI wall (5E+2)	-	-	-	7E-6	7E-5
		Y, see ^{141}Pm	-	5E+2	2E-7	7E-10	-	-
61	Promethium-149	W, see ^{141}Pm	1E+3	2E+3	8E-7	3E-9	-	-

120.296: continued

Atomic No.	Radionuclide	Class	Table I Occupational Values Col. 1 oral Ingestion ALI (µCi)	Table I Occupational Values Col. 2 Inhalation ALI (µCi)	Table I Occupational Values Col. 3 Inhalation DAC (µCi/ml)	Table II Effluent Concentrations Col. 1 Air (µCi/ml)	Table II Effluent Concentrations Col. 2 Water (µCi/ml)	Table III Releases to Sewers Monthly Average Concen-tration (µCi/ml)
			LLI wall (1E+3)	-	-	-	2E-5	2E-4
		Y, see ^{141}Pm	-	2E+3	8E-7	2E-9	-	-
61	Promethium-150	W, see ^{141}Pm	5E+3	2E+4	8E-6	3E-8	7E-5	7E-4
		Y, see ^{141}Pm	-	2E+4	7E-6	2E-8	-	-
61	Promethium-151	W, see ^{141}Pm	2E+3	4E+3	1E-6	5E-9	2E-5	2E-4
		Y, see ^{141}Pm	-	33	1E-6	4E-9	-	-
62	Samarium-141m[2]	W, all compounds	3E+4	1E+5	4E-5	1E-7	4E-4	4E-3
62	Samarium-141[2]	W, all compounds	5E+4	2E+5	8E-5	2E-7	-	-
			St wall (6E+4)	-	-	-	8E-4	8E-3
62	Samarium-142[2]	W, all compounds	8E+3	3E+4	1E-5	4E-8	1E-4	1E-3
62	Samarium-145	W, all compounds	5E+3	5E+2	2E-7	7E-10	8E-5	8E-4
62	Samarium-146	W, all compounds	1E+1	4E+2	1E-1	-	-	-
			Bone surf (3E+1)	Bone surf (6E-2)	-	9E-14	3E-7	3E-6
62	Samarium-147	W, all compounds	2E+1	4E+2	2E-11	-	-	-
			Bone surf (3E+1)	Bone surf (7E-2)	-	1E-13	4E-7	4E-6
62	Samarium-151	W, all compounds	1E+4	1E+2	4E-8	-	-	-
			LLI wall (1E+4)	Bone surf (2E+2)	-	3E-10	2E-4	2E-3
62	Samarium-153	W, all compounds	2E+3	3E+3	1E-6	4E-9	-	-
			LLI wall (2E+3)	-	-	-	3E-5	3E-4
62	Samarium-155[2]	W, all compounds	6E+4	2E+5	9E-5	3E-7	-	-
			St wall (8E+4)	-	-	-	1E-3	1E-2
62	Samarium-156	W, all compounds	5E+3	9E+3	4E-6	1E-8	7E-5	7E-4
63	Europium-145	W, all compounds	2E+3	8E+7	3E-9	2E-5	2E-4	
63	Europium-146	W, all compounds	1E+3	1E+3	5E-7	2E-9	1E-4	1E-4
63	Europium-147	W, all compounds	3E+3	2E+3	7E-7	2E-9	4E-6	4E-4
63	Europium-148	W, all compounds	1E+3	4E+2	1E-7	5E-10	1E-5	1E-4
63	Europium-149	W, all compounds	1E+4	3E+3	1E-6	4E-9	2E-4	2E-3
63	Europium-150 (12.62 h)	W, all compounds	3E+3	8E+3	4E-6	1E-8	4E-5	4E-4

120.296: continued

			Table I Occupational Values			Table II Effluent Concentrations		Table III Releases to Sewers
			Col. 1	Col. 2	Col. 3	Col. 1	Col. 2	
			oral Ingestion	Inhalation				Monthly Average
Atomic No.	Radionuclide	Class	ALI (µCi)	ALI (µCi)	DAC (µCi/ml)	Air (µCi/ml)	Water (µCi/ml)	Concen-tration (µCi/ml)
63	Europium-150 (34.2 y)	W, all compounds	8E+2	2E+1	8E-9	3E-11	1E-5	1E-4
63	Europium-152m	W, all compounds	3E+3	6E+3	3E-6	9E-9	4E-5	4E-4
63	Europium-152	W, all compounds	8E+2	2E+1	1E-8	3E-11	1E-5	1E-4
63	Europium-154	W, all compounds	5E+2	2E+1	8E-9	3E-11	7E-6	7E-5
63	Europium-155	W, all compounds	4E+3	9E+1	4E-8	-	5E-5	5E-4
			-	Bone surf (1E+2)	-	2E-10	-	-
63	Europium-156	W, all compounds	6E+2	5E+2	2E-7	6E-10	8E-6	8E-5
63	Europium-157	W, all compounds	2E+3	5E+3	2E-6	7E-9	3E-5	3E-4
63	Europium-158[2]	W, all compounds	2E+4	6E+4	2E-5	8E-8	3E-4	3E-3
64	Gadolinium-145[2]	D, all compounds except those given for W	5E+4	2E+5	6E-5	2E-7	-	-
			St wall (5E+4)	-	-	-	6E-4	6E-3
		W, oxides, hydroxides, and fluorides	-	2E+5	7E-5	2E-7	-	-
64	Gadolinium-146	D, see ^{145}Gd	1E+3	1E+2	5E-8	2E-10	2E-5	2E-4
		W, see ^{145}Gd	-	3E+2	1E-7	4E-10	-	-
64	Gadolinium-147	D, see ^{145}Gd	2E+3	4E+3	2E-6	6E-9	3E-5	3E-4
		W, see ^{145}Gd	-	4E+3	1E-6	5E-9	-	-
64	Gadolinium-148	D, see ^{145}Gd	1E+1	8E+3	3E-12	-	-	-
			Bone surf (2E+1)	Bone surf (2E-2)	-	3E-4	3E-7	3E-6
		W, see ^{145}Gd	-	32	1E-11	-	-	-
			-	Bone surf (6E-2)	-	8E-14	-	-
64	Gadolinium-149	D, see ^{145}Gd	3E+3	2E+3	9E-7	3E-9	4E-5	4E-4
		W, see ^{145}Gd	-	2E+3	1E-6	3E-9	-	-
64	Gadolinium-151	D, see ^{145}Gd	6E+3	4E+2	2E-7	-	9E-5	9E-4
			-	Bone surf (6E+2)	-	9E-10	-	-
		W, see ^{145}Gd	-	1E+3	5E-7	2E-9	-	-
64	Gadolinium-152	D, see ^{145}Gd	2E+1	1E+2	4E-12	-	-	-
			Bone surf (3E+1)	Bone surf (2E-2)	-	3E-14	4E-7	4E-6

120.296: continued

			Table I Occupational Values			Table II Effluent Concentrations		Table III Releases to Sewers
			Col. 1	Col. 2	Col. 3	Col. 1	Col. 2	
			oral Ingestion	Inhalation				Monthly Average
Atomic No.	Radionuclide	Class	ALI (µCi)	ALI (µCi)	DAC (µCi/ml)	Air (µCi/ml)	Water (µCi/ml)	Concen-tration (µCi/ml)
		W, see ^{145}Gd	-	4E+2	2E-11	-	-	-
			-	Bone surf (8E-2)	-	1E-13	-	-
64	Gadolinium-153	D, see ^{145}Gd	5E+3	1E+2	6E-8	6E-5	6E-4	
			-	Bone surf (2E+2)	-	3E-10	-	-
		W, see ^{145}Gd	-	6E+2	2E-7	8E-10	-	-
64	Gadolinium-159	D, see ^{145}Gd	3E+3	8E+3	3E-6	1E-8	4E-6	4E-4
		W, see ^{145}Gd	-	6E+3	2E-6	8E-9	-	-
65	Terbium-147[2]	W, all compounds	9E+3	3E+4	1E-5	5E-8	1E-4	1E-3
65	Terbium-149	W, all compounds	5E+3	7E+2	3E-7	1E-9	7E-5	7E-4
65	Terbium-150	W, all compounds	5E+3	2E+4	9E-6	3E-8	7E-5	7E-4
65	Terbium-151	W, all compounds	4E+3	9E+3	4E-6	1E-8	5E-5	5E-4
65	Terbium-153	W, all compounds	5E+3	7E+3	3E-6	1E-8	7E-5	7E-4
65	Terbium-154	W, all compounds	2E+3	4E+3	2E-6	6E-9	2E-5	2E-4
65	Terbium-155	W, all compounds	4E+3	8E+3	3E-6	1E-8	8E-5	8E-4
65	Terbium-156m (5.0 h)	W, all compounds	2E+4	3E+4	1E-5	4E-8	2E-4	2E-3
65	Terbium-156m (24.4 h)	W, all compounds	7E+3	8E+3	3E-6	1E-8	1E-4	1E-3
65	Terbium-156	W, all compounds	1E+3	1E+3	6E-7	2E-9	1E-5	1E-4
65	Terbium-157	W, all compounds	5E+4	3E+2	1E-7	-	-	-
			LLI wall (5E+4)	Bone surf (6E+2)	-	8E-10	7E-4	7E-3
65	Terbium-158	W, all compounds	1E+3	2E+1	8E-9	3E-11	2E-5	2E-4
65	Terbium-160	W, all compounds	8E+2	2E+2	9E-8	3E-10	1E-5	1E-4
65	Terbium-161	W, all compounds	2E+3	2E+3	7E-7	2E-9	-	-
			LLI wall (2E+3)	-	-	-	3E-5	3E-4
66	Dysprosium-155	W, all compounds	9E+3	3E+4	1E-5	4E-8	1E-4	1E-3
66	Dysprosium-157	W, all compounds	2E+4	6E+4	3E-5	9E-8	3E-4	3E-3
66	Dysprosium-159	W, all compounds	1E+4	2E+3	1E-6	3E-9	2E-4	2E-3
66	Dysprosium-165	W, all compounds	1E+4	5E+4	2E-5	6E-8	2E-4	2E-3
66	Dysprosium-166	W, all compounds	6E+2	7E+2	3E-7	1E-9	-	-
			LLI wall (8E+2)	-	-	-	1E-5	1E-4

120.296: continued

			Table I Occupational Values			Table II Effluent Concentrations		Table III Releases to Sewers
			Col. 1	Col. 2	Col. 3	Col. 1	Col. 2	
			oral Ingestion	Inhalation				Monthly Average
Atomic No.	Radionuclide	Class	ALI (µCi)	ALI (µCi)	DAC (µCi/ml)	Air (µCi/ml)	Water (µCi/ml)	Concen-tration (µCi/ml)
67	Holmium-155[2]	W, all compounds	4E+4	2E+5	6E-5	2E-7	6E-4	6E-3
67	Holmium-157[2]	W, all compounds	3E+5	1E+6	6E-4	2E-6	4E-3	4E-2
67	Holmium-159[2]	W, all compounds	1E+5	1E+6	4E-4	1E-6	3E-3	3E-2
67	Holmium-161	W, all compounds	1E+5	4E+5	2E-4	6E-7	1E-3	1E-2
67	Holmium-162m[2]	W, all compounds	5E+4	3E+5	1E-4	4E-7	7E-4	7E-3
67	Holmium-162[2]	W, all compounds	5E+5	2E+6	1E-3	3E-6	-	-
			St wall (8E+5)	-	-	-	1E-2	1E-1
67	Holmium-164m[2]	W, all compounds	1E+5	3E+5	1E-4	4E-7	1E-3	1E-2
67	Holmium-164[2]	W, all compounds	2E+5	6E+5	3E-4	9E-7	-	-
			St wall (2E+5)	-	-	-	3E-3	3E-2
67	Holmium-166m	W, all compounds	6E+2	7E+0	3E-9	9E-12	9E-6	9E-5
67	Holmium-166	W, all compounds	9E+2	2E+3	7E-7	2E-9	-	-
			LLI wall (9E+2)	-	-	-	1E-5	1E-4
67	Holmium-167	W, all compounds	2E+4	6E+4	2E-5	8E-8	2E-4	2E-3
68	Erbium-161	W, all compounds	2E+4	6E+4	3E-5	9E-8	2E-4	2E-3
68	Erbium-165	W, all compounds	6E+4	2E+5	8E-5	3E-7	9E-4	9E-3
68	Erbium-169	W, all compounds	3E+3	3E+3	1E-6	4E-9	-	-
			LLI wall (4E+3)	-	-	-	5E-5	5E-4
68	Erbium-171	W, all compounds	4E+3	1E+4	4E-6	1E-8	5E-5	5E-4
68	Erbium-172	W, all compounds	1E+3	1E+3	6E-7	2E-9	-	-
			LLI wall (1E+3)	-	-	-	2E-5	2E-4
69	Thulium-162[2]	W, all compounds	7E+4	3E+5	1E-4	4E-7	-	-
			St wall (7E+4)	-	-	-	1E-3	1E-2
69	Thulium-166	W, all compounds	4E+3	1E+4	6E-6	2E-8	6E-5	6E-4
69	Thulium-167	W, all compounds	2E+3	2E+3	8E-7	3E-9	-	-
			LLI wall (2E+3)	-	-	-	3E-5	3E-4
69	Thulium-170	W, all compounds	8E+2	2E+2	9E-8	31E-0	-	-
			LLI wall (1E+3)	-	-	-	1E-5	1E-4
69	Thulium-171	W, all compounds	1E+4	3E+2	1E-7	-	-	-

120.296: continued

Atomic No.	Radionuclide	Class	Table I Occupational Values Col. 1 oral Ingestion ALI (µCi)	Col. 2 Inhalation ALI (µCi)	Col. 3 Inhalation DAC (µCi/ml)	Table II Effluent Concentrations Col. 1 Air (µCi/ml)	Col. 2 Water (µCi/ml)	Table III Releases to Sewers Monthly Average Concen-tration (µCi/ml)
			LLI wall (1E+4)	Bone surf (6E+2)	-	8E-10	2E-4	2E-3
69	Thulium-172	W, all compounds	7E+2	1E+3	5E-7	2E-9	-	-
			LLI wall (8E+2)	-	-	-	1E-5	1E-4
69	Thulium-173	W, all compounds	4E+3	1E+4	5E-6	2E-8	6E-5	6E-4
69	Thulium-175[2]	W, all compounds	7E+4	3E+5	1E-4	4E-7	-	-
			St wall (9E+4)	-	-	-	1E-3	1E-2
70	Ytterbium-162[2]	W, all compounds except those given for Y	7E+4	3E+5	1E-4	4E-7	1E-3	1E-2
		Y, oxides, hydroxides, and fluorides	-	3E+5	1E-4	4E-7	-	-
70	Ytterbium-166	W, see ^{162}Yb	1E+3	2E+3	8E-7	3E-9	2E-5	2E-4
		Y, see ^{162}Yb	-	2E+3	8E-7	3E-9	-	-
70	Ytterbium-167[2]	W, see ^{162}Yb	3E+5	8E+5	3E-4	1E-6	4E-3	4E-2
		Y, see ^{162}Yb	-	7E+5	3E-4	1E-6	-	-
70	Ytterbium-169	W, see ^{162}Yb	2E+3	8E+2	4E-7	1E-9	2E-5	2E-4
		Y, see ^{162}Yb	-	7E+2	3E-7	1E-9	-	-
70	Ytterbium-175	W, see ^{162}Yb	3E+3	4E+3	1E-6	5E-9	-	-
			3E+3	-	-	-	4E-5	4E-4
		Y, see ^{162}Yb	-	3E+3	1E-6	5E-9	-	-
70	Ytterbium-177[2]	W, see ^{162}Yb	2E+4	5E+4	2E-5	7E-8	2E-4	2E-3
		Y, see ^{162}Yb	-	5E+4	2E-5	6E-8	-	-
70	Ytterbium-178[2]	W, see ^{162}Yb	1E+4	4E+4	2E-5	6E-8	2E-4	2E-3
		Y, see ^{162}Yb	-	4E+4	2E-5	5E-8	-	-
71	Lutetium-169	W, all compounds except those given for Y	3E+3	4E+3	2E-6	6E-9	3E-5	3E-4
		Y, oxides, hydroxides, and fluorides	-	4E+3	2E-6	6E-9	-	-
71	Lutetium-170	W, see ^{169}Lu		1E+3	2E-3	9E-7	3E-9	2E-5
24		Y, see ^{169}Lu	-	2E+3	8E-7	39 E-	-	-
71	Lutetium-171	W, see ^{169}Lu	2E+3	2E+3	8E-7	3E-9	3E-5	3E-4

120.296: continued

			Table I Occupational Values			Table II Effluent Concentrations		Table III Releases to Sewers
			Col. 1	Col. 2	Col. 3	Col. 1	Col. 2	
			oral Ingestion	Inhalation				Monthly Average
Atomic No.	Radionuclide	Class	ALI (µCi)	ALI (µCi)	DAC (µCi/ml)	Air (µCi/ml)	Water (µCi/ml)	Concen-tration (µCi/ml)
		Y, see ^{169}Lu	-	2E+3	8E-7	3E-9	-	-
71	Lutetium-172	W, see ^{169}Lu	1E+3	1E+3	5E-7	2E-9	1E-5	1E-4
		Y, see ^{169}Lu	-	1E+3	5E-7	29	-	-
71	Lutetium-173	W, see ^{169}Lu	5E+3	3E+2	1E-7	-	7E-5	7E-4
			-	Bone surf (5E+2)	-	6E-10	-	-
		Y, see ^{169}Lu	-	3E+2	1E-7	4E-10	-	-
71	Lutetium-174m	W, see ^{169}Lu	2E+3	2E+2	1E-7	-	-	-
			LLI wall (3E+3)	Bone surf (3E+2)	-	5E-10	4E-5	4E-4
		Y, see ^{169}Lu	-	2E+2	9E-8	3E-10	-	-
71	Lutetium-174	W, see ^{169}Lu	5E+3	1E+2	5E-8	-	7E-5	7E-4
			-	Bone surf (2E+2)	-	3E-10	-	-
		Y, see ^{169}Lu	-	2E+2	6E-8	2E-10	-	-
71	Lutetium-176m	W, see ^{169}Lu	8E+3	3E+4	1E-5	3E-8	1E-4	1E-3
		Y, see ^{169}Lu	-	2E+4	9E-6	38	-	-
71	Lutetium-176	W, see ^{169}Lu	7E+2	5E+0	2E-9	-	1E-5	1E-4
			-	Bone surf (1E+1)	-	2E-11	-	-
		Y, see ^{169}Lu	-	8E+0	3E-9	1E-11	-	-
71	Lutetium-177m	W, see ^{169}Lu	7E+2	1E+2	5E-8	-	1E-5	1E-4
			-	Bone surf (1E+2)	-	2E-10	-	-
		Y, see ^{169}Lu	-	8E+1	3E-8	1E-0	-	-
71	Lutetium-177	W, see ^{169}Lu	2E+3	2E+3	9E-7	3E-9	-	-
			LLI wall (3E+3)	-	-	-	4E-5	4E-4
		Y, see ^{169}Lu	-	2E+3	9E-7	3E-9	-	-
71	Lutetium-178m[2]	W, see ^{169}Lu	5E+4	2E+5	8E-5	3E-7	-	-
			St. wall (6E+4)	-	-	-	8E-4	8E-3
		Y, see ^{169}Lu	-	2E+5	7E-5	2E-7	-	-
71	Lutetium-178[2]	W, see ^{169}Lu	4E+4	1E+5	5E-5	27	-	-
			St wall (4E+4)	-	-	-	6E-4	6E-3
		Y, see ^{169}Lu	-	1E+5	5E-5	2E-7	-	-

120.296: continued

			Table I Occupational Values			Table II Effluent Concentrations		Table III Releases to Sewers
			Col. 1	Col. 2	Col. 3	Col. 1	Col. 2	
			oral Ingestion	Inhalation				Monthly Average
Atomic No.	Radionuclide	Class	ALI (µCi)	ALI (µCi)	DAC (µCi/ml)	Air (µCi/ml)	Water (µCi/ml)	Concen-tration (µCi/ml)
71	Lutetium-179	W, see ^{169}Lu	6E+3	2E+4	8E-6	3E-8	9E-5	9E-4
		Y, see ^{169}Lu	-	2E+4	6E-6	3E-8	-	-
72	Hafnium-170	D, all compounds except those given for W	3E+3	6E+3	2E-6	89 E-	4E-5	4E-4
		W, oxides, hydroxides, carbides, and nitrates	-	5E+3	2E-6	6E-9	-	-
72	Hafnium-172	D, see ^{170}Hf	1E+3	9E+0	4E-9	-	2E-5	2E-4
			-	Bone surf (2E+1)	-	3E-11	-	-
		W, see ^{170}Hf	-	41 E+	2E-8	-	-	-
			-	Bone surf (6E+1)	-	8E-11	-	-
72	Hafnium-173	D, see ^{170}Hf	5E+3	1E+4	5E-6	2E-8	7E-5	7E-4
		W, see ^{170}Hf	-	1E+4	5E-6	2E-8	-	-
72	Hafnium-175	D, see ^{170}Hf	3E+5	9E+2	4E-7	-	4E-5	4E-4
			-	Bone surf (1E+3)	-	1E-9	-	-
		W, see ^{170}Hf	-	1E+3	5E-7	2E-9	-	-
72	Hafnium-177m[2]	D, see ^{170}Hf	2E+4	6E+4	2E-5	8E-8	3E-4	3E-3
		W, see ^{170}Hf	-	9E+4	4E-5	1E-7	-	-
72	Hafnium-178m	D, see ^{170}Hf	3E+2	1E+0	5E-10	-	3E-6	3E-5
			-	Bone surf (2E+0)	-	3E-12	-	-
		W, see ^{170}Hf	-	5E+10	2E-9	-	-	-
			-	Bone surf (9E+0)	-	1E-11	-	-
72	Hafnium-179m	D, see ^{170}Hf	1E+3	3E+2	1E-7	-	1E-5	1E-4
			-	Bone surf (6E+2)	-	8E-10	-	-
		W, see ^{170}Hf	-	6E+2	3E-7	8E-10	-	-
72	Hafnium-180m	D, see ^{170}Hf	7E+3	2E+4	9E-6	3E-8	1E-4	1E-3
		W, see ^{170}Hf	-	3E+4	1E-4	4E-8	-	-
72	Hafnium-181	D, see ^{170}Hf	13 E+	2E+2	7E-8	-	2E-5	2E-4
			-	Bone surf (4E+2)	-	6E-10	-	-

120.296: continued

			Table I Occupational Values			Table II Effluent Concentrations		Table III Releases to Sewers
			Col. 1	Col. 2	Col. 3	Col. 1	Col. 2	
			oral Ingestion	Inhalation				Monthly Average
Atomic No.	Radionuclide	Class	ALI (µCi)	ALI (µCi)	DAC (µCi/ml)	Air (µCi/ml)	Water (µCi/ml)	Concen-tration (µCi/ml)
		W, see ^{170}Hf	-	4E+2	2E-7	6E-10	-	-
72	Hafnium-182m[2]	D, see ^{170}Hf	4E+4	9E+4	4E-5	1E-7	5E-4	5E-3
		W, see ^{170}Hf	-	1E+5	6E-5	2E-7	-	-
72	Hafnium-182	D, see ^{170}Hf	2E+2	8E+1	3E-10	-	-	-
			Bone surf (4E+2)	Bone surf (2E+0)	-	2E-12	5E-6	5E-5
		W, see ^{170}Hf	-	3E+0	1E-9	-	-	-
			-	Bone surf (7E+0)	-	1E-11	-	-
72	Hafnium-183[2]	D, see ^{170}Hf	2E+4	5E+4	2E-5	6E-8	3E-4	33
		W, see ^{170}Hf	-	6E+4	2E-5	8E-8	-	-
72	Hafnium-184	D, see ^{170}Hf	E+ 23	8E+3	36	1E-8	3E-5	3E-4
		W, see ^{170}Hf	-	6E+3	3E-6	9E-9	-	-
73	Tantalum-172[2]	W, all compounds except those given for Y	4E+4	1E+5	5E-5	2E-7	5E-4	5E-3
		Y, elemental Ta, oxides, hydroxides, halides, carbides, nitrates, and nitrides	-	1E+5	4E-5	1E-7	-	-
73	Tantalum-173	W, see ^{172}Ta	7E+3	2E+4	8E-6	3E-8	9E-6	9E-4
		Y, see ^{172}Ta	-	2E+4	7E-6	2E-8	-	-
73	Tantalum-174[2]	W, see ^{172}Ta	3E+4	1E+5	4E-5	1E-7	4E-4	4E-3
		Y, see ^{172}Ta	-	9E+4	4E-5	1E-7	-	-
73	Tantalum-175	W, see ^{172}Ta	6E+3	2E+4	7E-6	2E-8	8E-4	8E-4
		Y, see ^{172}Ta	-	1E+4	6E-6	3E-8	-	-
73	Tantalum-176	W, see ^{172}Ta	4E+3	1E+4	5E-6	2E-8	5E-5	5E-4
		Y, see ^{172}Ta	-	1E+4	5E-6	2E-8	-	-
73	Tantalum-177	W, see ^{172}Ta	1E+4	2E+4	8E-6	3E-8	2E-4	2E-3
		Y, see ^{172}Ta	-	2E+4	7E-6	2E-8	-	-
73	Tantalum-178	W, see ^{172}Ta	2E+4	9E+4	4E-5	1E-7	2E-4	2E-3
		Y, see ^{172}Ta	-	7E+4	3E-5	1E-4	-	-
73	Tantalum-179	W, see ^{172}Ta	2E+4	5E+3	2E-6	8E-9	3E-4	3E-3
		Y, see ^{172}Ta	-	9E+2	4E-7	1E-9	-	-
73	Tantalum-180m	W, see ^{172}Ta	2E+4	7E+4	3E-5	9E-8	3E-4	3E-3
		Y, see ^{172}Ta	-	6E+4	2E-5	8E-8	-	-

120.296: continued

			Table I Occupational Values			Table II Effluent Concentrations		Table III Releases to Sewers
			Col. 1	Col. 2	Col. 3	Col. 1	Col. 2	
			oral Ingestion	Inhalation				Monthly Average
Atomic No.	Radionuclide	Class	ALI (µCi)	ALI (µCi)	DAC (µCi/ml)	Air (µCi/ml)	Water (µCi/ml)	Concen-tration (µCi/ml)
73	Tantalum-180	W, see ^{172}Ta	1E+3	4E+2	2E-7	6E-10	2E-5	2E-4
		Y, see ^{172}Ta	-	2E+1	1E-8	3E-11	-	-
73	Tantalum-182m[2]	W, see ^{172}Ta	2E+5	5E+5	2E-4	8E-7	-	-
			St wall (2E+5)	-	-	-	3E-3	3E-2
		Y, see ^{172}Ta	-	4E+5	2E-4	6E-7	-	-
73	Tantalum-182	W, see ^{172}Ta	8E+2	3E+2	1E-7	5E-10	1E-5	1E-4
		Y, see ^{172}Ta	-	1E+2	6E-8	2E-10	-	-
73	Tantalum-183	W, see ^{172}Ta	9E+2	1E+3	5E-7	2E-9	-	-
			LLI wall (1E+3)	-	-	-	2E-5	2E-4
		Y, see ^{172}Ta	-	1E+3	4E-7	1E-9	-	-
73	Tantalum-184	W, see ^{172}Ta	2E+3	5E+3	2E-6	8E-9	3E-5	3E-4
		Y, see ^{172}Ta	-	5E+3	2E-6	7E-8	-	-
73	Tantalum-185[2]	W, see ^{172}Ta	3E+4	7E+4	3E-5	1E-7	4E-4	4E-3
		Y, see ^{172}Ta	-	6E+4	3E-5	9E-8	-	-
73	Tantalum-186[2]	W, see ^{172}Ta	5E+4	2E+6	1E-4	3E-7	-	-
			St wall (7E+4)	-	-	-	1E-3	1E-2
		Y, see ^{172}Ta	-	2E+5	9E-5	3E-7	-	-
74	Tungsten-176	D, all compounds	1E+4	5E+4	2E-5	7E-8	1E-4	1E-3
74	Tungsten-177	D, all compounds	2E+4	9E+4	4E-5	1E-7	3E-4	3E-3
74	Tungsten-178	D, all compounds	5E+3	2E+4	8E-6	3E-8	7E-4	7E-4
74	Tungsten-179[2]	D, all compounds	5E+5	2E+6	7E-4	2E-6	7E-3	7E-2
74	Tungsten-181	D, all compounds	2E+4	3E+4	1E-5	5E-8	2E-4	2E-3
74	Tungsten-185	D, all compounds	2E+3	7E+6	3E-6	9E-9	-	-
				-	-	-	4E-5	4E-4
74	Tungsten-187	D, all compounds	2E+3	9E+3	4E-6	1E-8	3E-5	3E-4
74	Tungsten-188	D, all compounds	4E+3	1E+3	5E-7	2E-9	-	-
			LLI wall (5E+2)	-	-	-	7E-6	7E-5
75	Rhenium-177[2]	D, all compounds except those given for W	9E+4	3E+5	1E-4	4E-7	-	-
			St wall (1E+5)	-	-	-	2E-3	2E-2
		W, oxides, hydroxides, and nitrates	-	4E+5	1E-4	5E-7	-	-

120.296: continued

			Table I Occupational Values			Table II Effluent Concentrations		Table III Releases to Sewers
			Col. 1	Col. 2	Col. 3	Col. 1	Col. 2	
			oral Ingestion	Inhalation				Monthly Average Concen-
Atomic No.	Radionuclide	Class	ALI (µCi)	ALI (µCi)	DAC (µCi/ml)	Air (µCi/ml)	Water (µCi/ml)	tration (µCi/ml)
75	Rhenium-178[2]	D, see ^{177}Re	7E+4	3E+5	1E-4	4E-7	-	-
			St wall (1E+5)	-	-	-	1E-3	1E-2
		W, see ^{177}Re	-	3E+5	1E-4	4E-7	-	-
75	Rhenium-181	D, see ^{177}Re	5E+3	9E+3	4E-6	1E-8	7E-5	7E-4
		W, see ^{177}Re	-	9E+3	4E-6	1E-8	-	-
75	Rhenium-182	D, see ^{177}Re	7E+6	1E+4	5E-6	2E-8	9E-5	9E-4
	(12.7 h)	W, see ^{177}Re	-	2E+4	6E-6	2E-8	-	-
75	Rhenium-182	D, see ^{177}Re	1E+3	2E+3	1E-6	3E-9	2E-5	2E-4
	(64.0 h)	W, see ^{177}Re	-	2E+3	9E-7	3E-9	-	-
75	Rhenium-184m	D, see ^{177}Re	2E+3	3E+3	1E-6	4E-9	3E-5	3E-4
		W, see ^{177}Re	-	4E+2	2E-7	6E-10	-	-
75	Rhenium-184	D, see ^{177}Re	2E+3	4E+3	1E-6	5E-9	3E-5	3E-4
		W, see ^{177}Re	-	1E+3	6E-7	2E-9	-	-
75	Rhenium-186m	D, see ^{177}Re	1E+3	2E+3	7E-7	-	-	-
			St wall (2E+3)	St wall (2E+3)	-	3E-9	2E-5	2E-4
		W, see ^{177}Re	-	2E+2	6E-8	2E-10	-	-
75	Rhenium-186	D, see ^{177}Re	2E+3	3E+3	1E-6	4E-9	3E-5	3E-4
		W, see ^{177}Re	-	2E+3	7E-7	2E-9	-	-
75	Rhenium-187	D, see ^{177}Re	6E+5	8E+5	4E-4	-	8E-3	8E-2
			-	St wall (9E+5)	-	1E-6	-	-
		W, see ^{177}Re	-	1E+5	4E-5	1E-7	-	-
75	Rhenium-188m[2]	D, see ^{177}Re	8E+4	1E+5	6E-5	2E-7	1E-3	1E-2
		W, see ^{177}Re	-	1E+5	6E-5	2E-7	-	-
75	Rhenium-188	D, see ^{177}Re	2E+3	3E+3	1E-6	4E-9	2E-5	2E-4

120.296: continued

Atomic No.	Radionuclide	Class	Table I Occupational Values Col. 1 oral Ingestion ALI (µCi)	Table I Occupational Values Col. 2 Inhalation ALI (µCi)	Table I Occupational Values Col. 3 Inhalation DAC (µCi/ml)	Table II Effluent Concentrations Col. 1 Air (µCi/ml)	Table II Effluent Concentrations Col. 2 Water (µCi/ml)	Table III Releases to Sewers Monthly Average Concen-tration (µCi/ml)
		W, see ^{177}Re	-	3E+3	1E-4	4E-9	-	-
75	Rhenium-189	D, see ^{177}Re	3E+3	5E+3	2E-6	7E-9	4E-5	4E-4
		W, see ^{177}Re	-	4E+3	2E-6	6E-9	-	-
76	Osmium-180[2]	D, all compounds except those given for W and Y	1E+5	4E+5	2E-4	4E-7	1E-3	1E-2
		W, halides and nitrates	-	5E+5	2E-4	7E-7	-	-
		Y, oxides and hydroxides	-	5E+5	2E-4	6E-7	-	-
76	Osmium-181[2]	D, see ^{180}Os	1E+4	4E+4	2E-5	6E-8	2E-4	2E-3
		W, see ^{180}Os	-	5E+4	2E-5	6E-8	-	-
		Y, see ^{180}Os	-	4E+4	2E-5	6E-8	-	-
76	Osmium-182	D, see ^{180}Os	2E+3	6E+3	2E-6	8E-9	3E-5	3E-4
		W, see ^{180}Os	-	4E+3	2E-6	6E-9	-	-
		Y, see ^{180}Os	-	4E+3	2E-6	6E-9	-	-
76	Osmium-185	D, see ^{180}Os	2E+3	5E+2	2E-7	7E-10	3E-5	3E-4
		W, see ^{180}Os	-	8E+2	3E-7	1E-9	-	-
		Y, see ^{180}Os	-	8E+2	3E-7	1E-9	-	-
76	Osmium-189m	D, see ^{180}Os	8E+4	2E+5	1E-4	3E-7	1E-3	1E-2
		W, see ^{180}Os	-	2E+5	9E-5	3E-7	-	-
		Y, see ^{180}Os	-	2E+5	7E-5	2E-7	-	-
76	Osmium-191m	D, see ^{180}Os	1E+4	3E+4	1E-5	4E-8	2E-4	2E-3
		W, see ^{180}Os	-	2E+4	8E-6	3E-8	-	-
		Y, see ^{180}Os	-	2E+4	7E-6	2E-8	-	-
76	Osmium-191	D, see ^{180}Os	2E+5	2E+3	9E-7	3E-9	-	-
			LLI wall (3E+3)	-	-	-	3E-5	3E-4
		W, see ^{180}Os	-	2E+3	7E-7	2E-9	-	-
		Y, see ^{180}Os	-	1E+3	6E-7	2E-9	-	-
76	Osmium-193	D, see ^{180}Os	2E+3	5E+3	2E-6	6E-9	-	-
			LLI wall (2E+3)	-	-	-	2E-5	2E-4
		W, see ^{180}Os	-	3E+3	1E-6	4E-9	-	-
		Y, see ^{180}Os	-	3E+3	1E-6	4E-9	-	-
76	Osmium-194	D, see ^{180}Os	4E+2	4E+1	2E-8	6E-11	-	-

120.296: continued

			Table I Occupational Values			Table II Effluent Concentrations		Table III Releases to Sewers
			Col. 1	Col. 2	Col. 3	Col. 1	Col. 2	
			oral Ingestion	Inhalation				Monthly Average
Atomic No.	Radionuclide	Class	ALI (µCi)	ALI (µCi)	DAC (µCi/ml)	Air (µCi/ml)	Water (µCi/ml)	Concen-tration (µCi/ml)
			LLI wall (6E+2)	-	-	-	8E-6	8E-5
		W, see ^{180}Os	-	6E+1	2E-8	8E-11	-	-
		Y, see ^{180}Os	-	8E+0	E- 39	1E-11	-	-
77	Iridium-182[2]	D, all compounds except those given for W and Y	4E+4	1E+5	6E-5	2E-7	-	-
			St wall (4E+4)	-	-	-	6E-4	6E-3
		W, halides, nitrates, and metallic iridium	-	2E+5	6E-5	2E-7	-	-
		Y, oxides and hydroxides	-	1E+5	5E-5	2E-7	-	-
77	Iridium-184	D, see ^{182}Ir	8E+3	2E+4	1E-5	3E-8	1E-4	1E-3
		W, see ^{182}Ir	-	3E+4	1E-5	5E-8	-	-
		Y, see ^{182}Ir	-	3E+4	1E-5	4E-8	-	-
77	Iridium-185	D, see ^{182}Ir	5E+3	1E+4	5E-6	2E-8	7E-5	7E-4
		W, see ^{182}Ir	-	1E+4	5E-6	2E-8	-	-
		Y, see ^{182}Ir	-	1E+4	4E-6	1E-8	-	-
77	Iridium-186	D, see ^{182}Ir	2E+3	8E+3	3E-6	1E-8	3E-5	3E-4
		W, see ^{182}Ir	-	6E+3	3E-6	3E-9	-	-
		Y, see ^{182}Ir	-	6E+3	2E-6	8E-9	-	-
77	Iridium-187	D, see ^{182}Ir	1E+4	3E+4	1E-5	5E-8	1E-4	13
		W, see ^{182}Ir	-	3E+4	1E-5	4E-8	-	-
		Y, see ^{182}Ir	-	3E+4	1E-5	4E-8	-	-
77	Iridium-188	D, see ^{182}Ir	2E+3	5E+3	2E-6	6E-9	3E-5	3E-4
		W, see ^{182}Ir	-	4E+5	1E-6	5E-9	-	-
		Y, see ^{182}Ir	-	3E+3	1E-6	5E-9	-	-
77	Iridium-189	D, see ^{182}Ir	5E+3	5E+3	2E-6	7E-9	-	-
			LLI wall (5E+3)	-	-	-	7E-5	7E-4
		W, see ^{182}Ir	-	4E+3	2E-6	5E-9	-	-
		Y, see ^{182}Ir	-	4E+3	1E-6	5E-9	-	-
77	Iridium-190m[2]	D, see ^{182}Ir	2E+6	2E+5	8E-5	3E-7	2E-3	2E-2
		W, see ^{182}Ir	-	2E+5	9E-5	3E-7	-	-

120.296: continued

			Table I Occupational Values			Table II Effluent Concentrations		Table III Releases to Sewers
			Col. 1	Col. 2	Col. 3	Col. 1	Col. 2	
			oral Ingestion	Inhalation				Monthly Average
Atomic No.	Radionuclide	Class	ALI (µCi)	ALI (µCi)	DAC (µCi/ml)	Air (µCi/ml)	Water (µCi/ml)	Concen-tration (µCi/ml)
		Y, see ^{182}Ir	-	2E+5	8E-5	3E-7	-	-
77	Iridium-190	D, see ^{182}Ir	1E+3	9E+2	4E-7	1E-9	1E-5	1E-4
		W, see ^{182}Ir	-	1E+3	4E-7	1E-9	-	-
		Y, see ^{182}Ir	-	9E+2	4E-7	1E-9	-	-
77	Iridium-192m	D, see ^{182}Ir	3E+3	9E+1	4E-8	1E-10	4E-5	4E-4
		W, see ^{182}Ir	-	2E+2	9E-8	3E-10	-	-
		Y, see ^{182}Ir	-	2E+1	6E-9	2E-11	-	-
77	Iridium-192	D, see ^{182}Ir	9E+2	3E+2	1E-7	4E-10	1E-5	1E-4
		W, see ^{182}Ir	-	4E+2	2E-7	6E-10	-	-
		Y, see ^{182}Ir	-	2E+2	9E-8	3E-10	-	-
77	Iridium-194m	D, see ^{182}Ir	6E+3	9E+1	4E-7	1E-10	9E-6	9E-5
		W, see ^{182}Ir	-	2E+2	7E-8	2E-10	-	-
		Y, see ^{182}Ir	-	1E+2	4E-8	1E-10	-	-
77	Iridium-194	D, see ^{182}Ir	1E+3	3E+3	1E-6	4E-9	1E-5	1E-4
		W, see ^{182}Ir	-	2E+3	9E-7	3E-9	-	-
		Y, see ^{182}Ir	-	2E+3	8E-7	3E-9	-	-
77	Iridium-195m	D, see ^{182}Ir	8E+3	2E+4	1E-5	3E-8	1E-4	1E-3
		W, see ^{182}Ir	-	2E+4	1E-5	4E-8	-	-
		Y, see ^{182}Ir	-	24	9E-6	3E-8	-	-
77	Iridium-195	D, see ^{182}Ir	1E+4	44	2E-5	6E-8	2E-4	2E-3
		W, see ^{182}Ir	-	54	2E-5	7E-8	-	-
		Y, see ^{182}Ir	-	44	2E-5	6E-8	-	-
78	Platinum-186	D, all compounds	1E+4	44	2E-5	5E-8	2E-4	2E-3
78	Platinum-188	D, all compounds	2E+3	23	7E-7	2E-9	2E-5	2E-4
78	Platinum-189	D, all compounds	1E+4	34	1E-5	4E-8	1E-4	1E-3
78	Platinum-191	D, all compounds	4E+3	83	4E-6	1E-8	5E-5	5E-4
78	Platinum-193m	D, all compounds	3E+3	63	3E-6	8E-9	-	-
			LLI wall (3E+4)	-	-	-	4E-6	4E-4
78	Platinum-193	D, all compounds	4E+4	24	1E-5	3E-8	-	-
			LLI wall (5E+4)	-	-	-	6E-4	6E-3
78	Platinum-195m	D, all compounds	2E+3	4E+3	2E-6	6E-9	-	-

120.296: continued

			Table I Occupational Values			Table II Effluent Concentrations		Table III Releases to Sewers
			Col. 1	Col. 2	Col. 3	Col. 1	Col. 2	
			oral Ingestion	Inhalation				Monthly Average
Atomic No.	Radionuclide	Class	ALI (µCi)	ALI (µCi)	DAC (µCi/ml)	Air (µCi/ml)	Water (µCi/ml)	Concen-tration (µCi/ml)
			LLI wall (2E+3)	-	-	-	3E-5	3E-4
78	Platinum-197m[2]	D, all compounds	2E+4	4E+4	2E-5	6E-8	2E-4	2E-3
78	Platinum-197	D, all compounds	3E+3	1E+4	1E-8	4E-5	4E-4	
78	Platinum-199[2]	D, all compounds	5E+4	1E+5	6E-5	2E-7	7E-4	7E-3
78	Platinum-200	D, all compounds	1E+3	3E+3	1E-6	5E-9	2E-5	24
79	Gold-193	D, all compounds except those given for W and Y	9E+3	3E+4	1E-5	4E-8	1E-4	1E-3
		W, halides and nitrates	-	2E+4	9E-6	3E-8	-	-
		Y, oxides and hydroxides	-	2E+4	8E-6	3E-8	-	-
79	Gold-194	D, see ^{193}Au	3E+3	8E+3	3E-6	1E-8	4E-5	4E-4
		W, see ^{193}Au	-	5E+3	2E-6	8E-9	-	-
		Y, see ^{193}Au	-	5E+3	2E-6	7E-9	-	-
79	Gold-195	D, see ^{193}Au	5E+3	1E+4	5E-6	2E-8	7E-5	7E-4
		W, see ^{193}Au	-	1E+3	6E-7	2E-9	-	-
		Y, see ^{193}Au	-	4E+2	2E-7	6E-10	-	-
79	Gold-198m	D, see ^{193}Au	1E+3	3E+3	1E-6	4E-9	1E-5	1E-4
		W, see ^{193}Au	-	1E+3	5E-7	2E-9	-	-
		Y, see ^{193}Au	-	1E+3	5E-7	2E-9	-	-
79	Gold-198	D, see ^{193}Au	1E+3	4E+3	2E-6	5E-9	2E-5	2E-4
		W, see ^{193}Au	-	2E+3	8E-7	3E-9	-	-
		Y, see ^{193}Au	-	2E+3	7E-7	2E-9	-	-
79	Gold-199	D, see ^{193}Au	3E+3	9E+3	4E-6	1E-8	-	-
			LLI wall (3E+3)	-	-	-	4E-6	4E-4
		W, see ^{193}Au	-	4E+3	2E-6	6E-9	-	-
		Y, see ^{193}Au	-	4E+3	2E-6	5E-9	-	-
79	Gold-200m	D, see ^{193}Au	1E+3	4E+3	1E-6	5E-9	2E-5	2E-4
		W, see ^{193}Au	-	3E+3	1E-6	4E-9	-	-
		Y, see ^{193}Au	-	2E+4	1E-6	3E-9	-	-
79	Gold-200[2]	D, see ^{193}Au	3E+4	6E+4	3E-5	9E-8	4E-4	4E-3
		W, see ^{193}Au	-	8E+4	3E-5	1E-7	-	-
		Y, see ^{193}Au	-	7E+4	3E-5	1E-7	-	-
79	Gold-201[2]	D, see ^{193}Au	7E+4	2E+5	9E-5	3E-7	-	-

120.296: continued

			Table I Occupational Values			Table II Effluent Concentrations		Table III Releases to Sewers
			Col. 1	Col. 2	Col. 3	Col. 1	Col. 2	
			oral Ingestion	Inhalation				Monthly Average
Atomic No.	Radionuclide	Class	ALI (µCi)	ALI (µCi)	DAC (µCi/ml)	Air (µCi/ml)	Water (µCi/ml)	Concen-tration (µCi/ml)
			St wall (9E+4)	-	-	-	1E-3	1E-2
		W, see ^{193}Au	-	2E+5	1E-4	3E-7	-	-
		Y, see ^{193}Au	-	2E+5	9E-5	3E-7	-	-
80	Mercury-193m	Vapor	-	8E+3	4E-6	1E-8	-	-
		Organic D	4E+3	1E+4	5E-6	2E-8	6E-5	6E-4
		D, sulfates	3E+3	9E+3	4E-6	1E-8	4E-5	4E-4
		W, oxides, hydroxides, halides, nitrates, and sulfides	-	8E+3	3E-6	1E-8	-	-
80	Mercury-193	Vapor	-	3E+4	1E-5	4E-8	-	-
		Organic D	2E+4	6E+4	3E-5	9E-8	3E-4	3E-3
		D, see ^{193m}Hg	2E+4	4E+4	2E-5	6E-8	2E-4	2E-3
		W, see ^{193m}Hg	-	4E+4	2E-5	6E-8	-	-
80	Mercury-194	Vapor	-	3E+1	1E-8	4E-11	-	-
		Organic D	2E+1	3E+1	1E-8	4E-11	2E-7	2E-6
		D, see ^{193m}Hg	8E+2	4E+1	2E-8	6E-11	1E-5	1E-4
		W, see ^{193m}Hg	-	1E+2	5E-8	2E-10	-	-
80	Mercury-195m	Vapor	-	4E+3	2E-6	3E-9	-	-
		Organic D	3E+3	6E+3	3E-6	8E-9	4E-5	4E-4
		D, see ^{193m}Hg	2E+3	5E+3	2E-6	7E-9	3E-5	3E-4
		W, see ^{193m}Hg	-	4E+3	2E-6	5E-9	-	-
80	Mercury-195	Vapor	-	3E+4	1E-5	4E-8	-	-
		Organic D	2E+4	5E+4	2E-5	6E-8	2E-4	2E-3
		D, see ^{193m}Hg	1E+4	4E+4	1E-5	5E-8	2E-4	2E-3
		W, see ^{193m}Hg	-	3E+4	1E-5	5E-8	-	-
80	Mercury-197m	Vapor	-	5E+3	2E-6	7E-9	-	-
		Organic D	4E+3	9E+3	4E-6	1E-8	5E-5	5E-4
		D, see ^{193m}Hg	3E+3	7E+3	3E-6	1E-8	4E-5	4E-4
		W, see ^{193m}Hg	-	5E+3	2E-6	7E-9	-	-
80	Mercury-197	Vapor	-	8E+3	4E-6	1E-8	-	-
		Organic D	7E+3	1E+4	6E-6	2E-8	9E-5	9E-4
		D, see ^{193m}Hg	6E+3	1E+4	5E-6	2E-8	8E-5	8E-4
		W, see ^{193m}Hg	-	9E+3	4E-6	1E-8	-	-

120.296: continued

			Table I Occupational Values			Table II Effluent Concentrations		Table III Releases to Sewers
			Col. 1	Col. 2	Col. 3	Col. 1	Col. 2	
			oral Ingestion	Inhalation				Monthly Average
Atomic No.	Radionuclide	Class	ALI (µCi)	ALI (µCi)	DAC (µCi/ml)	Air (µCi/ml)	Water (µCi/ml)	Concen-tration (µCi/ml)
80	Mercury-199m[2]	Vapor	-	8E+4	3E-5	1E-7	-	-
		Organic D	6E+4	2E+5	7E-5	2E-7	-	-
			St wall (1E+5)	-	-	-	1E-3	1E-2
		D, see ^{193m}Hg	6E+4	1E+5	6E-5	2E-8	8E-4	8E-3
		W, see ^{193m}Hg	-	2E+5	7E-5	2E-7	-	-
80	Mercury-203	Vapor	-	8E+2	4E-7	1E-9	-	-
		Organic D	5E+2	8E+2	3E-7	1E-9	7E-6	7E-5
		D, see ^{193m}Hg	2E+3	1E+3	5E-7	2E-9	3E-5	3E-4
		W, see ^{193m}Hg	-	1E+3	5E-7	2E-9	-	-
81	Thallium-194m[2]	D, all compounds	6E+4	2E+5	6E-5	2E-7	-	-
			(St wall 7E+4)	-	-	-	1E-3	1E-2
81	Thallium-194[2]	D, all compounds	3E+5	6E+5	2E-4	8E-7	-	-
			St wall (3E+5)	-	-	-	4E-5	4E-2
81	Thallium-195[2]	D, all compounds	6E+4	1E+5	5E-5	2E-7	9E-4	9E-3
81	Thallium-197	D, all compounds	7E+4	1E+5	5E-5	2E-7	1E-3	1E-2
81	Thallium-198m[2]	D, all compounds	3E+4	5E+4	2E-5	8E-8	4E-4	4E-3
81	Thallium-198	D, all compounds	2E+4	3E+4	1E-5	5E-8	3E-4	3E-3
81	Thallium-199	D, all compounds	6E+4	8E+4	4E-5	1E-7	9E-4	9E-3
81	Thallium-200	D, all compounds	8E+3	1E+4	5E-6	2E-8	1E-4	1E-2
81	Thallium-201	D, all compounds	2E+4	2E+4	9E-6	3E-8	2E-4	2E-3
81	Thallium-202	D, all compounds	4E+3	5E+3	2E-6	7E-9	5E-5	5E-4
81	Thallium-204	D, all compounds	2E+3	2E+3	9E-7	3E-9	2E-5	2E-4
82	Lead-195m[2]	D, all compounds	6E+4	2E+5	8E-5	3E-7	8E-4	8E-3
82	Lead-198	D, all compounds	3E+4	6E+4	3E-5	9E-8	4E-4	4E-3
82	Lead-199[2]	D, all compounds	2E+4	7E+4	3E-5	1E-7	3E-4	3E-3
82	Lead-200	D, all compounds	3E+3	6E+3	3E-6	9E-9	4E-5	4E-4
82	Lead-201	D, all compounds	7E+3	2E+4	86	38	14	13
82	Lead-202m	D, all compounds	9E+3	3E+4	1E-5	4E-8	1E-4	1E-3
82	Lead-202	D, all compounds	1E+2	5E+1	2E-8	7E-11	2E-6	2E-5
82	Lead-203	D, all compounds	5E+3	9E+3	4E-6	1E-8	7E-5	7E-4
82	Lead-205	D, all compounds	4E+3	1E+3	6E-7	2E-9	5E-5	5E-4

120.296: continued

			Table I Occupational Values			Table II Effluent Concentrations		Table III Releases to Sewers
			Col. 1	Col. 2	Col. 3	Col. 1	Col. 2	
			oral Ingestion	Inhalation				Monthly Average
Atomic No.	Radionuclide	Class	ALI (µCi)	ALI (µCi)	DAC (µCi/ml)	Air (µCi/ml)	Water (µCi/ml)	Concen-tration (µCi/ml)
82	Lead-209	D, all compounds	2E+4	6E+4	2E-5	8E-8	3E-4	3E-3
82	Lead-210	D, all compounds	6E+1	2E+1	1E-10	-	-	-
			Bone surf (1E+0)	Bone surf (4E-1)	-	6E-13	1E-8	1E-7
82	Lead-211[2]	D, all compounds	1E+4	5E+2	3E-7	9E-10	2E-4	2E-3
82	Lead-212	D, all compounds	8E+1	3E+1	1E-8	5E-11	-	-
			Bone surf (1E+2)	-	-	-	2E-6	2E-5
82	Lead-214[2]	D, all compounds	9E+3	8E+2	3E-7	1E-9	1E-4	1E-3
83	Bismuth-200[2]	D, nitrates	3E+4	8E+4	4E-5	1E-7	4E-4	4E-3
		W, all other compounds	-	1E+5	4E-5	1E-7	-	-
83	Bismuth-201[2]	D, see ^{200}Bi	1E+4	3E+4	1E-5	4E-8	2E-4	2E-3
		W, see ^{200}Bi	-	4E+4	2E-5	5E-8	-	-
83	Bismuth-202[2]	D, see ^{200}Bi	1E+4	4E+4	2E-5	6E-8	2E-4	2E-3
		W, see ^{200}Bi	-	8E+4	3E-5	1E-7	-	-
83	Bismuth-203	D, see ^{200}Bi	2E+3	7E+3	3E-6	9E-9	3E-5	3E-4
		W, see ^{200}Bi	-	6E+3	36	9E-9	-	-
83	Bismuth-205	D, see ^{200}Bi	1E+3	3E+3	1E-6	3E-9	2E-5	2E-4
		W, see ^{200}Bi	-	1E+3	5E-7	2E-9	-	-
83	Bismuth-206	D, see ^{200}Bi	6E+2	1E+3	6E-7	2E-9	9E-6	9E-5
		W, see ^{200}Bi	-	9E+2	4E-7	1E-9	-	-
83	Bismuth-207	D, see ^{200}Bi	1E+3	2E+3	7E-7	2E-9	1E-5	1E-4
		W, see ^{200}Bi	-	4E+2	1E-7	5E-10	-	-
83	Bismuth-210m	D, see ^{200}Bi	4E+1	5E+0	2E-9	-	-	-
			Kidneys (6E+1)	Kidneys (6E+0)	-	9E-12	8E-7	8E-6
		W, see ^{200}Bi	-	7E+1	3E-10	9E-13	-	-
83	Bismuth-210	D, see ^{200}Bi	8E+2	2E+2	1E-7	-	1E-5	1E-4
			-	Kidneys (4E+2)	-	5E-10	-	-
		W, see ^{200}Bi	-	3E+1	1E-8	4E-11	-	-
83	Bismuth-212[2]	D, see ^{200}Bi	5E+3	2E+2	1E-7	3E-10	7E-5	7E-4
		W, see ^{200}Bi	-	3E+2	1E-7	4E-10	-	-
83	Bismuth-213[2]	D, see ^{200}Bi	7E+3	3E+2	1E-7	4E-10	1E-4	1E-3
		W, see ^{200}Bi	-	4E+2	1E-7	5E-10	-	-

120.296: continued

			Table I Occupational Values			Table II Effluent Concentrations		Table III Releases to Sewers
			Col. 1	Col. 2	Col. 3	Col. 1	Col. 2	
			oral Ingestion	Inhalation				Monthly Average
Atomic No.	Radionuclide	Class	ALI (µCi)	ALI (µCi)	DAC (µCi/ml)	Air (µCi/ml)	Water (µCi/ml)	Concen-tration (µCi/ml)
83	Bismuth-214[2]	D, see ^{200}Bi	2E+4	8E+2	3E-7	1E-9	-	-
			St wall (2E+4)	-	-	-	3E-4	3E-3
		W, see ^{200}Bi	-	9E+2	4E-7	1E-9	-	-
84	Polonium-203[2]	D, all compounds except those given for W	3E+4	6E+4	3E-5	9E-8	3E-4	3E-3
		W, oxides, hydroxides, and nitrates	-	9E+4	4E-5	1E-7	-	-
84	Polonium-205[2]	D, see ^{203}Po	2E+4	4E+4	2E-5	5E-8	3E-4	3E-3
		W, see ^{203}Po	-	7E+4	3E-5	1E-7	-	-
84	Polonium-207	D, see ^{203}Po	8E+3	3E+4	1E-5	3E-8	1E-4	1E-3
		W, see ^{203}Po	-	3E+4	1E-5	4E-8	-	-
84	Polonium-210	D, see ^{203}Po	3E+0	6E+1	3E-10	9E-13	4E-8	4E-7
		W, see ^{203}Po	-	6E+1	3E-10	9E-13	-	-
85	Astatine-207[2]	D, halides	6E+3	3E+3	1E-6	4E-9	8E-5	8E-4
		W	-	2E+3	9E-7	3E-9	-	-
85	Astatine-211	D, halides	1E+2	8E+1	3E-8	1E-10	2E-6	2E-5
		W	-	5E+1	2E-8	8E-11	-	-
86	Radon-220	With daughters removed	-	2E+4	7E-6	2E-8	-	-
		With daughters present	-	2E+1 (or 12 WLM)	9E-9 (or 1.0 WL)	3E-11	-	-
86	Radon-222	With daughters removed	-	1E+4	4E-6	1E-8	-	-
		With daughters present	-	1E+2 (or 4 working level months)	3E-8 (or 0.33 working level)	1E-10	-	-
87	Francium-222[2]	D, all compounds	2E+3	5E+2	2E-7	6E-10	3E-5	3E-4

120.296: continued

			Table I Occupational Values			Table II Effluent Concentrations		Table III Releases to Sewers
			Col. 1	Col. 2	Col. 3	Col. 1	Col. 2	
			oral Ingestion	Inhalation				Monthly Average
Atomic No.	Radionuclide	Class	ALI (µCi)	ALI (µCi)	DAC (µCi/ml)	Air (µCi/ml)	Water (µCi/ml)	Concen-tration (µCi/ml)
87	Francium-223[2]	D, all compounds	6E+2	8E+2	3E-7	1E-9	8E-6	8E-5
88	Radium-223	W, all compounds	5E+0	7E+1	3E-10	9E-13	-	-
			Bone surf (9E+0)	-	-	-	1E-7	1E-6
88	Radium-224	W, all compounds	8E+0	2E+0	7E-10	2E-12	-	-
			Bone surf (2E+1)	-	-	-	2E-7	2E-6
88	Radium-225	W, all compounds	8E+0	7E+1	3E-10	9E-13	-	-
			Bone surf (2E+1)	-	-	-	2E-7	2E-6
88	Radium-226	W, all compounds	2E+0	6E+1	3E-10	9E-13	-	-
			Bone surf (5E+0)	-	-	-	6E-8	6E-7
88	Radium-227[2]	W, all compounds	2E+4	1E+4	6E-6	-	-	-
			Bone surf (2E+4)	Bone surf (2E+4)	-	3E-8	3E-4	3E-3
88	Radium-228	W, all compounds	2E+0	1E+0	5E-10	2E-12	-	-
			Bone surf (4E+0)	-	-	-	6E-8	6E-7
89	Actinium-224	D, all compounds except those given for W and Y	2E+3	3E+1	1E-8	-	-	-
			LLI wall (2E+3)	Bone surf (4E+1)	-	5E-11	3E-5	3E-4
		W, halides and nitrates	-	5E+1	2E-8	7E-11	-	-
		Y, oxides and hydroxides	-	5E+1	2E-8	6E-11	-	-
89	Actinium-225	D, see ^{224}Ac	5E+1	3E+1	1E-10	-	-	-
			LLI wall (5E+1)	Bone surf (5E-1)	-	7E-13	7E-7	7E-6
		W, see ^{224}Ac	-	6E+1	3E-10	9E-13	-	-
		Y, see ^{224}Ac	-	6E+1	3E-10	9E-13	-	-
89	Actinium-226	D, see ^{224}Ac	1E+2	3E+0	1E-9	-	-	-
			LLI wall (1E+2)	Bone surf (4E+0)	-	5E-12	2E-6	2E-5
		W, see ^{224}Ac	-	5E+0	2E-9	7E-12	-	-
		Y, see ^{224}Ac	-	5E+0	2E-9	6E-12	-	-

120.296: continued

			Table I Occupational Values			Table II Effluent Concentrations		Table III Releases to Sewers
			Col. 1	Col. 2	Col. 3	Col. 1	Col. 2	
			oral Ingestion	Inhalation				Monthly Average
Atomic No.	Radionuclide	Class	ALI (µCi)	ALI (µCi)	DAC (µCi/ml)	Air (µCi/ml)	Water (µCi/ml)	Concen-tration (µCi/ml)
89	Actinium-227	D, see ^{224}Ac	2E+1	4E+4	2E-13	-	-	-
			Bone surf (4E-1)	Bone surf (8E-4)	-	1E-15	5E-9	5E-8
		W, see ^{224}Ac	-	2E+3	7E-13	-	-	-
			-	Bone surf (3E-3)	-	4E-15	-	-
		Y, see ^{224}Ac	-	4E+3	2E-12	6E-15	-	-
89	Actinium-228	D, see ^{224}Ac	2E+3	9E+0	4E-9	-	3E-5	3E-4
			-	Bone surf (2E+1)	-	2E-11	-	-
		W, see ^{224}Ac	-	4E+1	2E-8	-	-	-
			-	Bone surf (6E+1)	-	8E-11	-	-
		Y, see ^{224}Ac	-	4E+1	2E-8	6E-11	-	-
90	Thorium-226[2]	W, all compounds except those given for Y	5E+3	2E+2	6E-8	2E-10	-	-
			St wall (5E+3)	-	-	-	7E-5	7E-4
		Y, oxides and hydroxides	-	1 E+	5E-8	2E-10	-	-
90	Thorium-227	W, see ^{226}Th	1E+2	3E+1	1E-10	5E-13	2E-6	2E-5
		Y, see ^{226}Th	-	3E+1	1E-10	5E-13	-	-
90	Thorium-228	W, see ^{226}Th	6E+0	1E+2	4E-12	-	-	-
			Bone surf (1E+1)	Bone surf (2E-2)	-	3E-14	2E-7	2E-6
		Y, see ^{226}Th	-	2E+2	7E-12	2E-14	-	-
90	Thorium-229	W, see ^{226}Th	6E+1	9E+4	4E-13	-	-	-
			Bone surf (1E+0)	Bone surf (2E-3)	-	3E-15	2E-8	2E-7
		Y, see ^{226}Th	-	2E+3	1E-14	-	-	-
			-	Bone surf (3E-3)	-	4E-15	-	-
90	Thorium-230	W, see ^{226}Th	4E+0	6E+3	3E-12	-	-	-
			Bone surf (9E+0)	Bone surf (2E-2)	-	2E-14	1E-7	1E-6
		Y, see ^{226}Th	-	2E+2	6E-12	-	-	-
			-	Bone surf (2E-2)	-	3E-14	-	-

120.296: continued

			Table I Occupational Values			Table II Effluent Concentrations		Table III Releases to Sewers
			Col. 1	Col. 2	Col. 3	Col. 1	Col. 2	
			oral Ingestion	Inhalation				Monthly Average
Atomic No.	Radionuclide	Class	ALI (µCi)	ALI (µCi)	DAC (µCi/ml)	Air (µCi/ml)	Water (µCi/ml)	Concen-tration (µCi/ml)
90	Thorium-231	W, see ^{226}Th	4E+3	6E+3	3E-6	9E-9	5E-5	5E-4
		Y, see ^{226}Th	-	6E+3	3E-6	9E-9	-	-
90	Thorium-232	W, see ^{226}Th	7E+1	1E+3	5E-13	-	-	-
			Bone surf (2E+0)	Bone surf (3E-3)	-	4E-15	3E-8	3E-7
		Y, see ^{226}Th	-	3E+3	1E-12	-	-	-
			-	Bone surf (4E-3)	-	6E-15	-	-
90	Thorium-234	W, see ^{226}Th	3E+2	2E+2	8E-8	3E-10	-	-
			LLI wall (4E+2)	-	-	-	5E-6	5E-5
		Y, see ^{226}Th	-	2E+2	6E-8	2E-10	-	-
91	Protactinium-227[2]	W, all compounds except those given for Y	4E+3	1E+2	5E-8	2E-10	5E-5	5E-4
		Y, oxides and hydroxides	-	1E+2	4E-8	1E-10	-	-
91	Protactinium-228	W, see ^{227}Pa	1E+3	1E+1	5E-9	-	2E-5	2E-4
			-	Bone surf (2E+1)	-	3E-11	-	-
		Y, see ^{227}Pa	-	1E+1	5E-9	2E-11	-	-
91	Protactinium-230	W, see ^{227}Pa	6E+2	5E+0	2E-9	7E-12	-	-
			Bone surf (9E+2)	-	-	-	1E-5	1E-4
		Y, see ^{227}Pa	-	4E+0	1E-9	5E-12	-	-
91	Protactinium-231	W, see ^{227}Pa	2E+1	2E+3	E- 613	-	-	-
			Bone surf (5E-1)	Bone surf (4E-3)	-	6E-15	6E-9	6E-8
		Y, see ^{227}Pa	-	4E+3	E- 212	-	-	-
			-	Bone surf (6E-3)	-	8E-15	-	-
91	Protactinium-232	W, see ^{227}Pa	E+ 13	2E+1	E- 99	-	2E-5	2E-4
			-	Bone surf (6E+1)	-	8E-11	-	-
		Y, see ^{227}Pa	-	E+ 61	E- 28	-	-	-
			-	Bone surf (7E+1)	-	1E-10	-	-
91	Protactinium-233	W, see ^{227}Pa	1E+3	7E+2	E- 37	1E-9	-	-

120.296: continued

Atomic No.	Radionuclide	Class	Table I Occupational Values Col. 1 oral Ingestion ALI (µCi)	Table I Occupational Values Col. 2 Inhalation ALI (µCi)	Table I Occupational Values Col. 3 Inhalation DAC (µCi/ml)	Table II Effluent Concentrations Col. 1 Air (µCi/ml)	Table II Effluent Concentrations Col. 2 Water (µCi/ml)	Table III Releases to Sewers Monthly Average Concen-tration (µCi/ml)
			LLI wall (2E+3)	-	-	-	2E-5	2E-4
		Y, see ^{227}Pa	-	6E+2	2E-7	8E-10	-	-
91	Protactinium-234	W, see ^{227}Pa	2E+3	8E+3	E- 36	1E-8	3E-5	3E-4
		Y, see ^{227}Pa	-	7E+3	E- 36	E- 99	-	-
92	Uranium-230	D, UF_6, UO_2F_2, $UO_2(NO_3)_2$	4E+0	4E+1	2E-10	-	-	-
			Bone surf (6E+0)	Bone surf (6E-1)	-	8E-13	8E-8	8E-7
		W, UO_3, UF_4, UCl_4	-	4E+1	1E-0	5E-13	-	-
		Y, UO_2, U_3O_8	-	3E+1	1E-10	4E-13	-	-
92	Uranium-231	D, see ^{230}U	5E+3	8E+3	3E-6	1E-8	-	-
			LLI wall (4E+3)	-	-	-	6E-5	6E-4
		W, see ^{230}U	-	E+ 63	2E-6	8E-9	-	-
		Y, see ^{230}U	-	5E+3	2E-6	6E-9	-	-
92	Uranium-232	D, see ^{230}U	2E+0	2E+1	9E-11	-	-	-
			Bone surf (4E+0)	Bone surf (4E-1)	-	6E-13	6E-8	6E-7
		W, see ^{230}U	-	4E+1	2E-10	5E-13	-	-
		Y, see ^{230}U	-	8E+3	3E-12	1E-14	-	-
92	Uranium-233	D, see ^{230}U	1E+1	1E+0	5E-10	-	-	-
			Bone surf (2E+1)	Bone surf (2E+0)	-	3E-12	3E-7	3E-6
		W, see ^{230}U	-	7E+1	3E-10	1E-12	-	-
		Y, see ^{230}U	-	E+ 42	2E-11	5E-14	-	-
92	Uranium-234[3]	D, see ^{230}U	1E+1	1E+0	5E-10	-	-	-
			Bone surf (2E+1)	Bone surf (2E+0)	-	3E-12	3E-7	3E-6
		W, see ^{230}U	-	7E+1	3E-10	1E-12	-	-
		Y, see ^{230}U	-	4E+2	2E-11	5E-14	-	-
92	Uranium-235[3]	D, see ^{230}U	1E+1	1E+0	6E-10	-	-	-
			Bone surf (2E+1)	Bone surf (2E+0)	-	3E-12	3E-7	3E-6
		W, see ^{230}U	-	8E+1	3E-10	1E-12	-	-
		Y, see ^{230}U	-	4E+2	2E-11	6E-14	-	-

120.296: continued

			Table I Occupational Values			Table II Effluent Concentrations		Table III Releases to Sewers
			Col. 1	Col. 2	Col. 3	Col. 1	Col. 2	
			oral Ingestion	Inhalation				Monthly Average
Atomic No.	Radionuclide	Class	ALI (µCi)	ALI (µCi)	DAC (µCi/ml)	Air (µCi/ml)	Water (µCi/ml)	Concen-tration (µCi/ml)
92	Uranium-236	D, see ^{230}U	1E+1	1E+0	5E-10	-	-	-
			Bone surf (2E+1)	Bone surf (2E+0)	-	3E-12	3E-7	3E-6
		W, see ^{230}U	-	E+ 81	3E-10	1E-12	-	-
		Y, see ^{230}U	-	4E+2	2E-11	6E-14	-	-
92	Uranium-237	D, see ^{230}U	2E+3	3E+3	1E-6	4E-9	-	-
			LLI wall (2E+3)	-	-	-	3E-5	3E-4
		W, see ^{230}U	-	2E+3	7E-7	2E-9	-	-
		Y, see ^{230}U	-	2E+3	E- 67	2E-9	-	-
92	Uranium-238[3]	D, see ^{230}U	1E+1	1E+0	6E-10	-	-	-
			Bone surf (2E+1)	Bone surf (2E+0)	-	3E-12	3E-7	3E-6
		W, see ^{230}U	-	8E+1	3E-10	1E-12	-	-
		Y, see ^{230}U	-	4E+1	2E-11	6E-14	-	-
92	Uranium-239[2]	D, see ^{230}U	7E+4	2E+5	8E-5	3E-7	9E-4	9E-3
		W, see ^{230}U	-	2E+5	7E-5	2E-7	-	-
		Y, see ^{230}U	-	2E+5	6E-5	2E-7	-	-
92	Uranium-240	D, see ^{230}U	1E+3	4E+3	2E-6	5E-9	2E-5	2E-4
		W, see ^{230}U	-	3E+3	1E-6	4E-9	-	-
		Y, see ^{230}U	-	2E+3	1E-6	3E-9	-	-
92	Uranium-natural[3]	D, see ^{230}U	1E+1	1E+0	5E-10	-	-	-
			Bone surf (2E+1)	Bone surf (2E+0)	-	3E-12	3E-7	3E-6
		W, see ^{230}U	-	8E+1	3E-10	9E-13	-	-
		Y, see ^{230}U	-	5E+2	2E-11	9E-14	-	-
93	Neptunium-232[2]	W, all compounds	1E+5	2E+3	7E-7	2E-3	2E-2	
			-	Bone surf (5E+2)	-	6E-9	-	-
93	Neptunium-233[2]	W, all compounds	8E+5	3E+6	1E-2	4E-6	1E-2	4E-4
93	Neptunium-234	W, all compounds	2E+3	3E+3	1E-6	E- 49	3E-5	3E-4
93	Neptunium-235	W, all compounds	2E+4	8E+2	3E-7	-	-	-
			LLI wall (2E+4)	Bone surf (1E+3)	-	2E-9	3E-4	3E-3
93	Neptunium-236	W, all compounds	3E+0	2E+2	9E-12	-	-	-

120.296: continued

			Table I Occupational Values			Table II Effluent Concentrations		Table III Releases to Sewers
			Col. 1	Col. 2	Col. 3	Col. 1	Col. 2	
			oral Ingestion	Inhalation				Monthly Average
Atomic No.	Radionuclide	Class	ALI (µCi)	ALI (µCi)	DAC (µCi/ml)	Air (µCi/ml)	Water (µCi/ml)	Concen-tration (µCi/ml)
	(1.15E+5 y)		Bone surf (6E+0)	Bone surf (5E-2)	-	8E-14	9E-8	9E-7
93	Neptunium-236	W, all compounds	3E+3	E+ 31	1E-8	-	-	-
	(22.5 h)		Bone surf (4E+3)	Bone surf (7E+1)	-	1E-10	55 E-	5E-4
93	Neptunium-237	W, all compounds	5E+1	4E+3	2E-12	-	-	-
			Bone surf (1E+0)	Bone surf (1E-2)	-	1E-4	28 E-	2E-7
93	Neptunium-238	W, all compounds	1E+3	6E+1	3E-8	2E-5	2E-4	
			-	Bone surf (2E+2)	-	2E-10	-	-
93	Neptunium-239	W, all compounds	E+ 23	2E+3	9E-7	3E-9	-	-
			LLI wall (2E+3)	-	-	-	2E-5	2E-4
93	Neptunium-240[2]	W, all compounds	2E+4	8E+4	3E-5	1E-7	3E-4	3E-3
94	Plutonium-234	W, all compounds except PuO_2	8E+3	2E+2	9E-8	3E-10	1E-4	1E-3
		Y, PuO_2	-	2E+2	8E-8	3E-10	-	-
94	Plutonium-235[2]	W, see ^{234}Pu	9E+5	3E+6	1E-3	4E-6	1E-2	1E-1
		Y, see ^{234}Pu	-	36	1E-3	3E-6	-	-
94	Plutonium-236	W, see ^{234}Pu	2E+0	2E+2	8E-12	-	-	-
			Bone surf (4E+0)	Bone surf (4E-2)	-	5E-14	6E-8	6E-7
		Y, see ^{234}Pu	-	4E+2	2E-11	6E-14	-	-
94	Plutonium-237	W, see ^{234}Pu	1E+4	3E+3	1E-6	5E-9	2E-4	2E-3
		Y, see ^{234}Pu	-	3E+3	1E-6	4E-9	-	-
94	Plutonium-238	W, see ^{234}Pu	9E+1	7E+3	3E-12	-	-	-
			Bone surf (2E+0)	Bone surf (1E-2)	-	2E-14	2E-8	2E-7
		Y, see ^{234}Pu	-	2E+2	8E-12	2E-14	-	-
94	Plutonium-239	W, see ^{234}Pu	8E+1	6E+3	3E-12	-	-	-
			Bone surf (1E+0)	Bone surf (1E-2)	-	2E-14	2E-8	2E-7
		Y, see ^{234}Pu	-	2E+2	7E-12	-	-	-
			-	Bone surf (2E-2)	-	2E-14	-	-
94	Plutonium-240	W, see ^{234}Pu	8E+1	6E+3	3E-12	-	-	-
			Bone surf (1E+0)	Bone surf (1E-2)	-	2E-14	2E-8	2E-7

120.296: continued

			Table I Occupational Values			Table II Effluent Concentrations		Table III Releases to Sewers
			Col. 1	Col. 2	Col. 3	Col. 1	Col. 2	
			oral Ingestion	Inhalation				Monthly Average
Atomic No.	Radionuclide	Class	ALI (µCi)	ALI (µCi)	DAC (µCi/ml)	Air (µCi/ml)	Water (µCi/ml)	Concen-tration (µCi/ml)
		Y, see ^{234}Pu	-	2E+2	7E-12	-	-	-
			-	Bone surf (2E-2)	-	2E-14	-	-
94	Plutonium-241	W, see ^{234}Pu	E+ 41	3E+1	1E-10	-	-	-
			Bone surf (7E+1)	Bone surf (6E-1)	-	8E-13	1E-6	1E-5
		Y, see ^{234}Pu	-	8E+1	3E-10	-	-	-
			-	Bone surf (1E+0)	-	1E-12	-	-
94	Plutonium-242	W, see ^{234}Pu	8E+1	E+ 73	3E-12	-	-	-
			Bone surf (1E+0)	Bone surf (1E-2)	-	2E-14	2E-8	2E-7
		Y, see ^{234}Pu	-	2E+2	7E-12	-	-	-
			-	Bone surf (2E-2)	-	2E-14	-	-
94	Plutonium-243	W, see ^{234}Pu	2E+4	4E+4	2E-5	5E-8	2E-4	2E-3
		Y, see ^{234}Pu	-	4E+4	2E-5	5E-8	-	-
94	Plutonium-244	W, see ^{234}Pu	E+ 81	7E+3	3E-12	-	-	-
			Bone surf (2E+0)	Bone surf (1E-2)	-	2E-14	2E-8	2E-7
		Y, see ^{234}Pu	-	2E+2	7E-12	-	-	-
			-	Bone surf (2E-2)	-	2E-14	-	-
94	Plutonium-245	W, see ^{234}Pu	2E+3	5E+3	2E-6	6E-9	3E-5	3E-4
		Y, see ^{234}Pu	-	4E+3	2E-6	6E-9	-	-
94	Plutonium-246	W, see ^{234}Pu	4E+2	3E+2	1E-7	4E-10	-	-
			LLI wall (4E+2)	-	-	-	6E-6	6E-5
		Y, see ^{234}Pu	-	3E+2	1E-7	4E-10	-	-
95	Americium-237[2]	W, all compounds	8E+4	3E+5	1E-4	4E-7	1E-3	
95	Americium-238[2]	W, all compounds	4E+4	3E+3	1E-6	-	5E-4	5E-3
			-	Bone surf (6E+3)	-	9E-9	-	-
95	Americium-239	W, all compounds	5E+3	1E+4	E- 56	2E-8	7E-5	7E-4
95	Americium-240	W, all compounds	2E+3	3E+3	1E-6	4E-9	3E-5	3E-4
95	Americium-241	W, all compounds	8E+1	6E+5	3E-12	-	-	-
			Bone surf (1E+0)	Bone surf (1E-2)	-	2E-14	2E-8	2E-7

120.296: continued

			Table I Occupational Values			Table II Effluent Concentrations		Table III Releases to Sewers
			Col. 1	Col. 2	Col. 3	Col. 1	Col. 2	
			oral Ingestion	Inhalation				Monthly Average
Atomic No.	Radionuclide	Class	ALI (µCi)	ALI (µCi)	DAC (µCi/ml)	Air (µCi/ml)	Water (µCi/ml)	Concen-tration (µCi/ml)
95	Americium-242m	W, all compounds	8E+1	6E+3	3E-12	-	-	-
			Bone surf (1E+0)	Bone surf (1E-2)	-	2E-14	2E-8	2E-7
95	Americium-242	W, all compounds	4E+3	8E+1	4E-8	-	5E-5	5E-4
			-	Bone surf (9E+1)	-	1E-10	-	-
95	Americium-243	W, all compounds	E+ 81	6E+3	3E-12	-	-	-
			Bone surf (1E+0)	Bone surf (1E-2)	-	2E-14	2E-8	2E-7
95	Americium-244m[2]	W, all compounds	6E+4	E+ 43	2E-6	-	-	-
			St wall (8E+4)	Bone surf (7E+3)	-	1E-8	1E-3	12 E-
95	Americium-244	W, all compounds	3E+3	2E+2	E- 88	-	4E-5	4E-4
			-	Bone surf (3E+2)	-	4E-10	-	-
95	Americium-245	W, all compounds	3E+4	8E+4	3E-5	1E-7	4E-4	4E-3
95	Americium-246m[2]	W, all compounds	5E+4	2E+5	E- 85	3E-7	-	-
			St wall (6E+4)	-	-	-	8E-4	8E-3
95	Americium-246[2]	W, all compounds	3E+4	1E+5	4E-5	1E-7	4E-4	4E-3
96	Curium-238	W, all compounds	2E+4	1E+3	5E-7	2E-9	2E-4	2E-3
96	Curium-240	W, all compounds	6E+1	6E+1	2E-10	-	-	-
			Bone surf (8E+1)	Bone surf (6E-1)	-	9E-13	1E-6	1E-5
96	Curium-241	W, all compounds	1E+3	3E+1	1E-8	-	2E-5	2E-4
			-	Bone surf (4E+1)	-	5E-11	-	-
96	Curium-242	W, all compounds	3E+1	3E+1	1E-10	-	-	-
			Bone surf (5E+1)	Bone surf (3E-1)	-	4E-13	7E-7	7E-6
96	Curium-243	W, all compounds	1E+0	9E+3	4E-12	-	-	-
			Bone surf (2E+0)	Bone surf (2E-2)	-	2E-14	3E-8	3E-7
96	Curium-244	W, all compounds	1E+0	1E+2	5E-12	-	-	-
			Bone surf (3E+0)	Bone surf (2E-2)	-	3E-14	3E-8	3E-7
96	Curium-245	W, all compounds	7E+1	6E+3	3E-12	-	-	-
			Bone surf (1E+0)	Bone surf (1E-2)	-	2E-14	2E-8	2E-7

120.296: continued

			Table I Occupational Values			Table II Effluent Concentrations		Table III Releases to Sewers
			Col. 1	Col. 2	Col. 3	Col. 1	Col. 2	
			oral Ingestion	Inhalation				Monthly Average
Atomic No.	Radionuclide	Class	ALI (µCi)	ALI (µCi)	DAC (µCi/ml)	Air (µCi/ml)	Water (µCi/ml)	Concen-tration (µCi/ml)
96	Curium-246	W, all compounds	7E+1	6E+3	E- 312	-	-	-
			Bone surf (1E+0)	Bone surf (1E-2)	-	2E-14	2E-8	2E-7
96	Curium-247	W, all compounds	8E+1	6E+3	3E-12	-	-	-
			Bone surf (1E+0)	Bone surf (1E-2)	-	2E-14	2E-8	2E-7
96	Curium-248	W, all compounds	2E+1	2E+3	7E-12	-	-	-
			Bone surf (4E-1)	Bone surf (3E-3)	-	4E-15	5E-9	5E-8
96	Curium-249[2]	W, all compounds	5E+4	2E+4	7E-6	-	7E-4	7E-3
			-	Bone surf (3E+4)	-	4E-8	-	-
96	Curium-250	W, all compounds	4E+2	3E+4	1E-13	-	-	-
			Bone surf (6E-2)	Bone surf (5E-4)	-	8E-16	9E-10	9E-9
97	Berkelium-245	W, all compounds	2E+3	1E+3	E- 68	E- 29	3E-5	3E-4
97	Berkelium-246	W, all compounds	3E+3	3E+3	1E-6	4E-9	4E-5	4E-4
97	Berkelium-247	W, all compounds	5E+1	4E+3	2E-12	-	-	-
			Bone surf (1E+0)	Bone surf (9E-3)	-	1E-14	2E-8	2E-7
97	Berkelium-249	W, all compounds	2E+2	2E+0	7E-10	-	-	-
			Bone surf (5E+2)	Bone surf (4E+0)	-	5E-12	6E-6	6E-5
97	Berkelium-250	W, all compounds	9E+3	3E+2	1E-7	–	1E-4	1E-3
			-	Bone surf (7E+2)	-	1E-9	-	-
98	Californium-244[2]	W, all compounds except those given for Y	3E+4	6E+2	2E-7	8E-10	-	-
			St wall (3E+4)	-	-	-	4E-4	4E-3
		Y, oxides and hydroxides	-	6E+2	2E-7	8E-10	-	-
98	Californium-246	W, see ^{244}Cf	4E+2	9E+0	4E-9	1E-11	5E-6	5E-5
		Y, see ^{244}Cf	-	9E+0	4E-9	1E-11	-	-
98	Californium-248	W, see ^{244}Cf	8E+0	6E+2	3E-11	-	-	-
			Bone surf (2E+1)	Bone surf (1E-1)	-	2E-13	2E-7	2E-6
		Y, see ^{244}Cf	-	1E+1	4E-11	1E-12	-	-
98	Californium-249	W, see ^{244}Cf	5E+1	4E+3	2E-12	-	-	-
			Bone surf (1E+0)	Bone surf (9E-3)	-	1E-14	2E-8	2E-7

120.296: continued

			Table I Occupational Values			Table II Effluent Concentrations		Table III Releases to Sewers
			Col. 1	Col. 2	Col. 3	Col. 1	Col. 2	
			oral Ingestion	Inhalation				Monthly Average
Atomic No.	Radionuclide	Class	ALI (µCi)	ALI (µCi)	DAC (µCi/ml)	Air (µCi/ml)	Water (µCi/ml)	Concen-tration (µCi/ml)
		Y, see ^{244}Cf	-	1E+2	4E-12	-	-	-
			-	Bone surf (1E-2)	-	2E-14	-	-
98	Californium-250	W, see ^{244}Cf	1E+0	9E+3	4E-12	-	-	-
			Bone surf (2E+0)	Bone surf (2E-2)	-	3E-14	3E-8	3E-7
		Y, see ^{244}Cf	-	3E+2	1E-11	4E-14	-	-
98	Californium-251	W, see ^{244}Cf	5E+1	4E+3	2E-12	-	-	-
			Bone surf (1E+0)	Bone surf (9E-3)	-	1E-14	2E-7	
		Y, see ^{244}Cf	-	1E+2	4E-12	-	-	-
			-	Bone surf (1E-2)	-	2E-14	-	-
98	Californium-252	W, see ^{244}Cf	2E+0	2E+2	8E-12	-	-	-
			Bone surf (5E+0)	Bone surf (4E-2)	-	5E-14	7E-8	7E-7
		Y, see ^{244}Cf	-	3E+2	1E-11	5E-14	-	-
98	Californium-253	W, see ^{244}Cf	2E+2	2E+0	8E-10	3E-12	-	-
			Bone surf (4E+2)	-	-	-	5E-6	5E-5
		Y, see ^{244}Cf	-	2E+0	7E-10	2E-12	-	-
98	Californium-254	W, see ^{244}Cf	2E+0	2E+2	9E-12	3E-14	3E-8	3E-7
		Y, see ^{244}Cf	-	2E+2	2E-14		-	-
99	Einsteinium-250	W, all compounds	4E+4	5E+2	2E-7	6E-5	6E-3	
			-	Bone surf (1E+3)	-	2E-9	-	-
99	Einsteinium-251	W, all compounds	7E+3	9E+2	4E-7	-	1E-4	1E-3
			-	Bone surf (1E+3)	-	2E-9	-	-
99	Einsteinium-253	W, all compounds	2E+2	1E+0	6E-10	2E-12	2E-6	2E-5
99	Einsteinium-254m	W, all compounds	3E+2	1E+1	4E-9	1E-11	-	-
			LLI wall (3E+2)	-	-	-	4E-6	4E-5
99	Einsteinium-254	W, all compounds	8E+0	7E+2	2E-11	-	-	-
			Bone surf (2E+1)	Bone surf (1E-1)	-	2E-13	2E-7	2E-6
100	Fermium-252	W, all compounds	5E+2	1E+1	5E-9	2E-11	6E-6	6E-5
100	Fermium-253	W, all compounds	1E+3	1E+1	4E-9	1E-11	1E-5	1E-4

120.296: continued

Atomic No.	Radionuclide	Class	Table I Occupational Values Col. 1 oral Ingestion ALI (µCi)	Col. 2 Inhalation ALI (µCi)	Col. 3 Inhalation DAC (µCi/ml)	Table II Effluent Concentrations Col. 1 Air (µCi/ml)	Col. 2 Water (µCi/ml)	Table III Releases to Sewers Monthly Average Concen-tration (µCi/ml)
100	Fermium-254	W, all compounds	3E+3	9E+1	4E-8	1E-10	4E-5	4E-4
100	Fermium-255	W, all compounds	5E+2	2E+1	9E-9	3E-11	7E-6	7E-5
100	Fermium-257	W, all compounds	2E+1	2E+1	7E-11	-	-	-
			Bone surf (4E+1)	Bone surf (2E-1)	-	3E-13	5E-7	5E-6
101	Mendelevium-257	W, all compounds	7E+3	8E+1	4E-8	-	1E-4	1E-3
			-	Bone surf (9E+1)	-	1E-10	-	-
101	Mendelevium-258	W, all compounds	3E+1	2E+1	1E-10	-	-	-
			Bone surf (5E+1)	Bone surf (3E-1)	-	5E-13	6E-7	6E-6
-	Any single radionuclide not listed above with decay mode other than alpha emission or spontaneous fission and with radioactive half- life less than 2 hours Submersion[1]		-	2E+2	E- 17	1E-9	-	-
-	Any single radionuclide not listed above with decay mode other than alpha emission or spontaneous fis- sion and with radioactive half- life greater than 2 hours		-	2E+1	1E-10	1E-12	1E-8	1E-7
-	Any single radionuclide not listed above that decays by alpha emission or spontaneous fission, or any mixture for which either the identity or the concentration of any radio- nuclide in the mixture is not known		-	4E+4	2E-13	1E-15	2E-9	2E-8

FOOTNOTES:

[1]"Submersion" means that values given are for submersion in a hemispherical semi-infinite cloud of airborne material.

[2]These radionuclides have radiological half-lives of less than 2 hours. The total effective dose equivalent received during operations with these radionuclides might include a significant contribution from external exposure. The DAC values for all radionuclides, other than those designated Class "Submersion," are based upon the committed effective dose equivalent due to the intake of the radionuclide into the body and do NOT include potentially significant contributions to dose equivalent from external exposures. The licensee may substitute 1E-7 µCi/ml for the listed DAC to account for the submersion dose prospectively, but should use individual monitoring devices or other radiation measuring instruments that measure external exposure to demonstrate compliance with the limits (see 105 CMR 120.213).

[3]For soluble mixtures of U-238, U-234, and U-235 in air, chemical toxicity may be the limiting factor (see 105 CMR 120.211(E)). If the percent by weight (enrichment) of U-235 is not greater than 5, the concentration value for a 40-hour workweek is 0.2 milligrams uranium per cubic meter of air average. For any enrichment, the product of the average concentration and time of exposure during a 40-hour workweek shall not exceed 8E-3 (SA) µCi-hr/ml, where SA is the specific activity of the uranium inhaled. The specific activity for natural uranium is 6.77E-7 curies per gram U. The specific activity for other mixtures of U-238, U-235, and U-234, if not known, shall be:

SA = 3.6E-7 curies/gram U U-depleted

$SA = [0.4 + .38\ (\text{enrichment}) + 0.0034\ (\text{enrichment})^2]\ E\text{-}6$, enrichment $\geq$ 0.72

120.296: continued

where enrichment is the percentage by weight of U-235, expressed as percent.

NOTE:

1. If the identity of each radionuclide in a mixture is known but the concentration of one or more of the radionuclides in the mixture is not known, the DAC for the mixture shall be the most restrictive DAC of any radionuclide in the mixture.

2. If the identity of each radionuclide in the mixture is not known, but it is known that certain radionuclides specified in this appendix are not present in the mixture, the inhalation ALI, DAC, and effluent and sewage concentrations for the mixture are the lowest values specified in this appendix for any radionuclide that is not known to be absent from the mixture; or

120.296: continued

	Table I Occupational Values			Table II Effluent Concentrations		Table III Releases to Sewers
	Col.1	Col. 2	Col. 3	Col.1	Col. 2	
	Oral Ingestion	Inhalation				Monthly Average
	ALI (µCi)	ALI (µCi)	DAC (µCi/ml)	Air (µCi/ml)	Water (µCi/ml)	Concentration (µCi/ml)
If it is known that Ac-227-D and Cm-250-W are not present	-	0	3.00 e-13	-	-	-
If, in addition, it is known that Ac-227-W,Y, Th-229-W,Y, Th-230-W, Th-232-W,Y, Pa-231-W,Y, Np-237-W, Pu-239-W, Pu-240-W, Pu-242-W, Am-241-W, Am-242m-W, Am-243-W, Cm-245-W, Cm-246-W, Cm-247-W, Cm-248-W, Bk-247-W, Cf-249-W, and Cf-251-W are not present	-	0.007	3.00 e-12	-	-	-
If, in addition, it is known that Sm-146-W, Sm-147-W, Gd-148-D,W, Gd-152-D,W, Th-228-W,Y, Th-230-Y, U-232-Y, U-233-Y, U-234-Y, U-235-Y, U-236-Y, U-238-Y, Np-236-W, Pu-236-W,Y, Pu-238-W,Y, Pu-239-Y, Pu-240-Y, Pu-242-Y, Pu-244-W,Y, Cm-243-W, Cm-244-W, Cf-248-W, Cf-249-Y, Cf-250-W,Y, Cf-251-Y, Cf-252-W,Y, and Cf-254-W,Y are not present	-	0.07	3.00 e-11	-	-	-
Bi-210m-W, Po-210-D,W, Ra-223-W, Ra-225-W, Ra-226-W, Ac-225-D,W,Y, Th-227-W,Y, U-230-D,W,Y, U-232-D,W, Pu-241-W, Cm-240-W, Cm-242-W, Cf-248-Y, Es-254-W, Fm-257-W, and Md-258-W are not present	-	0.7	3.00 e-10	-	-	-
If, in addition, it is known that Si-32-Y, Ti-44-Y, Fe-60-D, Sr-90-Y, Zr-93-D, Cd-113m-D, Cd-113-D, In-115-D,W, La-138-D, Lu-176-W, Hf-178m-D,W, Hf-182-D,W, Bi-210m-D, Ra-224-W, Ra-228-W, Ac-226-D,W,Y, Pa-230-W,Y, U-233-D,W, U-234-D,W, U-235-D,W, U-236-D,W, U-238-D,W, Pu-241-Y, Bk-249-W, Cf-253-W,Y, and Es-253-W are not present	-	7	3.00 e-09	-	-	-
If it is known that Ac-227-D,W,Y, Th-229-W,Y, Th-232-W,Y, Pa-231-W,Y, Cm-248-W, and Cm-250-W are not present	-	-	-	1.00 e-14	-	-
If, in addition, it is known that Sm-146-W, Gd-148-D,W, Gd-152-D, Th-228-W,Y, Th-230-W,Y, U-232-Y, U-233-Y, U-234-Y, U-235-Y, U-236-Y, U-238-Y, U-Nat-Y, Np-236-W, Np-237-W, Pu-236-W,Y, Pu-238-W,Y, Pu-239-W,Y, Pu-240-W,Y, Pu-242-W,Y, Pu-244-W,Y, Am-241-W, Am-242m-W, Am-243-W, Cm-243-W, Cm-244-W, Cm-245-W, Cm-246-W, Cm-247-W, Bk-247-W, Cf-249-W,Y, Cf-250-W,Y, Cf-251-W,Y, Cf-252-W,Y, and Cf-254-W,Y are not present	-	-	-	1.00 e-13	-	-
If, in addition, it is known that Sm-147-W, Gd-152-W, Pb-210-D, Bi-210m-W, Po-210-D,W, Ra-223-W, Ra-225-W, Ra-226-W, Ac-225-D,W,Y, Th-227-W,Y, U-230-D,W,Y, U-232-D,W, U-Nat-W, Pu-241-W, Cm-240-W, Cm-242-W, Cf-248-W,Y, Es-254-W, Fm-257-W, and Md-258-W are not present	-	-	-	1.00 e-12	-	-
If, in addition it is known that Fe-60, Sr-90, Cd-113m, Cd-113, In-115, I-129, Cs-134, Sm-145, Sm-147, Gd-148, Gd-152, Hg-194 (organic), Bi-210m, Ra-223, Ra-224, Ra-225, Ac-225, Th-228, Th-230, U-233, U-234, U-235, U-236, U-238, U-Nat, Cm-242, Cf-248, Es-254, Fm-257, and Md-258 are not present	-	-	-	-	0	0.0001

3. If a mixture of radionuclides consists of uranium and its daughters in ore dust (10 µm AMAD particle distribution assumed) prior to chemical separation of the uranium from the ore, the

120.296: continued

following values may be used for the DAC of the mixture: 6E-11 μCi of gross alpha activity from uranium-238, uranium-234, thorium-230, and radium-226 per milliliter of air; 3E-11 μCi of natural uranium per milliliter of air; or 45 micrograms of natural uranium per cubic meter of air.

4. If the identity and concentration of each radionuclide in a mixture are known, the limiting values should be derived as follows: determine, for each radionuclide in the mixture, the ratio between the concentration present in the mixture and the concentration otherwise established in 105 CMR 120.296: Appendix B for the specific radionuclide when not in a mixture. The sum of such ratios for all of the radionuclides in the mixture may not exceed "1" (i.e., "unity").

120.296: continued

Example: If radionuclides "A," "B," and "C" are present in concentrations CA, CB, and CC, and if the applicable DACs are DAC_A, DAC_B, and DAC_C, respectively, then the concentrations shall be limited so that the following relationship exists:

$$\frac{C_A}{DAC_A} + \frac{C_B}{DAC_B} + \frac{C_C}{DAC_C} \leq 1$$

120.297: Appendix C -- Quantities[1] of Licensed Material Requiring Labeling

Radionuclide	Quantity (μCi)	Radionuclide	Quantity (μCi)
Hydrogen-3	1,000	Cobalt-61	1,000
Beryllium-7	1,000	Cobalt-62m	1,000
Beryllium-10	1	Nickel-56	100
Carbon-11	1,000	Nickel-57	100
Carbon-14	100	Nickel-59	100
Fluorine-18	1,000	Nickel-63	100
Sodium-22	10	Nickel-65	1,000
Sodium-24	100	Nickel-66	10
Magnesium-28	100	Copper-60	1,000
Aluminum-26	10	Copper-61	1,000
Silicon-31	1,000	Copper-64	1,000
Silicon-32	1	Copper-67	1,000
Phosphorus-32	10	Zinc-62	100
Phosphorus-33	100	Zinc-63	1,000
Sulfur-35	100	Zinc-65	10
Chlorine-36	10	Zinc-69m	100
Chlorine-38	1,000	Zinc-69	1,000
Chlorine-39	1,000	Zinc-71m	1,000
Argon-39	1,000	Zinc-72	100
Argon-41	1,000	Gallium-65	1,000
Potassium-40	100	Gallium-66	100
Potassium-42	1,000	Gallium-67	1,000
Potassium-43	1,000	Gallium-68	1,000
Potassium-44	1,000	Gallium-70	1,000
Potassium-45	1,000	Gallium-72	100
Calcium-41	100	Gallium-73	1,000
Calcium-45	100	Germanium-66	1,000
Calcium-47	100	Germanium-67	1,000
Scandium-43	1,000	Germanium-68	10
Scandium-44m	100	Germanium-69	1,000
Scandium-44	100	Germanium-71	1,000
Scandium-46	10	Germanium-75	1,000
Scandium-47	100	Germanium-77	1,000
Scandium-48	100	Germanium-78	1,000
Scandium-49	1,000	Arsenic-69	1,000
Titanium-44	1	Arsenic-70	1,000
Titanium-45	1,000	Arsenic-71	100
Vanadium-47	1,000	Arsenic-72	100
Vanadium-48	100	Arsenic-73	100
Vanadium-49	1,000	Arsenic-74	100
Chromium-48	1,000	Arsenic-76	100
Chromium-49	1,000	Arsenic-77	100
Chromium-51	1,000	Arsenic-78	1,000
Manganese-51	1,000	Selenium-70	1,000
Manganese-52m	1,000	Selenium-73m	1,000
Manganese-52	100	Selenium-73	100
Manganese-53	1,000	Selenium-75	100
Manganese-54	100	Selenium-79	100
Manganese-56	1,000	Selenium-81m	1,000
Iron-52	100	Selenium-81	1,000
Iron-55	100	Selenium-83	1,000
Iron-59	10	Bromine-74m	1,000
Iron-60	1	Bromine-74	1,000
Cobalt-55	100	Bromine-75	1,000
Cobalt-56	10	Bromine-76	100
Cobalt-57	100	Bromine-77	1,000
Cobalt-58m	1,000	Bromine-80m	1,000
Cobalt-58	100	Bromine-80	1,000
Cobalt-60m	1,000	Bromine-82	100
Cobalt-60	1	Bromine-83	1,000

120.297: continued

Radionuclide	Quantity (μCi)	Radionuclide	Quantity (μCi)
Bromine-84	1,000	Niobium-97	1,000
Krypton-74	1,000	Niobium-98	1,000
Krypton-76	1,000	Molybdenum-90	100
Krypton-77	1,000	Molybdenum-93m	100
Krypton-79	1,000	Molybdenum-93	10
Krypton-81	1,000	Molybdenum-99	100
Krypton-83m	1,000	Molybdenum-101	1,000
Krypton-85m	1,000	Technetium-93m	1,000
Krypton-85	1,000	Technetium-93	1,000
Krypton-87	1,000	Technetium-94m	1,000
Krypton-88	1,000	Technetium-94	1,000
Rubidium-79	1,000	Technetium-96m	1,000
Rubidium-81m	1,000	Technetium-96	100
Rubidium-81	1,000	Technetium-97m	100
Rubidium-82m	1,000	Technetium-97	1,000
Rubidium-83	100	Technetium-98	10
Rubidium-84	100	Technetium-99m	1,000
Rubidium-86	100	Technetium-99	100
Rubidium-87	100	Technetium-101	1,000
Rubidium-88	1,000	Technetium-104	1,000
Rubidium-89	1,000	Ruthenium-94	1,000
Strontium-80	100	Ruthenium-97	1,000
Strontium-81	1,000	Ruthenium-103	100
Strontium-83	100	Ruthenium-105	1,000
Strontium-85m	1,000	Ruthenium-106	1
Strontium-85	100	Rhodium-99m	1,000
Strontium-87m	1,000	Rhodium-99	100
Strontium-89	10	Rhodium-100	100
Strontium-90	0.1	Rhodium-101m	1,000
Strontium-91	100	Rhodium-101	10
Strontium-92	100	Rhodium-102m	10
Yttrium-86m	1,000	Rhodium-102	10
Yttrium-86	100	Rhodium-103m	1,000
Yttrium-87	100	Rhodium-105	100
Yttrium-88	10	Rhodium-106m	1,000
Yttrium-90m	1,000	Rhodium-107	1,000
Yttrium-90	10	Palladium-100	100
Yttrium-91m	1,000	Palladium-101	1,000
Yttrium-91	10	Palladium-103	100
Yttrium-92	100	Palladium-107	10
Yttrium-93	100	Palladium-109	100
Yttrium-94	1,000	Silver-102	1,000
Yttrium-95	1,000	Silver-103	1,000
Zirconium-86	100	Silver-104m	1,000
Zirconium-88	10	Silver-104	1,000
Zirconium-89	100	Silver-105	100
Zirconium-93	1	Silver-106m	100
Zirconium-95	10	Silver-106	1,000
Zirconium-97	100	Silver-108m	1
Niobium-88	1,000	Silver-11Om	10
Niobium-89m (66 min)	1,000	Silver-111	100
Niobium-89 (122 min)	1,000	Silver-112	100
Niobium-90	100	Silver-115	1,000
Niobium-93m	10	Cadmium-104	1,000
Niobium-94	1	Cadmium-107	1,000
Niobium-95m	10	Cadmium-109	1
Niobium-95	100	Cadmium-113m	0.1
Niobium-96	100	Cadmium-113	100

120.297: continued

Radionuclide	Quantity (μCi)	Radionuclide	Quantity (μCi)
Cadmium-115m	10	Tellurium-129m	10
Cadmium-115	100	Tellurium-129	1,000
Cadmium-117m	1,000	Tellurium-131m	10
Cadmium-117	1,000	Tellurium-131	100
Indium-109	1,000	Tellurium-132	10
Indium-110m (69.1m)	1,000	Tellurium-133m	100
Indium-11O (4.9h)	1,000	Tellurium-133	1,000
Indium-111	100	Tellurium-134	1,000
Indium-112	1,000	Iodine-120m	1,000
Indium-113m	1,000	Iodine-120	100
Indium-114m	10	Iodine-121	1,000
Indium-115m	1,000	Iodine-123	100
Indium-115	100	Iodine-124	10
Indium-116m	1,000	Iodine-125	1
Indium-117m	1,000	Iodine-126	1
Indium-117	1,000	Iodine-128	1,000
Indium-119m	1,000	Iodine-129	1
Tin-110	100	Iodine-130	10
Tin-111	1,000	Iodine-131	1
Tin-113	100	Iodine-132m	100
Tin-117m	100	Iodine-132	100
Tin-119m	100	Iodine-133	10
Tin-121m	100	Iodine-134	1,000
Tin-121	1,000	Iodine-135	100
Tin-123m	1,000	Xenon-120	1,000
Tin-123	10	Xenon-121	1,000
Tin-125	10	Xenon-122	1,000
Tin-126	10	Xenon-123	1,000
Tin-127	1,000	Xenon-125	1,000
Tin-128	1,000	Xenon-127	1,000
Antimony-115	1,000	Xenon-129m	1,000
Antimony-116m	1,000	Xenon-131m	1,000
Antimony-116	1,000	Xenon-133m	1,000
Antimony-117	1,000	Xenon-133	1,000
Antimony-118m	1,000	Xenon-135m	1,000
Antimony-119	1,000	Xenon-135	1,000
Antimony-120 (16m)	1,000	Xenon-138	1,000
Antimony-120 (5.76d)	100	Cesium-125	1,000
Antimony-122	100	Cesium-127	1,000
Antimony-124m	1,000	Cesium-129	1,000
Antimony-124	10	Cesium-130	1,000
Antimony-125	100	Cesium-131	1,000
Antimony-126m	1,000	Cesium-132	100
Antimony-126	100	Cesium-134m	1,000
Antimony-127	100	Cesium-134	10
Antimony-128 (10.4m)	1,000	Cesium-135m	1,000
Antimony-128 (9.O1h)	100	Cesium-135	100
Antimony-129	100	Cesium-136	10
Antimony-130	1,000	Cesium-137	10
Antimony-131	1,000	Cesium-138	1,000
Tellurium-116	1,000	Barium-126	1,000
Tellurium-121m	10	Barium-128	100
Tellurium-121	100	Barium-131m	1,000
Tellurium-123m	10	Barium-131	100
Tellurium-123	100	Barium-133m	100
Tellurium-125m	10	Barium-133	100
Tellurium-127m	10	Barium-135m	100
Tellurium-127	1,000	Barium-139	1,000

120.297: continued

Radionuclide	Quantity (μCi)	Radionuclide	Quantity (μCi)
Barium-140	100	Samarium-156	1,000
Barium-141	1,000	Europium-145	100
Barium-142	1,000	Europium-146	100
Lanthanum-131	1,000	Europium-147	100
Lanthanum-132	100	Europium-148	10
Lanthanum-135	1,000	Europium-149	100
Lanthanum-137	10	Europium-150 (12.62h)	100
Lanthanum-138	100	Europium-150 (34.2y)	1
Lanthanum-140	100	Europium-152m	100
Lanthanum-141	100	Europium-152	1
Lanthanum-142	1,000	Europium-154	1
Lanthanum-143	1,000	Europium-155	10
Cerium-134	100	Europium-156	100
Cerium-135	100	Europium-157	100
Cerium-137m	100	Europium-158	1,000
Cerium-137	1,000	Gadolinium-145	1,000
Cerium-139	100	Gadolinium-146	10
Cerium-141	100	Gadolinium-147	100
Cerium-143	100	Gadolinium-148	0.001
Cerium-144	1	Gadolinium-149	100
Praseodymium-136	1,000	Gadolinium-151	10
Praseodymium-137	1,000	Gadolinium-152	100
Praseodymium-138m	1,000	Gadolinium-153	10
Praseodymium-139	1,000	Gadolinium-159	100
Praseodymium-142m	1,000	Terbium-147	1,000
Praseodymium-142	100	Terbium-149	100
Praseodymium-143	100	Terbium-150	1,000
Praseodymium-144	1,000	Terbium-151	100
Praseodymium-145	100	Terbium-153	1,000
Praseodymium-147	1,000	Terbium-154	100
Neodymium-136	1,000	Terbium-155	1,000
Neodymium-138	100	Terbium-156m (5.Oh)	1,000
Neodymium-139m	1,000	Terbium-156m (24.4h)	1,000
Neodymium-139	1,000	Terbium-156	100
Neodymium-141	1,000	Terbium-157	10
Neodymium-147	100	Terbium-158	1
Neodymium-149	1,000	Terbium-160	10
Neodymium-151	1,000	Terbium-161	100
Promethium-141	1,000	Dysprosium-155	1,000
Promethium-143	100	Dysprosium-157	1,000
Promethium-144	10	Dysprosium-159	100
Promethium-145	10	Dysprosium-165	1,000
Promethium-146	1	Dysprosium-166	100
Promethium-147	10	Holmium-155	1,000
Promethium-148m	10	Holmium-157	1,000
Promethium-148	10	Holmium-159	1,000
Promethium-149	100	Holmium-161	1,000
Promethium-150	1,000	Holmium-162m	1,000
Promethium-151	100	Holmium-162	1,000
Samarium-141m	1,000	Holmium-164m	1,000
Samarium-141	1,000	Holmium-164	1,000
Samarium-142	1,000	Holmium-166m	1
Samarium-145	100	Holmium-166	100
Samarium-146	1	Holmium-167	1,000
Samarium-147	100	Erbium-161	1,000
Samarium-151	10	Erbium-165	1,000
Samarium-153	100	Erbium-169	100
Samarium-155	1,000	Erbium-171	100

120.297: continued

Radionuclide	Quantity (μCi)	Radionuclide	Quantity (μCi)
Erbium-172	100	Tantalum-186	1,000
Thulium-162	1,000	Tungsten-176	1,000
Thulium-166	100	Tungsten-177	1,000
Thulium-167	100	Tungsten-178	1,000
Thulium-170	10	Tungsten-179	1,000
Thulium-171	10	Tungsten-181	1,000
Thulium-172	100	Tungsten-185	100
Thulium-173	100	Tungsten-187	100
Thulium-175	1,000	Tungsten-188	10
Ytterbium-162	1,000	Rhenium-177	1,000
Ytterbium-166	100	Rhenium-178	1,000
Ytterbium-167	1,000	Rhenium-181	1,000
Ytterbium-169	100	Rhenium-182 (12.7h)	1,000
Ytterbium-175	100	Rhenium-182 (64.Oh)	100
Ytterbium-177	1,000	Rhenium-184m	10
Ytterbium-178	1,000	Rhenium-184	100
Lutetium-169	100	Rhenium-186m	10
Lutetium-170	100	Rhenium-186	100
Lutetium-171	100	Rhenium-187	1,000
Lutetium-172	100	Rhenium-188m	1,000
Lutetium-173	10	Rhenium-188	100
Lutetium-174m	10	Rhenium-189	100
Lutetium-174	10	Osmium-180	1,000
Lutetium-176m	1,000	Osmium-181	1,000
Lutetium-176	100	Osmium-182	100
Lutetium-177m	10	Osmium-185	100
Lutetium-177	100	Osmium-189m	1,000
Lutetium-178m	1,000	Osmium-191m	1,000
Lutetium-178	1,000	Osmium-191	100
Lutetium-179	1,000	Osmium-193	100
Hafnium-170	100	Osmium-194	1
Hafnium-172	1	Iridium-182	1,000
Hafnium-173	1,000	Iridium-184	1,000
Hafnium-175	100	Iridium-185	1,000
Hafnium-177m	1,000	Iridium-186	100
Hafnium-178m	0.1	Iridium-187	1,000
Hafnium-179m	10	Iridium-188	100
Hafnium-180m	1,000	Iridium-189	100
Hafnium-181	10	Iridium-190m	1,000
Hafnium-182m	1,000	Iridium-190	100
Hafnium-182	0.1	Iridium-192m (1.4m)	10
Hafnium-183	1,000	Iridium-192 (73.8d)	1
Hafnium-184	100	Iridium-194m	10
Tantalum-172	1,000	Iridium-194	100
Tantalum-173	1,000	Iridium-195m	1,000
Tantalum-174	1,000	Iridium-195	1,000
Tantalum-175	1,000	Platinum-186	1,000
Tantalum-176	100	Platinum-188	100
Tantalum-177	1,000	Platinum-189	1,000
Tantalum-178	1,000	Platinum-191	100
Tantalum-179	100	Platinum-193m	100
Tantalum-180m	1,000	Platinum-193	1,000
Tantalum-180	100	Platinum-195m	100
Tantalum-182m	1,000	Platinum-197m	1,000
Tantalum-182	10	Platinum-197	100
Tantalum-183	100	Platinum-199	1,000
Tantalum-184	100	Platinum-200	100
Tantalum-185	1,000	Gold-193	1,000

120.297: continued

Radionuclide	Quantity (μCi)	Radionuclide	Quantity (μCi)
Gold-194	100	Astatine-207	100
Gold-195	10	Astatine-211	10
Gold-198m	100	Radon-220	1
Gold-198	100	Radon-222	1
Gold-199	100	Francium-222	100
Gold-200m	100	Francium-223	100
Gold-200	1,000	Radium-223	0.1
Gold-201	1,000	Radium-224	0.1
Mercury-193m	100	Radium-225	0.1
Mercury-193	1,000	Radium-226	0.1
Mercury-194	1	Radium-227	1,000
Mercury-195m	100	Radium-228	0.1
Mercury-195	1,000	Actinium-224	1
Mercury-197m	100	Actinium-225	0.01
Mercury-197	1,000	Actinium-226	0.1
Mercury-199m	1,000	Actinium-227	0.001
Mercury-203	100	Actinium-228	1
Thallium-194m	1,000	Thorium-226	10
Thallium-194	1,000	Thorium-227	0.01
Thallium-195	1,000	Thorium-228	0.001
Thallium-197	1,000	Thorium-229	0.001
Thallium-198m	1,000	Thorium-230	0.001
Thallium-198	1,000	Thorium-231	100
Thallium-199	1,000	Thorium-232	100
Thallium-201	1,000	Thorium-234	10
Thallium-200	1,000	Thorium-natural	100
Thallium-202	100	Protactinium-227	10
Thallium-204	100	Protactinium-228	1
Lead-195m	1,000	Protactinium-230	0.1
Lead-198	1,000	Protactinium-231	0.001
Lead-199	1,000	Protactinium-232	1
Lead-200	100	Protactinium-233	100
Lead-201	1,000	Protactinium-234	100
Lead-202m	1,000	Uranium-230	0.01
Lead-202	10	Uranium-231	100
Lead-203	1,000	Uranium-232	0.001
Lead-205	100	Uranium-233	0.001
Lead-209	1,000	Uranium-234	0.001
Lead-210	0.0	Uranium-235	0.001
Lead-211	100	Uranium-236	0.001
Lead-212	1	Uranium-237	100
Lead-214	100	Uranium-238	100
Bismuth-200	1,000	Uranium-239	1,000
Bismuth-201	1,000	Uranium-240	100
Bismuth-202	1,000	Uranium-natural	100
Bismuth-203	100	Neptunium-232	100
Bismuth-205	100	Neptunium-233	1,000
Bismuth-206	100	Neptunium-234	100
Bismuth-207	10	Neptunium-235	100
Bismuth-210m	0.1	Neptunium-236 (1.15E+5y)	0.001
Bismuth-210	1	Neptunium-236 (22.5h)	1
Bismuth-212	10	Neptunium-237	0.001
Bismuth-213	10	Neptunium-238	10
Bismuth-214	100	Neptunium-239	100
Polonium-203	1,000	Neptunium-240	1,000
Polonium-205	1,000	Plutonium-234	10
Polonium-207	1,000	Plutonium-235	1,000
Polonium-210	0.1	Plutonium-236	0.001

120.297: continued

Radionuclide	Quantity (μCi)	Radionuclide	Quantity (μCi)
Plutonium-237	100	Curium-247	0.001
Plutonium-238	0.001	Curium-248	0.001
Plutonium-239	0.001	Curium-249	1,000
Plutonium-240	0.001	Berkelium-245	100
Plutonium-241	0.01	Berkelium-246	100
Plutonium-242	0.001	Berkelium-247	0.001
Plutonium-243	1,000	Berkelium-249	0.1
Plutonium-244	0.001	Berkelium-250	10
Plutonium-245	100	Californium-244	100
Americium-237	1,000	Californium-246	1
Americium-238	100	Californium-248	0.01
Americium-239	1,000	Californium-249	0.001
Americium-240	100	Californium-250	0.001
Americium-241	0.001	Californium-251	0.001
Americium-242m	0.001	Californium-252	0.001
Americium-242	10	Californium-253	0.1
Americium-243	0.001	Californium-254	0.001
Americium-244m	100	Einsteinium-250	100
Americium-244	10	Einsteinium-251	100
Americium-245	1,000	Einsteinium-253	0.1
Americium-246m	1,000	Einsteinium-254m	1
Americium-246	1,000	Einsteinium-254	0.01
Curium-238	100	Fermium-252	1
Curium-240	0.1	Fermium-253	1
Curium-241	1	Fermium-254	10
Curium-242	0.01	Fermium-255	1
Curium-243	0.001	Fermium-257	0.01
Curium-244	0.001	Mendelevium-257	10
Curium-245	0.001	Mendelevium-258	0.01
Curium-246	0.001		

120.297: continued

Radionuclide	Quantity (μCi)	Radionuclide	Quantity (μCi)
Any alpha-emitting radionuclide not listed above or mixtures of alpha emitters of unknown composition	0.001	Any radionuclide other than alpha-emitting radionuclides not listed above, or mixtures of beta emitters of unknown composition	0.01

NOTE: For purposes of 105 CMR 120.242(E), 120.245(A), and 120.281(A) where there is involved a combination of radionuclides in known amounts, the limit for the combination should be derived as follows: determine, for each radionuclide in the combination, the ratio between the quantity present in the combination and the limit otherwise established for the specific radionuclide when not in combination. The sum of such ratios for all radionuclides in the combination may not exceed "1" -- that is, unity.

[1] The quantities listed above were derived by taking 1/10th of the most restrictive ALI listed in 105 CMR 120.296: *Appendix B*, Table I, Columns 1 and 2, rounding to the nearest factor of 10, and constraining the values listed between 0.001 and 1,000 microcuries (37 becquerels and 37 megabecquerels). Values of 100 microcuries (3.7 megabecquerels) have been assigned for radionuclides having a radioactive half-life in excess of 10^9 years, except rhenium, 1,000 microcuries (37 megabecquerels), to take into account their low specific activity.

120.298: Appendix D - Nationally Tracked Source Thresholds

The Terabecquerel (TBq) values are the regulatory standard. The curie (Ci) values specified are obtained by converting from the TBq value. The curie values are provided for practical usefulness only and are rounded after conversion.

Radioactive material	Category 1(TBq)	Category 1(Ci)	Category 2(TBq)	Category 2(Ci)
Actinium-227	20	540	0.2	5.4
Americium-241	60	1600	0.6	16
Americium-241/Be	60	1600	0.6	16
Californium-252	20	540	0.2	5.4
Cobalt-60	30	810	0.3	8.1
Curium-244	50	1400	0.5	14
Cesium-137	100	2700	1	27
Gadolinium-153	1000	27000	10	270
Iridium-192	80	2200	0.8	22
Plutonium-238	60	1600	0.6	16
Plutonium-239/Be	60	1600	0.6	16
Polonium-210	60	1600	0.6	16
Promethium-147	40000	1100000	400	11000
Radium-226	40	1100	0.4	11
Selenium-75	200	5400	2	54
Strontium-90	1000	27000	10	270
Thorium-228	20	540	0.2	5.4
Thorium-229	20	540	0.2	5.4
Thulium-170	20000	540000	200	5400
Ytterbium-169	300	8100	3	81

120.299: Appendix E -- Classification and Characteristics of Low-level Radioactive Waste

(A) Classification of Radioactive Waste for Land Disposal.

(1) Considerations. Determination of the classification of radioactive waste involves two considerations. First, consideration must be given to the concentration of long-lived radionuclides (and their shorter-lived precursors) whose potential hazard will persist long after such precautions as institutional controls, improved waste form, and deeper disposal have ceased to be effective. These precautions delay the time when long-lived radionuclides could cause exposures. In addition, the magnitude of the potential dose is limited by the concentration and availability of the radionuclide at the time of exposure. Second, consideration must be given to the concentration of shorter-lived radionuclides for which requirements on institutional controls, waste form, and disposal methods are effective.

(2) Classes of Waste.

(a) Class A waste is waste that is usually segregated from other waste classes at the disposal site. The physical form and characteristics of Class A waste must meet the minimum requirements set forth in 105 CMR 120.299(B)(1). If Class A waste also meets the stability requirements set forth in 105 CMR 120.299(B)(2), it is not necessary to segregate the waste for disposal.

(b) Class B waste is waste that must meet more rigorous requirements on waste form to ensure stability after disposal. The physical form and characteristics of Class B waste must meet both the minimum and stability requirements set forth in 105 CMR 120.299(B).

(c) Class C waste is waste that not only must meet more rigorous requirements on waste form to ensure stability but also requires additional measures at the disposal facility to protect against inadvertent intrusion. The physical form and characteristics of Class C waste must meet both the minimum and stability requirements set forth in 105 CMR 120.299(B).

(3) Classification Determined by Long-lived Radionuclides. If the radioactive waste contains only radionuclides listed in Table I, classification shall be determined as follows:

(a) If the concentration does not exceed 0.1 times the value in Table I, the waste is Class A.

(b) If the concentration exceeds 0.1 times the value in Table I, but does not exceed the value in Table I, the waste is Class C.

(c) If the concentration exceeds the value in Table I, the waste is not generally acceptable for disposal at a facility licensed by the Agency.

(d) For wastes containing mixtures of radionuclides listed in Table I, the total concentration shall be determined by the sum of fractions rule described in 105 CMR 120.299(A)(7).

TABLE I

Radionuclide	Concentration curie/cubic meter[a]	nanocurie/gram[b]
C-14	8.0	
C-14 in activated metal	80.0	
Ni-59 in activated metal	220.0	
Nb-94 in activated metal	0.2	
Tc-99	3.0	
I-129	0.08	
Alpha emitting transuranic radionuclides with half-life greater than five years		100.0
Pu-241		3,500.0
Cm-242		20,000.0
Ra-226		100.0

[a] To convert the Ci/m^3 values to gigabecquerel (GBq) per cubic meter, multiply the Ci/m^3 value by 37.

[b] To convert the nCi/g values to becquerel (Bq) per gram, multiply the nCi/g value by 37.

120.299: continued

(4) Classification Determined by Short-lived Radionuclides. If the waste does not contain any of the radionuclides listed in Table I, classification shall be determined based on the concentrations shown in Table II. However, as specified in 105 CMR 120.299(A)(6), if radioactive waste does not contain any nuclides listed in either Table I or II, it is Class A.

(a) If the concentration does not exceed the value in Column 1, the waste is Class A.

(b) If the concentration exceeds the value in Column 1 but does not exceed the value in Column 2, the waste is Class B.

(c) If the concentration exceeds the value in Column 2 but does not exceed the value in Column 3, the waste is Class C.

(d) If the concentration exceeds the value in Column 3, the waste is not generally acceptable for near-surface disposal.

(e) For wastes containing mixtures of the radionuclides listed in Table II, the total concentration shall be determined by the sum of fractions rule described in 105 CMR 120.299(A)(7).

TABLE II

Radionuclide	Concentration, curie/cubic meter*		
	Column 1	Column 2	Column 3
Total of all radio-nuclides with less than 5-year half-life	700.0	*	*
H-3	40.0	*	*
Co-60	700.0	*	*
Ni-63	3.5	70.0	700.0
Ni-63 in activated metal	35.0	700.0	7000.0
Sr-90	0.04	150.0	7000.0
Cs-137	1.0	44.0	4600.0

* AGENCY NOTE: To convert the Ci/m^3 value to gigabecquerel (GBq) per cubic meter, multiply the Ci/m^3 value by 37. There are no limits established for these radionuclides in Class B or C wastes. Practical considerations such as the effects of external radiation and internal heat generation on transportation, handling, and disposal will limit the concentrations for these wastes. These wastes shall be Class B unless the concentrations of other radionuclides in Table II determine the waste to be Class C independent of these radionuclides.

(5) Classification Determined by Both Long- and Short-lived Radionuclides. If the radioactive waste contains a mixture of radionuclides, some of which are listed in Table I and some of which are listed in Table II, classification shall be determined as follows:

(a) If the concentration of a radionuclide listed in Table I is less than 0.1 times the value listed in Table I, the class shall be that determined by the concentration of radionuclides listed in Table II.

(b) If the concentration of a radionuclide listed in Table I exceeds 0.1 times the value listed in Table I, but does not exceed the value in Table I, the waste shall be Class C, provided the concentration of radionuclides listed in Table II does not exceed the value shown in Column 3 of Table II.

(6) Classification of Wastes with Radionuclides other than those Listed in Tables I and II. If the waste does not contain any radionuclides listed in either Table I or II, it is Class A.

120.299: continued

(7) The Sum of the Fractions Rule for Mixtures of Radionuclides. For determining classification for waste that contains a mixture of radionuclides, it is necessary to determine the sum of fractions by dividing each radionuclide's concentration by the appropriate limit and adding the resulting values. The appropriate limits must all be taken from the same column of the same table. The sum of the fractions for the column must be less than 1.0 if the waste class is to be determined by that column. Example: A waste contains Sr-90 in a concentration of 1.85 TBq/m^3 (50 Ci/m^3) and Cs-137 in a concentration of 814 GBq/m^3 (22 Ci/m^3). Since the concentrations both exceed the values in Column 1, Table II, they must be compared to Column 2 values. For Sr-90 fraction, 50/150 = 0.33., for Cs-137 fraction, 22/44 = 0.5; the sum of the fractions = 0.83. Since the sum is less than 1.0, the waste is Class B.

(8) Determination of Concentrations in Wastes. The concentration of a radionuclide may be determined by indirect methods such as use of scaling factors which relate the inferred concentration of one radionuclide to another that is measured, or radionuclide material accountability, if there is reasonable assurance that the indirect methods can be correlated with actual measurements. The concentration of a radionuclide may be averaged over the volume of the waste, or weight of the waste if the units are expressed as becquerel (nanocurie) per gram.

(B) Radioactive Waste Characteristics.

(1) The following are minimum requirements for all classes of waste and are intended to facilitate handling and provide protection of health and safety of personnel at the disposal site.

(a) Wastes shall be packaged in conformance with the conditions of the license issued to the site operator to which the waste will be shipped. Where the conditions of the site license are more restrictive than the provisions of Part D, the site license conditions shall govern.

(b) Wastes shall not be packaged for disposal in cardboard or fiberboard boxes.

(c) Liquid waste shall be packaged in sufficient absorbent material to absorb twice the volume of the liquid.

(d) Solid waste containing liquid shall contain as little freestanding and noncorrosive liquid as is reasonably achievable, but in no case shall the liquid exceed 1% of the volume.

(e) Waste shall not be readily capable of detonation or of explosive decomposition or reaction at normal pressures and temperatures, or of explosive reaction with water.

(f) Waste shall not contain, or be capable of generating, quantities of toxic gases, vapors, or fumes harmful to persons transporting, handling, or disposing of the waste. This does not apply to radioactive gaseous waste packaged in accordance with 105 CMR 120.299(B)(1)(h).

(g) Waste must not be pyrophoric. Pyrophoric materials contained in wastes shall be treated, prepared, and packaged to be nonflammable.

(h) Wastes in a gaseous form shall be packaged at an absolute pressure that does not exceed 1.5 atmospheres at 20°C. Total activity shall not exceed 3.7 TBq (100 Ci) per container.

(i) Wastes containing hazardous, biological, pathogenic, or infectious material shall be treated to reduce to the maximum extent practicable the potential hazard from the nonradiological materials.

(2) The following requirements are intended to provide stability of the waste. Stability is intended to ensure that the waste does not degrade and affect overall stability of the site through slumping, collapse, or other failure of the disposal unit and thereby lead to water infiltration. Stability is also a factor in limiting exposure to an inadvertent intruder, since it provides a recognizable and nondispersible waste.

(a) Waste shall have structural stability. A structurally stable waste form will generally maintain its physical dimensions and its form, under the expected disposal conditions such as weight of overburden and compaction equipment, the presence of moisture, and microbial activity, and internal factors such as radiation effects and chemical changes. Structural stability can be provided by the waste form itself, processing the waste to a stable form, or placing the waste in a disposal container or structure that provides stability after disposal.