Guidelines for Public Water Systems

Appendix M
Consumer Confidence Reporting Guidelines

Updated Feb 2014

Appendix M is required by the Massachusetts Drinking Water regulations 310CMR 22.16A

Please refer to the booklet "Recommended Tips to Provide a More User Friendly CCR" for information on how you can improve the presentation of your CCR information.

TABLE OF CONTENTS

COMMUNITY PUBLIC WATER SYSTEMS **3**

INTRODUCTION/OVERVIEW 3
REPORT CONTENT 4
Water System and Source Water Information *4*
Source Water Assessment Program (SWAP) *4*
Language Translation Requirements for Systems with Large Populations *6*
Required Definitions *6*
Detection of Regulated Contaminants *7*
Table Inclusion for Detected Regulated Contaminants *8*
Unregulated Contaminants *10*
Compliance with Other Drinking Water Regulations *13*
Required Educational Information *16*
Recommended Additions to CCR *18*
Report Delivery *19*
Where to Send Your Report *20*
More Information *23*

NON COMMUNITY PUBLIC WATER SYSTEMS **23**

LIST OF ATTACHMENTS **25**

Att. B - List of Consumer Confidence Report Help Aids *29*
Att. C - Regulated Contaminants Chart *30*
Att. D - Unregulated Contaminants Chart *44*
Att. E - Secondary Contaminants Chart *56*
Att. F - How to Report Monitoring Data (Tables) *59*
1) Compliance with the MCL is determined annually or less frequently. 59
2) Compliance with MCL determined by running annual average of all samples taken from one sampling point. 60
3) Compliance with MCL determined by a running annual average of all samples at all sampling points 60
4) Lead and Copper 62
5) Turbidity 66
6) Beta Particles 62
7) Uranium 67
8) Monitoring Waivers 66
9) MCL (Maximum Contaminant Level) 65
10) NPDWR Violations 68
11) Monitoring and Reporting (M&R) Violations 67
Att. G - Treatment Techniques Language *70*
Att. H - Sample SWAP Language *76*
Att. I - Sample Cross Connection Language *77*
Att. J - Using Environmentally Friendly Materials *80*
Att. K - Language Translation Requirements per City/Town *81*
Att. L - Preparing for Your Report *83*
Att. M - Compliance Checklist for Your CCR *85*
Att. N - Request for Language Changes *87*
Att. O - Sample CCR *89*

Community Public Water Systems

Introduction/Overview

All community drinking water systems are required to prepare and distribute Drinking Water Consumer Confidence Reports (CCR) by July 1 of each year. CCRs are required by the federal 1996 Safe Drinking Water Act Amendments.

Who Must Prepare Consumer Confidence Reports?
All community water systems that serve at least 25 year-round residents or that have 15 or more service connections must prepare and distribute a CCR. A public water system that sells its water to another community system must provide the buyer with monitoring data and other information that will enable the buyer to produce their CCR.

When Should the Consumer Confidence Report Be Distributed?
The data used in preparing the report is based on a calendar year. CCR reports should be delivered to customers and agencies by July 1 of each year.

Public water systems that sell to a community system must deliver all the pertinent information to their buyers by April 1 each year. For all new community water systems, the first CCR is due July 1 of the year following the first full year of operation, and annually thereafter.

What Information Is Required?

Although the community water supplier will have some flexibility in determining the form and content, the annual report must contain the following information:

- PWS basic information e.g., PWS name, ID#, reporting year, etc. and source(s) of the drinking water along with phone numbers for additional information.
- Information on obtaining a copy of the water system's source water assessment-SWAP
- Language translation requirements if necessary
- Required definitions and variances / exemptions if applicable
- Tables for detected contaminants including MCLs, levels of detect, potential health effects, violations, likely sources of contamination, and corrective measures taken to address the violation.
- Compliance with other drinking water regulations, such as monitoring and reporting for compliance data, record keeping, filtration, disinfection, cross connection control, and lead and copper control
- Detections of unregulated contaminants and potential sources
- Required language and educational information and if necessary, additional informational statements on arsenic, *Cryptosporidium*, manganese, nitrate, and lead.

Report Content

Water System and Source Water Information

Each CCR must include:

- The name of the public water system, PWS ID #, report year, etc.
- Name and telephone number of a person at the water system who can provide additional information and answer questions about the report
- Information on public education and/or public meetings to discuss water quality issues
- Description of source(s) (ground water, surface water, or blend), and location(s); for security purposes, you do not need to use a map of your system. A simple location description such as "Collar Street Wells" is sufficient.
- Explanation of any interconnections and back-up sources to note source variation during the year. It is important that consumers understand that the source of their water may vary during the year.

  If you distribute water from your own emergency or back-up sources, you will need to explain this to consumers using language similar to interconnections described below. If there are detects you will need to include these in your CCR's tables.

  If you use temporary interconnections from another system and if the source's contribution is insignificant such as a week or less, you must, at a minimum, mention the name of the system(s) providing the temporary source of water, the period or date when it occurred, percent or amount of water received, statement as to any concerns about the water received, and contact information for the temporary source if the consumer wants more information.

  If the interconnection is significant you must also supply the others source's CCR along with your own. If in doubt about what is significant, please call your regional MassDEP office for direction.
- Required Educational Information

Source Water Assessment Program (SWAP)

MassDEP has prepared source water assessments in 2004 for all public water systems as required by the Safe Drinking Water Act amendments**.** Each CCR must include the following:

- Highlight significant sources of contamination in the source water area if information is readily available

- Include a brief summary of the water system's susceptibility to potential sources of contamination, using language provided by MassDEP

Notify consumers of the availability of the report and the means to obtain it. (SWAP reports can be found at http://www.mass.gov/eea/agencies/massdep/water/drinking/source-water-protection-for-drinking-water-supplies.html#5 Note: If you are a new system that was registered after January 1, 2005 you will not have had a SWAP report done by MassDEP. All SWAP reports were completed prior to that time. You will want to add language to your CCR saying that your system does not have a SWAP report completed and also give your own evaluation of the source protection area.

The water system may wish to provide more source protection information than what is found in the SWAP report to better inform and involve customers. Consider adding the information noted below.

- The number and type of sources your system uses (reservoirs, bedrock wells, wells in sand and gravel, purchased water or a combination)

- A simple locus map of water sources and their protection areas (Zone I, II, IWPA, A, B, C)

- Source susceptibility and protection measures, for example:
  "The Anytown Water Department owns 67% of the watershed of Great Pond Reservoir. The remainder of the acreage is largely low-density residential development."
  Or
  "Wells #1 and #2 are located in an area of mixed residential, commercial, and industrial development. The Town of Waterville has adopted a bylaw to prohibit inappropriate future commercial and industrial development in the area; and the board of health has an inspection and education program in place for local businesses."

- The public water system's educational efforts with the public, schools, and the business community

- Measures citizens can use to protect their water source for example:
  "One of the biggest threats to the Main Street well is improperly maintained septic systems. You can help protect your drinking water quality by pumping out your septic system every two years. Never dump hazardous substances down septic or storm drains. Do not use septic system cleaners."

- Volunteer opportunities, for example:
  "Contact Amy Smith to volunteer for water quality monitoring teamwork, education programs, or assisting town committees."

- Local contact name for more information on protection issues

Language Translation Requirements for Systems with Large Populations

If your system serves communities with 10% or greater than 1,000 people (whichever is fewer) of non-English speaking consumers, the report must contain a statement in the appropriate language(s) regarding the importance of the report.

Example statement:
"This report contains very important information about your drinking water. Please translate it, or speak with someone who understands it."

If 25% or more of the population served by the system speaks one particular language, the entire report must be translated into that specific language. You must send a copy of the translated report to the required offices (see "Where to Send Your Report"). You must keep an electronic or hard copy of the translated report along with your English language report in your files (for a minimum of 3 years) so that it is immediately on hand to send out when requested.

In order to determine which cities have a large population, of non-English speaking persons, MassDEP used the 2010 U.S. Census data. This information does not reflect actual ethnic populations in all cities; but does show the actual number of persons who only speak a language other than English in a household. This information is currently the best available to determine which ethnic populations will require information in their native language.

(See Attachment K to determine whether or not your water system serves a city or town with language requirements.)

Required Definitions

The following definitions must be included in the CCR for understanding the contamination data.

- **Maximum Contaminant Level or MCL:** The highest level of a contaminant that is allowed in drinking water. MCLs are set as close to the MCLGs as feasible using the best available treatment technology.

- **Maximum Contaminant Level Goal or MCLG:** The level of a contaminant in drinking water below which there is no known or expected risk to health. MCLGs allow for a margin of safety.

The following definitions must be included in the report only if your report contains information on a contaminant that is regulated by an Action Level or Treatment Technique. The definition for 90th Percentile is optional.

- **Action Level:** The concentration of a contaminant that, if exceeded, triggers treatment or other requirements, which a water system must follow.

- **Treatment Technique (TT):** A required process intended to reduce the level of a contaminant in drinking water.

- **90th Percentile**: Out of every 10 homes sampled, 9 were at or below this level.

The following definitions must be included in the report only if the system adds a chemical disinfectant or oxidant and is regulated by the Disinfection Byproducts Rule (310 CMR 22.07E).

- **Maximum Residual Disinfectant Level (MRDL):** The highest level of a disinfectant allowed in drinking water. There is convincing evidence that addition of a disinfectant is necessary for control of microbial contaminants.

- **Maximum Residual Disinfectant Level Goal (MRDLG)**: The level of a drinking water disinfectant below which there is no known or expected risk to health. MRDLGs do not reflect the benefits of the use of disinfectants to control microbial contaminants.

Add the definition of SMCL if used in your report.

- **Secondary Maximum Contaminant Level or SMCL:** The highest level of a contaminant that is allowed in drinking water for the secondary contaminants.

The following definition must be included in the CCR only if the water system was under a variance or exemption during the reportable calendar year.

- **Variances and Exemptions:** State or EPA permission not to meet an MCL or a treatment technique under certain conditions

Add any additional definitions of acronyms or abbreviations used in your report.

The following definitions must be included in the CCR only if your report contains information regarding a Level 1 or Level 2 Assessment required under the Revised Total Coliform Rule (310 CMR 22.05(4).

- **Level 1 Assessment**: A Level 1 assessment is a study of the water system to identify potential problems and determine (if possible) why total coliform bacteria have been found in the water system.
- **Level 2 Assessment**: A Level 2 assessment is a very detailed study of the water system to identify potential problems and determine (if possible) why an E. coli MCL violation has occurred and/or why total coliform bacteria have been found in the water system on multiple occasions.

Detection of Regulated Contaminants

Only detected contaminants in finished water are reported in the CCR. (The exception is Groundwater Rule reporting. Please see special GWR section.) A detected contaminant is any contaminant observed at or above its minimum laboratory detection limit or method detection limit (MDL).

The CCR must contain a table showing the highest level of each detected contaminant and the range of levels of that contaminant for the year, if more than one sample was taken. The table must also contain:

- Maximum contaminant level (MCL)
- Maximum contaminant level goal (MCLG)
- Maximum residual disinfectant level (MRDL) and maximum residual disinfectant level goal (MRDLG) if using chemical disinfectants or oxidants
- The likely source(s) of contaminant

Use of CCR units requires that the MCL be expressed as a number greater than 1.0. Report the MCLG and level of the detected contaminant in those same units. For example, atrazine is usually reported in mg/l. The MCL for atrazine is 0.003 mg/l. If the system detected atrazine at 0.0003mg/l, it is assumed that it would be difficult for consumers to understand at a glance that your water is one-tenth of the MCL.

Thus for this example, you would multiply 0.003 (the MCL) by 1000 to convert mg/l (ppm) to ppb which would now be the whole number, 3. The result would be clearer that a detection of 0.3 ppb is one tenth the MCL of 3 ppb.

See Attachment C for help in converting MCLs and monitoring data for the CCR.

- The CCR should reflect monitoring performed for the past calendar year. If there is no recent monitoring data for a source, include in the table the latest monitoring information available, but not data older than 5 years. For example, if the system samples for a contaminant once every three years, it would need to report the same detected level in each of the three years until it takes a new sample as well as the date that the sample was taken. Include a statement explaining why the system does not monitor regularly for the contaminants in question; for example:
  "MassDEP has reduced the monitoring requirements for _____ to less often than once per year because the source is not at risk of contamination. The last sample collected was on _____, and was found to be free of this contaminant."

Table Inclusion for Detected Regulated Contaminants

The following must be included for each detected regulated contaminant:

- **Level of Contaminant**
  Must be expressed in the same units as the MCL and MCLG
- **Highest Detected Level, Highest Average, or Average and Range**

a. Highest Detected Level
If compliance is determined annually or less frequently, include the highest detected level at any sampling point and the range of detected levels, if applicable.

b. Highest Average
If compliance is determined by a running annual average of all the samples taken from a sampling point, include the highest average of any of the sampling points (as reported to the state for compliance purposes) and the range of detections.

c. Average or Range
If compliance is determined by a running annual average of all samples at all sampling points, include the average of all samples and the range of detected levels. If an MCL was exceeded in the calendar year, due to a high level in the previous calendar year, please include the previous data

- **Some Specific Examples:**

GWR – Groundwater Rule
This rule is for systems that are only groundwater sources that are not under the influence of surface water nor are manifolded with surface water. These systems must report the total number of positive samples for the year for all fecal indicator positive ground water *source (or raw water)* samples (*E.Coli,* enterococci, or coliphage). Also see section on how to publically notify consumers for fecal indicators (Compliance with Other Drinking Water Requirements).

DBPR - Disinfection By-product Rule
List the highest average of any of the sampling points and the range of all the sampling points.

Free, total, or combined chlorine – Report the highest quarterly running annual average and report the range of individual distribution sample results.

Total trihalomethanes/haloacetic acids – Report the highest quarterly running annual average and report the range of detects.

Bromate – Report the highest quarterly running annual average and report the range of detects.

Chlorite – Report the highest monthly three-sample set average and report the range of detects in all three-sample sets collected during the year.

Chlorine dioxide – Report the highest individual sample result taken at the entry point and report the range of detects at the entry point only.
If your system experienced a chlorine dioxide violation, you must include the following statement: *Compliance with the MRDL of chlorine dioxide is based on consecutive daily samples. (PWS Name) had (#of violation) MRDL violations in (year).*

Lead and copper

Include the 90th percent value from the most recent sampling and the number of sampling sites exceeding the action level.

Total coliform

a. Systems that collect fewer than 40 samples per month must include the highest number of positive samples collected in any one month.

b. Systems that collect 40 or more samples per month must include the highest percentage of positive samples collected in any one month.

Turbidity

a. When reported as an MCL for systems that must install filtration but have not, include the highest average monthly value.

b. When reported as a TT for systems that meet the criteria for avoiding filtration, include the highest monthly value. Explain the reasons for measuring turbidity; for example: "Turbidity is a measure of the cloudiness of the water. We monitor it because it is a good indicator of water quality."

c. When reported as a TT for systems that filter and use turbidity as an indicator of filtration performance, include the highest single measurement and the lowest monthly percentage of samples meeting the turbidity limits specified in 310 CMR 22.20 for the relevant filtration technology. Explain the reasons for measuring turbidity; for example: *"Turbidity is a measure of the cloudiness of the water. We monitor it because it is a good indicator of the effectiveness of our filtration system."*

Other Contaminants

Any contaminant detected in violation of an MCL, MRDL, treatment technique, or exceeding an action level must be clearly highlighted in the table. Explain the length of the violation/exceedence, likely source, the potential health effects (*see Attachment C*), and actions taken to address the violation or exceedence in a subsequent paragraph.

Unregulated Contaminants

If the system detected unregulated contaminants for which state or federal rules require monitoring (except for *Cryptosporidium*) include the average of the entire year's monitoring results and the range of detections. Include an explanation for the system's monitoring of unregulated contaminants, such as this:

> *"Unregulated contaminants are those for which US EPA has not established drinking water standards. The purpose of unregulated contaminant monitoring is to assist US EPA in determining their occurrence in drinking water and whether future regulation is warranted".*

Systems that are required by US EPA under the Unregulated Contaminant Monitoring Rule 3 (UCMR3) to sample for unregulated contaminants must report any detect over the reporting value. See the Unregulated Chart for more information in Attachment D.

If voluntary monitoring indicates the presence of unregulated contaminants in the finished water, MassDEP encourages you to report any results that may indicate a health concern, that is, any detection above a proposed MCL or health advisory level to indicate concern.

EPA recommends that the report include the results of the monitoring and an explanation of the significance of the results. Note any health advisory or proposed MCL.

Some specific examples

Cryptosporidium
If monitoring indicates the presence of C*ryptosporidium* either in the source water or finished water, the CCR must include the following:

- A summary of the results of the monitoring

- An explanation of the significance of the results. The report must tell customers if they need to be concerned by the information in the CCR.

Example:

> *"Cryptosporidium is a microbial parasite found in surface water throughout the U.S. Although filtration removes Cryptosporidium, the most commonly used filtration methods cannot guarantee 100% removal. Our monitoring indicates the presence of these organisms in our source water and/or finished water. Current test methods do not allow us to determine if the organisms are dead or if they are capable of causing disease. Symptoms of infection include nausea, diarrhea, and abdominal cramps.*
>
> *"Most healthy individuals are able to overcome the disease within a few weeks. However, immuno-compromised people have more difficulty and are at greater risk of developing severe, life-threatening illness. Immuno-compromised individuals are encouraged to consult their doctor regarding appropriate precautions to prevent infection. Cryptosporidium must be ingested for it to cause disease, and may be passed through other means than drinking water."*

Radon
If monitoring indicates the presence of radon in finished water, include in the report the results of monitoring and an explanation of the significance of the results. The report must tell customers if they need to be concerned by the information in the CCR.

Example:

> *"Radon is a radioactive gas that you cannot see, taste, or smell. It is found throughout the United States. Radon can move up through the ground and into a home through cracks and holes in the foundation. Radon can build up to high levels in all types of homes. Radon can also get into indoor air when released from tap water from showering,*

washing dishes, and other household activities. Compared to radon entering the home through soil, radon entering the home through tap water will be (in most cases) a small source of radon in indoor air. Radon is a known human carcinogen. Breathing air containing radon can lead to lung cancer. Drinking water containing radon may also cause increased risk of stomach cancer. If you are concerned about radon in your home, test the air in your home. Testing is inexpensive and easy. Fix your home if the level of radon in your air is 4 picocuries of radon per liter of air (pCi/l) or higher. There are simple ways to fix a radon problem that aren't too costly. For additional information, call your state radon program or call EPA's Radon Hotline, 800.SOS.RADON."

Secondary Contaminants

Secondary contaminants usually do not have to be reported in the CCR except if their testing is required and is included on your sampling schedule. MassDEP encourages inclusion of secondaries in your report. If any detect is close to the secondary maximum contaminant level (SMCL) it is highly recommended that it be reported in the CCR to inform customers so that they can make informed decision about their health concerns.

Manganese

Manganese is a secondary contaminant that has not had required testing in the past. Starting in 2014 manganese testing is now required and is put on all sampling schedules. Detections of this secondary contaminant must now be reported in the CCR as shown below.

If your system detects manganese greater than 50 ug/L, you must report these concentrations in your CCR tables. For manganese concentrations 300 ug/L and greater you must, in addition to the table, include an educational statement. (See Attachment F for more information and tables.)

You may use the educational statement below or get MassDEP's written approval for alternative CCR language. The educational statement for manganese should explain the significance of the manganese detects and if customers need to be concerned by its presence. The bolded required language in the statement below must be included verbatim in the CCR. Please contact MassDEP if you want to change the suggested, non-mandatory language.

Manganese : Manganese is a naturally occurring mineral found in rocks, soil and groundwater, and surface water. Manganese is necessary for proper nutrition and is part of a healthy diet, but can have undesirable effects on certain sensitive populations at elevated concentrations. The United States Environmental Protection Agency (EPA) and MassDEP have set an aesthetics-based Secondary Maximum Contaminant Level (SMCL) for manganese of 50 ug/L (micrograms per liter), or 50 parts per billion. In addition, MassDEP's Office of Research and Standards (ORS) has set a drinking water guideline for manganese (ORSG), which closely follows the EPA public health advisory for manganese. ***Drinking water may naturally have manganese and, when concentrations are greater than 50 µg/L, the water may be discolored and taste bad. Over a lifetime, the EPA recommends that people drink water with manganese levels less than 300 µg/L and over the short term, EPA recommends that people limit their consumption of water with levels over 1000 ug/L, primarily due to concerns about possible neurological effects. Children up to 1 year of age should not be given water with manganese concentrations over 300 ug/L, nor should formula for infants be made with that water for longer than 10 days.*** *The ORSG differs from the EPA's health advisory because it expands the age group to which a lower manganese concentration applies from children less than 6 months of age to children up to 1 year*

of age to address concerns about children's susceptibility to manganese toxicity. See: EPA Drinking Water Health Advisory for Manganese http://www.epa.gov/safewater/ccl/pdfs/reg_determine1/support_cc1_magnese_dwreport.pdf and MassDEP Office of Research and Standards Guideline (ORSG) for Manganese http://www.mass.gov/eea/agencies/massdep/water/drinking/manganese-in-drinking-water.html."

Compliance with Other Drinking Water Regulations

Violations

If the water system has violated any of the national drinking water regulatory requirements during the reporting period, the CCR must describe the violation(s). This description must include a clear explanation of the violation, any adverse health effects, and steps taken by the system to correct the violation. The following must be included:

- Monitoring and reporting compliance data

- Filtration and disinfection processes
  If the violation was due to a failure to install adequate filtration or disinfection equipment or processes; or there was a failure of that equipment or process, the following language must be included in the CCR:
  "*Inadequately treated water may contain disease-causing organisms. These organisms include bacteria, viruses, and parasites, which can cause symptoms such as nausea, cramps, diarrhea, and associated headaches.*"

- Lead and copper requirements
  If the violation was a failure to meet corrosion control treatment, source water treatment, or lead service requirements, you must include health effects language for lead and copper. See Attachment C.

- Treatment techniques for acrylamide and epichlorohydrin
  If either treatment technique is violated, the appropriate health effects language must be included. See Attachment C.

- Record keeping requirements

- Special monitoring requirements

- Violation of the terms of a variance, an exemption, or an administrative or judicial order

- Report any capacity deficiencies as determined by MassDEP

- Violations
  When an event occurs during the reporting year, which causes a PWS to violate the Surface Water Treatment Rule (SWTR) or any other drinking water standard, that violation must be included in the CCR.

- Any additional information specifically requested by MassDEP

Groundwater Rule (GWR) Public Notifications

Systems that are required to comply with the GWR may have instances where they must put public notification (PN) in their CCR. If the system has an uncorrected significant deficiency notice from MassDEP or if the system has a fecal indicator-positive source (raw) water sample, the PWS must inform their customers of this in their CCR. The system must annually include this information in their CCR until the deficiency is corrected and the fecal contamination is addressed (determined by MassDEP). The following must be included:

- The nature of the significant deficiency or source of fecal contamination (if known)
- Date the deficiency was identified by MassDEP or date the fecal samples were taken.
- Date the fecal contamination had been addressed, if applicable
- MassDEP-approved correction plan if deficiency or contamination was not addressed (which will include interim measures, progress to date, and any interim measures that were completed to date)
- Health effect language for fecal contamination

Most significant deficiencies that were corrected at report time would not have to be reported in the CCR unless you are directed to do so by MassDEP. In such cases you must report the nature of the deficiency, how the deficiency was corrected, and the date of correction.

Revised Total Coliform Rule (RTCR)

Note: RTCR will be mandatory in 2016.
Systems that trigger the requirement to perform a Level 1 assessment or a Level 2 assessment to comply with the RTCR must inform their customers of this in their CCR.

Any system required to comply with the Level 1 assessment requirement or a Level 2 assessment requirement that is **not** due to an *E. coli* MCL violation must include in the report the following text:

> *" Coliforms are bacteria that are naturally present in the environment and are used as an indicator that other, potentially harmful, waterborne pathogens may be present or that a potential pathway exists through which contamination may enter the drinking water distribution system. We found coliforms indicating the need to look for potential problems in water treatment or distribution. When this occurs, we are required to conduct assessment(s) to identify problems and to correct any problems that were found during these assessments."*
>
> For Level 1 assessments add:
> *"During the past year we were required to conduct [insert number] Level 1 assessment(s). [insert number] Level 1 assessment(s) were completed. In addition, we were required to take [insert number] corrective actions and we completed [insert number] of these actions."*
>
> For Level 2 Assessments add:

During the past year, [insert number] Level 2 assessments were required to be completed for our water system. [insert number] Level 2 assessments were completed. In addition, we were required to take [insert number] corrective actions and we completed [insert number] of these actions.

Any system that has failed to complete all the required assessments or correct all identified sanitary defects, is in violation of the treatment technique requirement and must also include one or both of the following statements, as appropriate:

1. *"During the past year we failed to conduct all of the required assessment(s)."*
2. *"During the past year we failed to correct all identified defects that were found during the assessment".*

Any system required to conduct a Level 2 assessment due to an *E. coli* MCL violation must include in the report the following text:

"E. coli are bacteria whose presence indicates that the water may be contaminated with human or animal wastes. Human pathogens in these wastes can cause short-term effects, such as diarrhea, cramps, nausea, headaches, or other symptoms. They may pose a greater health risk for infants, young children, the elderly, and people with severely compromised immune systems. We found E. coli bacteria, indicating the need to look for potential problems in water treatment or distribution. When this occurs, we are required to conduct assessment(s) to identify problems and to correct any problems that were found during these assessments.
"We were required to complete a Level 2 assessment because we found E.coli in our water system. In addition, we were required to take [insert number] corrective actions and we completed [insert number] of these actions."

Any system that has failed to complete the required assessment or correct all identified sanitary defects, is in violation of the treatment technique requirement and must also include one or both of the following statements, as appropriate:

1. *"We failed to conduct the required assessment."*
2. *"We failed to correct all sanitary defects that were identified during the assessment that we conducted."*

If a system detects *E. coli* and has violated the *E. coli* MCL, in addition to completing a table for *E.coli* as found in Attachment C - Regulated Contaminants Chart, the system must include one or more of the following statements to describe any noncompliance, as applicable:

1 *"We had an E. coli-positive repeat sample following a total coliform- positive routine sample."*
2 *"We had a total coliform-positive repeat sample following an E. coli- positive routine sample."*
3 *"We failed to take all required repeat samples following an E. coli- positive routine sample."*
4 *"We failed to test for E. coli when any repeat sample tests positive for total coliform."*

If a system detects *E. coli* and has **not** violated the *E. coli* MCL, in addition to completing a table for *E.coli* as found in Attachment C - Regulated Contaminants Chart, the system may include a statement that explains that although they have detected *E. coli,* they are not in violation of the *E. coli* MCL.

Variances or Exemptions

If the system is operating under a variance or exemption at any time during the reporting year the following must be included:

- An explanation of the variance or exemption
- The date it was issued and reason why it was granted
- A status report on what the system is doing to remedy the problem
- A notice to the public for input on the review or renewal of variance or exemption

Required Educational Information

The CCR must contain the following three statements about drinking water. The first statement is to acknowledge that it is normal to find low levels of some contaminants in drinking water. The second statement explains the vulnerability of some populations to contaminants in drinking water. The third is educational statement about lead in the drinking water.

1. *"Drinking water, including bottled water, may reasonably be expected to contain at least small amounts of some contamination. The presence of contaminants does not necessarily indicate that water poses a health risk. More information about contaminants and potential health effects can be obtained by calling the EPA's Safe Drinking Water Hotline (1-800-426-4791.)"*

2. *"Some people may be more vulnerable to contaminants in drinking water than the general population. Immuno-compromised persons such as persons with cancer undergoing chemotherapy, persons who have undergone organ transplants, people with HIV/AIDS or other immune system disorders, some elderly, and infants can be particularly at risk from infections. These people should seek advice from their health care providers. EPA/CDC guidelines on appropriate means to lessen the risk of infection by Cryptosporidium and other microbial contaminants are available from the Safe Drinking Water Hotline (1-800-426-4791)."*

3. *"If present, elevated levels of lead can cause serious health problems, especially for pregnant women and young children. Lead in drinking water is primarily from materials and components associated with service lines and home plumbing. [NAME OF UTILITY] is responsible for providing high quality drinking water, but cannot control the variety of*

materials used in plumbing components. When your water has been sitting for several hours, you can minimize the potential for lead exposure by flushing your tap for 30 seconds to 2 minutes before using water for drinking or cooking. If you are concerned about lead in your water, you may wish to have your water tested. Information on lead in drinking water, testing methods, and steps you can take to minimize exposure is available from the Safe Drinking Water Hotline or at http://www.epa.gov/safewater/lead."
Note: A system may write its own educational statement, but only with MassDEP approval.

Sources of Drinking Water and Drinking Water Contaminants
Community Water Systems must include information on sources of drinking water, contaminants that may be present in drinking water and reasons for EPA and FDA regulations. The following language can be used, or you may develop your own comparable language. However, some form of the following language is required in the report:

"Sources of drinking water (both tap water and bottled water) include rivers, lakes, streams, ponds, reservoirs, springs, and wells. As water travels over the surface of the land or through the ground, it dissolves naturally-occurring minerals and, in some cases, radioactive material, and can pick up substances resulting from the presence of animals or from human activity.

Contaminants that may be present in source water include:

***Microbial contaminants**, such as viruses and bacteria, may come from sewage treatment plants, septic systems, agricultural livestock operations, and wildlife.*

***Inorganic contaminants,** such as salts and metals, can be naturally-occurring or result from urban storm water runoff, industrial, or domestic wastewater discharges, oil and gas production, mining, and farming.*

***Pesticides and herbicides** may come from a variety of sources such as agriculture, urban storm water runoff, and residential uses.*

***Organic chemical contaminants** include synthetic and volatile organic chemicals that are by-products of industrial processes and petroleum production, and can also come from gas stations, urban storm water runoff, and septic systems.*

***Radioactive contaminants** can be naturally occurring or be the result of oil and gas production, and mining activities.*

In order to ensure that tap water is safe to drink, the Department and EPA prescribe regulations that limit the amount of certain contaminants in water provided by public water systems. FDA and the Massachusetts Department of Public Health regulations establish limits for contaminants in bottled water that must provide the same protection for public health."

Special requirements for arsenic, lead, nitrate, and trihalomethanes

For arsenic, nitrate, lead, and trihalomethanes a special educational statement is required if the water system detected the amounts listed below. The following *(italics)* health statements should be used. Different statements may be used with written permission from MassDEP.

Arsenic above 5 ppb, but at or below 10 ppb:
"While your drinking water meets the standard for arsenic, it does contain low levels of arsenic. EPA's standard balances the current understanding of arsenic's possible health effects against the costs of removing arsenic from drinking water. EPA continues to research the health effects of low levels of arsenic, which is a mineral known to cause cancer in humans at high concentrations and is linked to other health effects such as skin damage and circulatory problems."

Arsenic above 10 ppb:
A community water system that detects arsenic above 10 ppb is out of compliance with the MCL and must inform the reader of the violation and include the health effects language.
"Some people who drink water containing arsenic in excess of the MCL over many years could experience skin damage or problems with their circulatory system, and may have an increased risk of getting cancer."

Nitrate above 5 ppm (50% of the MCL), but below the MCL of 10 ppm:
"*Nitrate in drinking water at levels above 10 ppm is a health risk for infants of less than six months of age. High nitrate levels in drinking water can cause blue baby syndrome. Nitrate levels may rise quickly for short periods of time because of rainfall or agricultural activity. If you are caring for an infant, you should ask for advice from your health care provider."*

Total Trihalomethanes (TTHMs) detected above the MCL of 0.080 mg/l as an annual average (monitored and calculated under the provisions of 310 CMR22.07 must include the following health effects language:
"Some people who drink water containing trihalomethanes in excess of the MCL over many years experience problems with their liver, kidneys, or central nervous systems. They may have a greater risk of getting cancer."

Recommended Additions to CCR

MassDEP recommends this additional information be added to you CCR:

- Information on water fluoridation
  Fluoride occurs naturally in all water supplies in trace amounts. In many Massachusetts communities the fluoride level is adjusted to about one part per million (ppm or mg/l) so that it is optimal for better oral health. At this level, it is safe, odorless, colorless, and tasteless. In 1951, the first Massachusetts communities became fluoridated. There are

now over 3.9 million people in 140 Massachusetts communities and 184 million people in the United States who receive the health and economic benefits of fluoridation.

- Information on source treatment

- Use of a template
  Attachment B lists templates that can be used to assist in the preparing and designing of the CCR. Systems will have to enter their own monitoring data into the formatted report, and any additional MCL, MRDL, and/or health effects information.

Report Delivery

All community water systems must deliver a copy of their CCR to every customer and make good faith efforts to get reports to non-billed consumers. The CCR must be **received** by July 1st of each year.

Send two copies to MassDEP (1 copy to the Boston office and 1 copy to your regional office) by the same deadline. Submit the completed and signed certification form to both MassDEP offices with your CCR showing that the report was distributed, and that its information is correct and consistent with the compliance monitoring data submitted to MassDEP during the report year. See Attachment A for the certification form. For systems that are required to publish their CCR in a different language that translated CCR must also be sent to MassDEP.
(See section below for details on the electronic delivery option.)

The CCR contains vital information that local boards of health would be interested in reviewing. Therefore, community public water systems are required to deliver a copy of the CCR to the local board of health office and the Massachusetts Department of Public Health by July 1st of each year.

Because many customers of public water systems, such as apartment dwellers, may not receive a bill, it is the public water system's responsibility to make a good faith effort to reach these consumers. Community public water systems with non-bill paying customers are required to do at least three of the following:

- Post report in the lobby of apartment complexes continually until a new report comes out.

- Place an ad in a local newspaper stating copies are available from the Community Water System.

- Announce on local radio or television stations

- Post CCR in town or city halls

- Place copies of the CCR in the local public library closest to your facility

- Post a notice in main lobby of apartment complexes stating that the CCR is posted on a website, and give the Internet address (URL). Keep this notice continually posted year-round.

- Publish the report in local newspaper(s)

- Publish the report on-line continually until a new report is ready to be posted.

- Deliver the report to community organizations with instructions on who to deliver it to.

Systems serving greater than 100,000 persons
A CCR must be posted on the Internet and kept posted the entire year until a new report is ready to be posted. Use the water system or local town web page to post the report. Be sure to include the web address in the CCR.

Systems serving fewer than 10,000 persons
The Commissioner of MassDEP has approved a mailing waiver allowing systems to mail the CCR to all customers or print the CCR in its entirety in a local newspaper(s). With e-delivery now an option, it may be more cost effective to utilize that method.

Systems serving fewer than 500 persons
The CCR does not have to be mailed or published in a newspaper. However, the system must notify customers through mail or post a notice in a local newspaper. State that the CCR is available from the system and include a contact telephone number. With e-delivery now an option, it may be more cost effective to utilize that method.

Where to Send Your Report

By July 1 of each year, public water systems are required to send a set of copies i.e., the CCR and certification form (Attachment A) to MassDEP, the local board of health, and the Department of Public Health. (Make sure you send all the required attachments to the MassDEP offices in addition to your CCR and Certification form.)

- **Send 1 set to MassDEP Boston**
  MassDEP
  Drinking Water Program or email to Program.Director-DWP@state.ma.us
  One Winter Street - 5th floor
  Boston, MA 02108
  671-292-5770

  Send 1 set to your MassDEP regional office If you emailed to Boston you do not need to send this 2nd hardcopy to your regional office. All MassDEP offices will be able to access e-CCRs.

MassDEP Western Regional Office
State House West, 5th Floor
436 Dwight Street
Springfield, MA 01103
413-784-1100

MassDEP Central Regional Office
Drinking Water Program
8 New Bond St
Worcester, MA 01606
508-792-7650

MassDEP Northeast Region
Drinking Water Program
205B Lowell St.
Wilmington, MA 01887
978-694-3200

MassDEP Southeast Region
Drinking Water Program
20 Riverside Drive
Lakeville, MA 02347
508-946-2700

- **Send 1 set to your local board of health**

Check with your board as to whether they will accept emails or hardcopies.

- **Send 1 set to:**

Massachusetts Department of Public Health
Bureau of Environmental Health
250 Washington Street
Boston, MA 02108-4619
212-624-6000

or email to
dph.ccr@massmail.state.ma.us

Electronic Delivery of CCRs

On January 3, 2013, US EPA interpreted the existing federal regulations pertaining to direct delivery of CCRs as allowing several options for electronic delivery (e-delivery). No changes were made to the CCR regulation. Community PWSs must continue to meet all the same requirements (e.g. content, Good Faith Efforts to reach non-bill paying consumers, foreign language, certification, etc.). Please note that e-delivery is optional. Systems may choose to continue past delivery methods including regular mail, door-to-door delivery or posting in an appropriate location (when approved).

For public water systems that intend to use e-delivery, the following information is applicable:

- Community PWSs must prominently display a message informing their customers of the option of obtaining a hardcopy CCR and how they can do so.
- Community PWSs may e-deliver via a mailed post card, bill stuffer, or other notice that includes a direct URL (i.e. web address), an email that contains a direct URL, or an email that contains the full CCR as part of the message (either as an attachment or as an embedded image). Any other e-delivery method must be approved by MassDEP prior to its use. URLs must open directly to the CCR without the need to browse/click to other web pages.
- All CCRs must be delivered to customers by July 1 of each year. If an email method is used and it is undeliverable for any reason a paper CCR must be mailed to that customer by July 1.
- The CCR URL must be kept live until the next year's CCR is issued.

- Use the updated CCR certification form which includes e-delivery options. All Community PWSs must use this new form starting with the report due July 1, 2013.
- Community PWSs may e-deliver the CCR, Certification Form, and any other subordinating documents to MassDEP at (program.director-dwp@state.ma.us) and Mass DPH (dph.ccr@massmail.state.ma.us). The certification form must be signed and put into PDF format. The CCR and other documents must be included in the same PDF. Multiple PDFs, word docs, etc. will not be accepted. If a URL was used it must be submitted along with the PDF of the CCR and Cert Form. (Naming the file "1234567 System Name 2103 CCR" would be most helpful.)
- Contact your local board of health to see if they will accept their copy via email.
- Social media (e.g., Twitter, Facebook) and automated phone calls do not meet the direct delivery requirement but can be used to meet Good Faith Effort requirements.

The EPA memorandum can be found on our website at: http://www.mass.gov/eea/agencies/massdep/water/drinking/water-systems-ops.html#7. Systems without internet access or who are unable to download this memorandum can obtain a hardcopy by contacting the MassDEP staff listed at the end of this letter. MassDEP strongly recommends that all systems read the EPA memorandum as it covers issues for consideration, provides helpful examples and expands on the helpful information below:

Good Faith Efforts and Postal Patron Mailings

Community PWSs must mail or otherwise directly deliver a CCR to all "customers," defined as bill-paying consumers. Community PWSs must also make three Good Faith Efforts to reach the non-billed consumers. Mailing out CCRs to the postal patrons in a PWS service area will reach more people than mailing to bill-paying customers, but it has its limitations. Postal patrons may not include people who work in the service area but live in a different one. If a system decides to use a postal patron mailing, they are still required to do three additional Good Faith Efforts.

Combinations of Delivery Methods

In order to reach all customers Community PWSs will likely have to use a combination of e-delivery and mailed paper copies. Some customers prefer a hardcopy version and some will not have internet access. Both the hardcopy and the e-copy must have all the required information in them. The e-copy allows the PWS to include additional information and can include links to this extra information. If the e-copy CCR is different from the hardcopy CCR both must be sent to MassDEP for review along with your delivery certification.

Web Content

Community PWSs that post their CCR to a web page must have the site live as soon as the URL is delivered to its customers. MassDEP will require that this site remain active until the next year's CCR is delivered. PWSs must keep copies of the most recent three years of CCRs; make sure when you upload a new CCR that the previous CCRs are archived properly, either online or as hardcopies in your files. Try to make the URL as clear and distinct as possible; avoid characters that could easily be confused such as the number zero and the letter O or the capital letter L, the lower case letter l, and the number 1. There are many URL-shortening services out on the internet. PWSs may use these services but do so at their own risk as these links can be broken or spam filters may prevent their delivery. A PWS will be noncompliant with the CCR regulation if their URL is disabled. If a system uses a web site to comply with the direct delivery requirement, that effort cannot also be counted as a Good Faith Effort.

Public Notice and e-Delivery
A CCR that includes a Tier 3 Public Notice may use e-delivery. All other Public Notices must follow existing delivery requirements and e-delivery is not permitted.

More Information

Community public water systems are the main source of distribution for CCRs and are required to keep copies of CCR on file for no less than three years and provide copies upon request.

Visit these websites for templates and more information.

http://www.mass.gov/eea/agencies/massdep/water/drinking/water-systems-ops.html#7 MassDEP Website

www.epa.gov/ogwdw	Environmental Protection Agency Website
www.awwa.org	American Water Works Association
www.newwa.org	New England Water Works Association
www.rcap.org	Rural Community Assistance Program

For more information contact the EPA Safe Drinking Water Hotline: 800-426-4791

For a guide to making your CCR more user-friendly visit the MassDEP website and refer to the MassDEP booklet "Recommended Tips to provide a more user friendly CCR"

Non Community Public Water Systems

Non-community public water systems are required to post their Annual Drinking Water Quality Report (commonly referred to as the non-community CCR) when one is provided by MassDEP. This report must be posted in a conspicuous location specified by MassDEP. The report must remain posted until MassDEP provides a new annual report.

Ground Water Rule
There are new requirements (the Groundwater Rule) for non-community systems which use ground water as their sole source, that pertain to the CCR.

In an event that MassDEP finds a significant deficiency in a water system, in addition to the regular public notification requirements needed, a non-community system may need to include the public information in their CCR.

Any significant deficiency found by MassDEP that has not been corrected by the system within 12 months of notification (or earlier if directed by MassDEP), must be made public in the CCR. The system must include this public information in every annual CCR until the problem is corrected.

Information must include:

1. The nature of the deficiency

2. The date MassDEP identified the deficiency

3. The MassDEP-approved plan to correct the deficiency

    a. Schedule for correcting the deficiencies

    b. Any interim measures being taken

    c. Progress to date

    d. Any interim measures that were completed to date

4. Non-community systems with large number of non-English speaking consumers (as determined by MassDEP) must have an informational statement in the respective native language stating the importance of the getting the report translated or who to contact in the system for a translated copy of the report.

5. If directed by MassDEP, a non-community system with significant deficiencies that have been corrected must inform the consumers:

    a. What the deficiencies are

    b. How the deficiencies were corrected

    c. Dates of the corrections

Contact your regional MassDEP CCR contact if you need more information on this subject.

List of Attachments

Attachment A: Consumer Confidence Report Certification Form

Attachment B: List of Consumer Confidence Help Aides

Attachment C: Regulated Contaminants Chart

Attachment D: Unregulated Contaminants Chart

Attachment E: Secondary Contaminant Chart

Attachment F: Interpreting Monitoring Data - Tables

Attachment G: Treatment Techniques

Attachment H: Sample SWAP Language for your CCR

Attachment I: Sample Cross Connection Language

Attachment J: Use of Environmentally Friendly Materials

Attachment K: Language Requirements for the CCR

Attachment L: Preparing for Your Report

Attachment M: Compliance Checklist for Your CCR

Attachment N: Request for Language Changes

Attachment O: Sample CCR

Massachusetts Department of Environmental Protection
Bureau of Resource Protection – Drinking Water Program

Consumer Confidence Report Certification

For calendar year _____

A. PWS Information

Important: When filling out forms on the computer, use only the tab key to move your cursor - do not use the return key.

PWS Name

City /Town

The community water system named above hereby certifies that its Consumer Confidence Report (CCR) was distributed to customers, appropriate agencies, and notices of availability have been given in compliance with 310 CMR 22.16A. Furthermore, the system certifies that the information contained in the report is correct and consistent with the compliance monitoring data previously submitted to MassDEP.

I certify under penalty of law that I am the person authorized to fill out this form and the information contained herein is true, accurate, and complete to the best of my knowledge and belief.

PWS ID#

Name

Title

Phone #

Date

Signature of Owner/Responsible Party or Certified Operator

B. Public Notice Certification

CCR delivery by newspaper or postings does not meet PN requirements. PN must be directly delivered (by hand, land, electronic).

Is this system using this CCR to provide **Tier 3** Public Notice? ☐ Yes ☐ No

_____ Consultation date with MassDEP

_____ Name the Violation

The PN can be found on page _____ paragraph _____ of the CCR.

_____ Date violation occurred

☐ I am reporting multiple Tier 3 PNs. I have listed the additional PN information on page 3 of this form.

The public water system indicated above hereby affirms that a Tier 3 public notice has been provided within this CCR to consumers in accordance with 310 CMR 22.16(4) including: delivery, content, format requirements, notification deadlines, and that the public water system will meet future requirements for notifying new billing units and new customers of the violation.

C. For Systems Selling Water to Other Community Water Systems

If you did not sell water to another community PWS skip Section C.

☐ My system delivered the applicable information required at 310 CMR 22.16A(4), to the buying system(s) no later than April 1st of this year, or by the mutually agreed upon date specifically included in a written contract between the parties.

D. Consumer Delivery Methods – Based on Population Served

ALL distribution (posting, land or e-delivery, publication, and good faith efforts) must be completed on or before July 1st. When July 1st lands on a weekend or holiday, delivery must be completed earlier to meet the deadline.

When email is used for delivery, any returned emails must be redelivered by land

For systems serving fewer than 500 persons:
(Choose #1 or #2)

_____ Date of delivery/publication

☐ 1. My system used one or more of the following methods to notify customers that the CCR would **not** be mailed directly to them and is available to them upon request. (A copy of the notice is attached).

☐ Land mail ☐ Door-to-door ☐ Newspaper ☐ eMail ☐ Post notices

Locations of posted notices

☐ 2. My system provided a copy of the CCR to each customer by one of six of the following methods:

☐ Published the full CCR in a local newspaper (a copy of the published report is attached).

☐ Land mailed or hand-delivered the CCR to consumers.

delivery ideally within 3 days but before July 1.

☐ eMailed with PDF of CCR ☐ eMailed with embedded CCR

☐ Land mailed or ☐ eMailed a notice of availability of the CCR with a direct URL

List URL

Instructions for customers to request a hard copy must also be included in e-delivery.

For systems serving between 500 and 9,999 persons:
(Choose #1 or #2)

Date of delivery/publication

☐ 1. My system provided a copy of the CCR to each customer by
☐ Land mail ☐ eMail with PDF ☐ eMail with embedded CCR

☐ Land mailed or ☐ eMailed a notice of availability of the CCR with a direct URL

When a URL is used it must be a direct link.

List the URL if used.

☐ 2.My system provided the CCR to each customer by publishing the full report in a newspaper (a copy of the published CCR is attached) and provided notice to consumers of this action by either:
☐ Published a notice of this in a local newspaper
☐ Land mailed a notice of this to consumers.
☐ e-Mailed a notice of this to consumers.

For systems serving 10,000 or more persons:

Date of delivery/publication

☐ My system provided a copy of the CCR to each customer by:

☐ Land mail ☐ eMail with PDF ☐ e-Mail with embedded CCR
☐ Land mailed or ☐ eMailed a notice of availability of the CCR with a direct URL

List the URL if used.

☐ In addition to one of the delivery methods checked above, my system serves greater than 100,000 persons and, as required, has posted the CCR on a publicly accessible Internet site:
www.
List the URL used

E. Good Faith Delivery Methods **(minimum of 3 is required)**

To reach people who drink our water but are not billed customers the following were conducted in addition to the required delivery:

☐ Posted the CCR on a publicly accessible Internet site at the following address. (Only for systems under 100,000 population who did not use this method as their primary method)
www.
List the URL used.

☐ Mailed the CCR to all postal patrons within the service area (list of zip codes used is attached).

☐ Mailed a postcard listing the URL where the CCR can be found, to all postal patrons within the service area (list of zip codes used is attached).

www.
List the URL used.

☐ Advertised availability of the CCR in the following news media (a copy of the announcement is attached): ☐ Radio ☐ Newspaper ☐ Television / cable ☐ Social media ☐Digital signboard

☐ Published the CCR in local newspaper (a copy of the published CCR is attached).

☐ Posted the CCR in public places i.e., post office, town hall, library (a list of locations is attached).

☐ Delivered multiple CCR copies to single-bill addresses serving several persons i.e., apartments, businesses, large private employers (a list of locations is attached).

☐ Delivered multiple CCR copies to community organizations (A list of organizations is attached.)

☐ Posted the CCR or a notice of availability in the lobby of apartment complexes (list of the locations is attached).

☐ _____
Other

All systems must complete all 4

F. Mandatory Agency Delivery Requirements

☐ 1. Delivered 1 copy of CCR and the Certification Form to local board of health. (Contact your board of health as to whether they would prefer land or e-delivery of CCR.) _____ Date completed

Agencies and consumers must **receive** CCR on or before July 1.

☐ 2. Delivered 1-copy of CCR and the Certification Form to MA Dept. of Public Health. _____ Date completed
- ☐ Hardcopy to: 250 Washington St.; Boston, MA 02108 or
- ☐ PDF e-delivered to: dph.ccr@massmail.state.ma.us

☐ 3. Delivered 1-copy of CCR, the Certification Form, and **all** the attachments check-marked in this form to MassDEP Boston Office at: _____ Date completed
- ☐ Hardcopy to: CCR Program, 1 Winter St. -5th Fl.; Boston, MA 02108 or
- ☐ PDF e-delivered to: Program.Director-DWP@state.ma.us. Type "CCR" in subject line.

☐ 4. Delivered 1-copy of CCR, the Certification Form, and **all** the attachments check-marked in this form to the your MassDEP regional office at: _____ Date completed

*Only one email is necessary. If the CCR is e-delivered to the Boston office it will also be accessible to the regional office as well. No need to e-deliver to regional office.

- ☐ Hardcopy to: MassDEP-WERO; Statehouse West 4th Floor; 436 Dwight Street.; Springfield, MA 01103 or
- ☐ e-delivered to the above MassDEP Boston email address*

- ☐ Hardcopy to: MassDEP-CERO; 627 Main St.; Worcester, MA 01608 or
- ☐ e-delivered to the above MassDEP Boston email address*

- ☐ Hardcopy to: MassDEP-NERO; 205-B Lowell St.; Wilmington, MA 01887 or
- ☐ e-delivered to the above MassDEP Boston email address*

- ☐ Hardcopy to: MassDEP-SERO; 20 Riverside Dr.; Lakeville, MA 02347 or
- ☐ e-delivered to the above MassDEP Boston email address*

Att. B - List of Consumer Confidence Report Help Aids

MassDEP encourages systems to use a template whenever possible in order to simplify reports.

MassDEP, Drinking Water Program, developed a template to assist water systems complete their CCR. This template has clear instructions and may be downloaded by the user. This template is free of charge and can be found on our website at: http://www.mass.gov/eea/docs/dep/water/drinking/alpha/a-thru-h/ccrtempl.pdf

You may also contact the regional offices for support:
NERO – Hilary Jean 978-694-3229 Hilary.Jean@state.ma.us
CERO – Liz Kotowski 508-767-2779 Elizabeth.Kotowski@state.ma.us
WERO – Rick Larson 413-755-2207 Richard.Larson@state.ma.us
SERO – Courtland Ridings 508-946-2722 Courtland.Ridings@state.ma.us

Att. C - Regulated Contaminants Chart

Key

AL=Action Level
MCL=Maximum Contaminant Level
MCLG=Maximum Contaminant Level Goal
MFL=Million Fibers per Liter
MRDL=Maximum Residual Disinfectant Level
MRDLG=Maximum Residual Disinfectant Level Goal
mrem/year=millirems per year (a measure of radiation absorbed by the body)
NTU=Nephelometric Turbidity Units
pCi/l=picocuries per liter (a measure of radioactivity)
ppm=parts per million, or milligrams per liter (mg/l)
ppb=parts per billion, or micrograms per liter (ug/l)
ppt=parts per trillion, or nanograms per liter
ppq=parts per quadrillion, or picograms per liter
TT=Treatment Technique

Contaminant	Traditional MCL	To convert for CCR, multiply by	MCL in CCR units	MCLG in CCR units	Major Sources in Drinking Water	Health Effects Language
Microbiological Contaminants						
1. *Cryptosporidium*	TT	-	TT	0	Discharged especially where water is contaminated with sewage or animal wastes	Some people who drink water containing *Cryptosporidium* could experience severe gastrointestinal effects.
2. *Giardia lamblia*	TT	-	TT	0	Discharged especially where water is contaminated with sewage or animal wastes	Some people who drink water containing *Giardia lamblia* could experience severe gastrointestinal effects.
3. Heterotrophic plate count	TT	-	TT	n/a	Heterotrophic plate count is an indicator method that measures a range of naturally-occurring bacteria in the environment	Heterotrophic plate count is not associated with health effects but is a method that measures the bacterial quality of the water as an indicator of the adequacy of water treatment.
4. *Legionella*	TT	-	TT	0	Natural sources; multiplies in heating and air-conditioning systems.	Some people who use drinking water containing *Legionella* could experience Legionnaire's Disease, a type of pneumonia.

Contaminant	Traditional MCL	To convert for CCR, multiply by	MCL in CCR units	MCLG in CCR units	Major Sources in Drinking Water	Health Effects Language
5. Total Coliform Bacteria	*6. TT TT*	*na*		*7. n a*	*8. Naturally present in the environment*	*9. Coliforms are bacteria that are naturally present in the environment and are used as an indicator that other, potentially harmful, waterborne pathogens may be present or that a potential pathway exists through which contamination may enter the drinking water distribution system. We found coliforms indicating the need to look for potential problems in water treatment or distribution. When this occurs, we are required to conduct assessment(s) to identify problems and to correct any problems that were found during these assessments.*
E.coli	Routine and repeat samples are total coliorm-positive and either is *E. coli*-positive or system fails to take repeat samples following *E. coli*-positive routine sample or system fails to analyze total coliform- positive repeat sample for *E. col*			0	Human and animal fecal waste.	*E. coli* are bacteria whose presence indicates that the water may be contaminated with human or animal wastes. Human pathogens in these wastes can cause short-term effects, such as diarrhea, cramps, nausea, headaches, or other symptoms. They may pose a greater health risk for infants, young children, the elderly, and people with severely compromised immune systems.
7. Fecal Indicators (*E. coli*, enterococci, or coliphage) Groundwater Rule	TT	-	TT	n/a	Human and animal fecal waste	Fecal indicators are microbes whose presence indicates that the water may be contaminated with human or animal wastes. Microbes in these wastes can cause short-term health effects, such as diarrhea, cramps, nausea, headaches, or other symptoms. They may pose a special health risk for infants, young children, some of the elderly, and people with severely compromised immune systems.

Contaminant	Traditional MCL	To convert for CCR, multiply by	MCL in CCR units	MCLG in CCR units	Major Sources in Drinking Water	Health Effects Language
8. Total organic carbon	TT	-	TT	n/a	Naturally present in the environment	Total organic carbon (TOC) has no health effects. However, total organic carbon provides a medium for the formation of disinfection by products. These byproducts include trihalomethanes (THMs) and haloacetic acids (HAAs). Drinking water containing these byproducts in excess of the MCL may lead to adverse health effects, liver or kidney problems, or nervous system effects, and may lead to an increase risk of getting cancer.
9. Turbidity	TT	-	TT	n/a	Soil runoff	Turbidity has no health effects. However, turbidity can interfere with disinfection and provide a medium for microbial growth. Turbidity may indicate the presence of disease-causing organisms. These organisms include bacteria, viruses, and parasites that can cause symptoms such as nausea, cramps, diarrhea, and associated headaches.
10. Viruses (enteric)	TT	-	TT	0	Discharged especially where water is contaminated with sewage or animal wastes	Some people who drink water containing viruses could experience severe gastrointestinal effects.
Radioactive Contaminants						
11. Beta/photon emitters	4 mrem/yr	-	4 mrem/yr	0	Decay of natural and man-made deposits	Certain minerals are radioactive and may emit forms of radiation known as photons and beta radiation. Some people who drink water containing beta and photon emitters in excess of the MCL over many years may have an increased risk of getting cancer.
12. Alpha emitters	15 pCi/l	-	15 pCi/l	0	Erosion of natural deposits	Certain minerals are radioactive and may emit a form of radiation known as alpha radiation. Some people who drink water containing alpha emitters in excess of the MCL over many years may have an increased risk of getting cancer.
13. Combined radium	5 pCi/l	-	5 pCi/l	0	Erosion of natural deposits	Some people who drink water containing radium 226 or 228 in excess of the MCL over many years may have an increased risk of getting cancer

Contaminant	Traditional MCL	To convert for CCR, multiply by	MCL in CCR units	MCLG in CCR units	Major Sources in Drinking Water	Health Effects Language
14. Uranium	0.030 mg/l	1000	30 ppb*	0	Erosion of natural deposits	Some people who drink water containing uranium in excess of the MCL over many years may have an increased risk of getting cancer and kidney toxicity
* To convert pCi/L to ppb: pCi/L uranium x 1.49 = ppb uranium						
Inorganic Contaminants						
15. Antimony	0.006 mg/l	1000	6 ppb	6 ppb	Discharge from fire retardants; ceramics; electronics; solder	Some people who drink water containing antimony well in excess of the MCL over many years could experience increases in blood cholesterol and decreases in blood sugar.
16. Arsenic	0.01 mg/l[1]	1000	10 ppb	n/a	Erosion of natural deposits; Runoff from orchards; Runoff from glass and electronics production wastes	Some people who drink water containing arsenic in excess of the MCL over many years could experience skin damage or problems with their circulatory system, and may have an increased risk of getting cancer.
17. Asbestos	7 MFL	-	7 MFL	7 MFL	Decay of asbestos cement water mains; Erosion of natural deposits	Some people who drink water containing asbestos in excess of the MCL over many years may have an increased risk of developing benign intestinal polyps.
18. Barium	2 mg/l	-	2 ppm	2 ppm	Discharge of drilling wastes; Discharge from metal refineries; Erosion of natural deposits	Some people who drink water containing barium in excess of the MCL over many years could experience an increase in their blood pressure.
19. Beryllium	0.004 mg/l	1000	4 ppb	4 ppb	Discharge from electrical, aerospace, and defense industries; erosion of natural deposits	Some people who drink water containing beryllium well in excess of the MCL over many years could develop intestinal lesions.

[1] The arsenic MCL was 0.05 mg/l prior to January 23, 2006.

Contaminant	Traditional MCL	To convert for CCR, multiply by	MCL in CCR units	MCLG in CCR units	Major Sources in Drinking Water	Health Effects Language
20. Bromate	0.010 mg/l	1000	10 ppb	0	By-product of drinking water disinfection	Some people who drink water containing bromate in excess of the MCL over many years have an increased risk of getting cancer.
21. Cadmium	0.005 mg/l	1000	5 ppb	5 ppb	Corrosion of galvanized pipes; Erosion of natural deposits; Discharge from metal refineries; Runoff from waste batteries and paints	Some people who drink water containing cadmium in excess of the MCL over many years could experience kidney damage.
22. Chloramines	MRDL= 4 mg/l	-	MRDL= 4 ppm	MRDLG= 4 ppm	Water additive used to control microbes	Some people who use water containing chloramines well in excess of the MRDL could experience irritating effects to their eyes and nose. Some people who drink water containing chloramines well in excess of the MRDL could experience stomach discomfort or anemia.
23. Chlorine	MRDL= 4 mg/l	-	MRDL= 4 ppm	MRDLG= 4 ppm	Water additive used to control microbes	Some people who use water containing chlorine well in excess of the MRDL could experience irritating effects to their eyes and nose. Some people who drink water containing chlorine well in excess of the MRDL could experience stomach discomfort.
24. Chlorine dioxide	MRDL= 0 .8 mg/l	1000	800 ppb	MRDLG= 800 ppb	Water additive used to control microbes	Some infants and young children who drink water containing chlorine dioxide in excess of the MRDL could experience nervous system effects. Similar effects may occur in fetuses of pregnant women who drink water containing chlorine dioxide in excess of the MRDL. Some people may experience anemia.
25. Chlorite	1 mg/l	-	1 ppm	0.8 ppm	By-product of drinking water disinfection	Some infants and young children who drink water containing chlorite in excess of the MCL could experience nervous system effects. Similar effects may occur in fetuses of pregnant women who drink water containing chlorite in excess of the MCL. Some people may experience anemia.
26. Chromium	0.1 mg/l	1000	100 ppb	100 ppb	Discharge from steel and pulp mills; Erosion of natural deposits	Some people who use water containing chromium well in excess of the MCL over many years could experience allergic dermatitis.

Contaminant	Traditional MCL	To convert for CCR, multiply by	MCL in CCR units	MCLG in CCR units	Major Sources in Drinking Water	Health Effects Language
27. Copper	AL=1.3 mg/l	-	AL= 1.3 ppm	1.3 ppm	Corrosion of household plumbing systems; Erosion of natural deposits; Leaching from wood preservatives	Copper is an essential nutrient, but some people who drink water containing copper in excess of the action level over a relatively short amount of time could experience gastrointestinal distress. Some people who drink water containing copper in excess of the action level over many years could suffer liver or kidney damage. People with Wilson's Disease should consult their personal doctor.
28. Cyanide	0.2 mg/l	1000	200 ppb	200 ppb	Discharge from metal factories; Discharge from plastic and fertilizer factories	Some people who drink water containing cyanide well in excess of the MCL over many years could experience nerve damage or problems with their thyroid.
29. Fluoride[2]	4 mg/l	-	4 ppm	4 ppm	Erosion of natural deposits; Water additive which promotes strong teeth; Discharge from fertilizer and aluminum factories	Some people who drink water containing fluoride in excess of the MCL over many years could get bone disease, including pain and tenderness of the bones. Children may get mottled teeth.
30. Lead	AL= 0.015 mg/l	1000	AL=15 ppb	0	Corrosion of household plumbing systems; Erosion of natural deposits	Infants and children who drink water containing lead in excess of the action level could experience delays in their physical or mental development. Children could show slight deficits in attention span and learning abilities. Adults who drink this water over many years could develop kidney problems or high blood pressure.
31. Mercury [inorganic]	0.002 mg/l	1000	2 ppb	2 ppb	Erosion of natural deposits; Discharge from refineries and factories; Runoff from landfills; Runoff from cropland	Some people who drink water containing inorganic mercury well in excess of the MCL over many years could experience kidney damage.
32. Nitrate	10 mg/l	-	10 ppm	10 ppm	Runoff from fertilizer use; Leaching from septic tanks, sewage; Erosion of natural deposits	Infants below the age of six months who drink water containing nitrate in excess of the MCL could become seriously ill and, if untreated, may die. Symptoms include shortness of breath and blue baby syndrome.

[2] Add this footnote to your table: Fluoride has a secondary contaminant level (SMCL) of 2 ppm to better protect human health.

Contaminant	Traditional MCL	To convert for CCR, multiply by	MCL in CCR units	MCLG in CCR units	Major Sources in Drinking Water	Health Effects Language
33. Nitrite	1 mg/l	-	1 ppm	1 ppm	Runoff from fertilizer use; Leaching from septic tanks, sewage; Erosion of natural deposits	Infants below the age of six months who drink water containing nitrite in excess of the MCL could become seriously ill and, if untreated, may die. Symptoms include shortness of breath and blue baby syndrome.
34. Perchlorate	0.002 mg/l	1000	2 ppb	N/A	Rocket propellants, fireworks, munitions, flares, blasting agents	Perchlorate interferes with the normal function of the thyroid gland and thus has the potential to affect growth and development, causing brain damage and other adverse effects, particularly in fetuses and infants. Pregnant women, the fetus, infants, children up to the age of 12, and people with a hypothyroid condition are particularly susceptible to perchlorate toxicity.
35. Selenium	0.05 mg/l	1000	50 ppb	50 ppb	Discharge from metal refineries; Erosion of natural deposits; Discharge from mines	Selenium is an essential nutrient. However, some people who drink water containing selenium in excess of the MCL over many years could experience hair or fingernail losses, numbness in fingers or toes, or problems with their circulation.
36. Thallium	0.002 mg/l	1000	2 ppb	0.5 ppb	Leaching from ore-processing sites; Discharge from electronics, glass, and drug factories	Some people who drink water containing thallium in excess of the MCL over many years could experience hair loss, changes in their blood, or problems with their kidneys, intestines, or liver.
Synthetic Organic Contaminants Including Pesticides and Herbicides						
37. 2,4-D (ppb)	0.07 mg/l	1000	70 ppb	70 ppb	Runoff from herbicide used on row crops	Some people who drink water containing the weed killer 2,4-D well in excess of the MCL over many years could experience problems with their kidneys, liver, or adrenal glands.
38. 2,4,5-TP [Silvex]	0.05 mg/l	1000	50 ppb	50 ppb	Residue of banned herbicide	Some people who drink water containing silvex in excess of the MCL over many years could experience liver problems.

Contaminant	Traditional MCL	To convert for CCR, multiply by	MCL in CCR units	MCLG in CCR units	Major Sources in Drinking Water	Health Effects Language
39. Acrylamide	TT	-	TT	0	Added to water during sewage/ wastewater treatment	Some people who drink water containing high levels of acrylamide over a long period of time could have problems with their nervous system or blood, and may have an increased risk of getting cancer.
40. Alachlor	0.002 mg/l	1000	2 ppb	0	Runoff from herbicide used on row crops	Some people who drink water containing alachlor in excess of the MCL over many years could have problems with their eyes, liver, kidneys, or spleen, or experience anemia, and may have an increased risk of getting cancer.
41. Atrazine	0.003 mg/l	1000	3 ppb	3 ppb	Runoff from herbicide used on row crops	Some people who drink water containing atrazine well in excess of the MCL over many years could experience problems with their cardiovascular system or reproductive difficulties.
42. Benzo(a)pyrene [PAH]	0.0002 mg/l	1,000,000	200 ppt	0	Leaching from linings of water storage tanks and distribution lines	Some people who drink water containing benzo(a)pyrene in excess of the MCL over many years may experience reproductive difficulties and may have an increased risk of getting cancer.
43. Carbofuran (ppb)	.04 mg/l	1000	40 ppb	40 ppb	Leaching of soil fumigant used on rice and alfalfa	Some people who drink water containing carbofuran in excess of the MCL over many years could experience problems with their blood, or nervous or reproductive systems.
44. Chlordane	0.002 mg/l	1000	2 ppb	0	Residue of banned termiticide	Some people who drink water containing chlordane in excess of the MCL over many years could experience problems with their liver or nervous system, and may have an increased risk of getting cancer.
45. Dalapon	0.2 mg/l	1000	200 ppb	200 ppb	Runoff from herbicide used on rights of way	Some people who drink water containing dalapon well in excess of the MCL over many years could experience minor kidney changes.
46. Di(2-ethylhexyl) adipate	0.4 mg/l	1000	400 ppb	400 ppb	Discharge from chemical facto-ries	Some people who drink water containing di (2-ethylhexyl) adipate well in excess of the MCL over many years could experience toxic effects such as weight loss, liver enlargement, or possible reproductive difficulties.

Contaminant	Traditional MCL	To convert for CCR, multiply by	MCL in CCR units	MCLG in CCR units	Major Sources in Drinking Water	Health Effects Language
47. Di(2-ethylhexyl) phthalate	0.006 mg/l	1000	6 ppb	0	Discharge from rubber and chemical factories	Some people who drink water containing di (2-ethylhexyl) phthalate well in excess of the MCL over many years may have problems with their liver, or experience reproductive difficulties, and may have an increased risk of getting cancer.
48. Dibromochloropropane (DBCP)	0.0002 mg/l	1,000,000	200 ppt	0	Runoff/leaching from soil fumigant used on soybeans, cotton, and orchards	Some people who drink water containing DBCP in excess of the MCL over many years could experience reproductive problems and may have an increased risk of getting cancer.
49. Dinoseb	0.007 mg/l	1000	7 ppb	7 ppb	Runoff from herbicide used on soybeans and vegetables	Some people who drink water containing dinoseb well in excess of the MCL over many years could experience reproductive difficulties.
50. Diquat	0.02 mg/l	1000	20 ppb	20 ppb	Runoff from herbicide use	Some people who drink water containing diquat in excess of the MCL over many years could get cataracts.
51. Dioxin [2,3,7,8-TCDD] (ppq)	0.00000003 mg/l	1,000,000,000	30 ppq	0	Emissions from waste incineration and other combustion; Discharge from chemical factories	Some people who drink water containing dioxin in excess of the MCL over many years could experience reproductive difficulties and may have an increased risk of getting cancer.
52. Endothall	0.1 mg/l	1000	100 ppb	100 ppb	Runoff from herbicide use	Some people who drink water containing endothall in excess of the MCL over many years could experience problems with their stomach or intestines.
53. Endrin	0.002 mg/l	1000	2 ppb	2 ppb	Residue of banned insecticide	Some people who drink water containing endrin in excess of the MCL over many years could experience liver problems.
54. Epichlorohydrin	TT	-	TT	0	Discharge from industrial chemical factories; An impurity of some water treatment chemicals	Some people who drink water containing high levels of epichlorohydrin over a long period of time could experience stomach problems, and may have an increased risk of getting cancer.
55. Ethylene dibromide	0.00002 mg/l	1,000,000	20 ppt	0	Discharge from petroleum refineries	Some people who drink water containing ethylene dibromide in excess of the MCL over many years could experience problems with their liver, stomach, reproductive system, or kidneys, and may have an increased risk of getting cancer.

Contaminant	Traditional MCL	To convert for CCR, multiply by	MCL in CCR units	MCLG in CCR units	Major Sources in Drinking Water	Health Effects Language
56. Glyphosate	0.7 mg/l	1000	700 ppb	700 ppb	Runoff from herbicide use	Some people who drink water containing glyphosate in excess of the MCL over many years could experience problems with their kidneys or reproductive difficulties.
57. Heptachlor	0.0004 mg/l	1,000,000	400 ppt	0	Residue of banned pesticide	Some people who drink water containing heptachlor in excess of the MCL over many years could experience liver damage and may have an increased risk of getting cancer.
58. Heptachlor epoxide	0.0002 mg/l	1,000,000	200 ppt	0	Breakdown of heptachlor	Some people who drink water containing heptachlor epoxide in excess of the MCL over many years could experience liver damage, and may have an increased risk of getting cancer.
59. Hexachlorobenzene	0.001 mg/l	1000	1 ppb	0	Discharge from metal refineries and agricultural chemical factories	Some people who drink water containing hexachlorobenzene in excess of the MCL over many years could experience problems with their liver or kidneys, or adverse reproductive effects, and may have an increased risk of getting cancer.
60. Hexachlorocyclopentadiene	0.05 mg/l	1000	50 ppb	50 ppb	Discharge from chemical factories	Some people who drink water containing hexachlorocyclopentadiene well in excess of the MCL over many years could experience problems with their kidneys or stomach.
61. Lindane	0.0002 mg/l	1,000,000	200 ppt	200 ppt	Runoff/leaching from insecticide used on cattle, lumber, gardens	Some people who drink water containing lindane in excess of the MCL over many years could experience problems with their kidneys or liver.
62. Methoxychlor	0.04 mg/l	1000	40 ppb	40 ppb	Runoff/leaching from insecticide used on fruits, vegetables, alfalfa, livestock	Some people who drink water containing methoxychlor in excess of the MCL over many years could experience reproductive difficulties.
63. Oxamyl [Vydate]	0.2 mg/l	1000	200 ppb	200 ppb	Runoff/leaching from insecticide used on apples, potatoes and tomatoes	Some people who drink water containing oxamyl in excess of the MCL over many years could experience slight nervous system effects.

Contaminant	Traditional MCL	To convert for CCR, multiply by	MCL in CCR units	MCLG in CCR units	Major Sources in Drinking Water	Health Effects Language
64. PCBs [Polychlorinated biphenyls]	0.0005 mg/l	1,000,000	500 ppt	0	Runoff from landfills; Discharge of waste chemicals	Some people who drink water containing PCBs in excess of the MCL over many years could experience changes in their skin, problems with their thymus gland, immune deficiencies, or reproductive or nervous system difficulties, and may have an increased risk of getting cancer.
65. Pentachlorophenol	0.001 mg/l	1000	1 ppb	0	Discharge from wood preserving factories	Some people who drink water containing pentachlorophenol in excess of the MCL over many years could experience problems with their liver or kidneys, and may have an increased risk of getting cancer.
66. Picloram	0.5 mg/l	1000	500 ppb	500 ppb	Herbicide runoff	Some people who drink water containing picloram in excess of the MCL over many years could experience problems with their liver.
67. Simazine	0.004 mg/l	1000	4 ppb	4 ppb	Herbicide runoff	Some people who drink water containing simazine in excess of the MCL over many years could experience problems with their blood.
68. Toxaphene	0.003 mg/l	1000	3 ppb	0	Runoff/leaching from insecticide used on cotton and cattle	Some people who drink water containing toxaphene in excess of the MCL over many years could have problems with their kidneys, liver, or thyroid, and may have an increased risk of getting cancer.
Volatile Organic Contaminants						
69. Benzene	0.005 mg/l	1000	5 ppb	0	Discharge from factories; Leaching from gas storage tanks and landfills	Some people who drink water containing benzene in excess of the MCL over many years could experience anemia or a decrease in blood platelets, and may have an increased risk of getting cancer.
70. Carbon tetrachloride	0.005 mg/l	1000	5 ppb	0	Discharge from chemical plants and other industrial activities	Some people who drink water containing carbon tetrachloride in excess of the MCL over many years could experience problems with their liver and may have an increased risk of getting cancer.

Contaminant	Traditional MCL	To convert for CCR, multiply by	MCL in CCR units	MCLG in CCR units	Major Sources in Drinking Water	Health Effects Language
71. Chlorobenzene	0.1 mg/l	1000	100 ppb	100 ppb	Discharge from chemical and agricultural chemical factories	Some people who drink water containing chlorobenzene in excess of the MCL over many years could experience problems with their liver or kidneys.
72. o-Dichlorobenzene	0.6 mg/l	1000	600 ppb	600 ppb	Discharge from industrial chemical factories	Some people who drink water containing o-dichlorobenzene well in excess of the MCL over many years could experience problems with their liver, kidneys, or circulatory systems.
73. p-Dichlorobenzene	0.005 mg/l	1000	5 ppb	5 ppb	Discharge from industrial chemical factories	Some people who drink water containing p-dichlorobenzene in excess of the MCL over many years could experience anemia, damage to their liver, kidneys, or spleen, or changes in their blood.
74. 1,2-Dichloroethane	0.005 mg/l	1000	5 ppb	0	Discharge from industrial chemical factories	Some people who drink water containing 1,2-dichloroethane in excess of the MCL over many years may have an increased risk of getting cancer.
75. 1,1-Dichloroethylene	0.007 mg/l	1000	7 ppb	7 ppb	Discharge from industrial chemical factories	Some people who drink water containing 1,1-dichloroethylene in excess of the MCL over many years could experience problems with their liver.
76. cis-1,2-Dichloroethylene	0.07 mg/l	1000	70 ppb	70 ppb	Discharge from industrial chemical factories	Some people who drink water containing cis-1,2-dichloroethylene in excess of the MCL over many years could experience problems with their liver.
77. trans-1,2-Dichloroethylene	0.1 mg/l	1000	100 ppb	100 ppb	Discharge from industrial chemical factories	Some people who drink water containing trans-1,2-dichloroethylene well in excess of the MCL over many years could experience problems with their liver.
78. Dichloromethane	0.005 mg/l	1000	5 ppb	0	Discharge from pharmaceutical and chemical factories	Some people who drink water containing dichloromethane in excess of the MCL over many years could have liver problems and may have an increased risk of getting cancer.
79. 1,2-Dichloropropane	0.005 mg/l	1000	5 ppb	0	Discharge from industrial chemical factories	Some people who drink water containing 1,2-dichloropropane in excess of the MCL over many years may have an increased risk of getting cancer.

Contaminant	Traditional MCL	To convert for CCR, multiply by	MCL in CCR units	MCLG in CCR units	Major Sources in Drinking Water	Health Effects Language
80. Ethylbenzene	0.7 mg/l	1000	700 ppb	700 ppb	Discharge from industrial chemical factories	Some people who drink water containing ethylbenzene well in excess of the MCL over many years could experience problems with their liver or kidneys.
81. Haloacetic Acids (HAA5)	0.060 mg/l	1000	60 ppb	N/A	By-product of drinking water disinfection	Some people who drink water containing haloacetic acids in excess of the MCL over many years may have an increased risk of getting cancer.
82. Styrene	0.1 mg/l	1000	100 ppb	100 ppb	Discharge from rubber and plastic factories; Leaching from landfills	Some people who drink water containing styrene well in excess of the MCL over many years could have problems with their liver, kidneys, or circulatory system.
83. Tetrachloroethylene	0.005 mg/l	1000	5 ppb	0	Discharge from factories and dry cleaners and asbestos cement lined pipes	Some people who drink water containing tetrachloroethylene in excess of the MCL over many years could have problems with their liver, and may have an increased risk of getting cancer.
84. 1,2,4-Trichlorobenzene	0.07 mg/l	1000	70 ppb	70 ppb	Discharge from textile-finishing factories	Some people who drink water containing 1,2,4-trichlorobenzene well in excess of the MCL over many years could experience changes in their adrenal glands.
85. 1,1,1-Trichloroethane	0.2 mg/l	1000	200 ppb	200 ppb	Discharge from metal degreasing sites and other factories	Some people who drink water containing 1,1,1-trichloroethane in excess of the MCL over many years could experience problems with their liver, nervous system, or circulatory system.
86. 1,1,2-Trichloroethane	0.005 mg/l	1000	5 ppb	3 ppb	Discharge from industrial chemical factories	Some people who drink water containing 1,1,2-trichloroethane well in excess of the MCL over many years could have problems with their liver, kidneys, or immune systems.
87. Trichloroethylene	0.005 mg/l	1000	5 ppb	0	Discharge from metal degreasing sites and other factories	Some people who drink water containing trichloroethylene in excess of the MCL over many years could experience problems with their liver and may have an increased risk of getting cancer.

Contaminant	Traditional MCL	To convert for CCR, multiply by	MCL in CCR units	MCLG in CCR units	Major Sources in Drinking Water	Health Effects Language
88. TTHMs [Total trihalomethanes]	0.08 mg/l	1000	80 ppb	n/a	By-product of drinking water disinfection	Some people who drink water containing trihalomethanes in excess of the MCL over many years may experience problems with their liver, kidneys, or central nervous systems, and may have an increased risk of getting cancer.
89. Toluene	1 mg/l	-	1 ppm	1 ppm	Discharge from petroleum factories	Some people who drink water containing toluene well in excess of the MCL over many years could have problems with their nervous system, kidneys, or liver.
90. Vinyl Chloride	0.002 mg/l	1000	2 ppb	0	Leaching from PVC piping; Discharge from plastics factories	Some people who drink water containing vinyl chloride in excess of the MCL over many years may have an increased risk of getting cancer.
91. Xylenes	10 mg/l (10,000 ppb)	- 1000	10 ppm 10,000 ppb	10 ppm	Discharge from petroleum factories; Discharge from chemical factories	Some people who drink water containing xylenes in excess of the MCL over many years could experience damage to their nervous system.

Att. D - Unregulated Contaminants Chart
Sources to Drinking Water and Health Effects

CASRN - Chemical Abstract Services Registry Number
ORSG – Office of Research and Standards Guideline
mg/L – milligrams per liter (same as ppm)
ppm- parts per million
ppb – Parts per billion
ppt – Parts per trillion
ppq – parts per quadrillion
pCi/l - picocuries per liter
UCMR3 – Unregulated Contaminant Monitoring Rule 3

Chemical (CASRN)	ORSG (for UCMR3 this is the minimum reporting value)	To convert for CCR, multiply by	ORSG in CCR units (or Min Reporting Value)	Source to Drinking Water	Health Effects
Acetone (67641)	6.3 mg/L	-	6.3 ppm	Discharge from industrial production and use, in automobile exhaust, from landfills and natural sources	Some people who drink water containing acetone a high concentrations for many years could experience effects on the blood, kidney, liver, and reproductive system.
Aldicarb (116063)	0.003 mg/L	1000	3 ppb	Run-off from use as a pesticide	Some people who drink water containing aldicarb a high concentrations for many years could experience effects on the central nervous system.
Aldicarb sulfone (1646884)	0.002 mg/L	1000	2 ppb	Degraded from aldicarb by plants	Some people who drink water containing aldicarb sulfone in high concentrations for many years could experience effects on the central nervous system.
Aldicarb sulfoxide (74839)	0.004 mg/L	1000	4 ppb	Degraded from aldicarb by plants	Some people who drink water containing aldicarb sulfoxide in high concentrations for many years could experience effects on the central nervous system.
Aldrin (309002)	*			Run-off from insecticide use	Some people who drink water containing aldrin in high concentrations for many years could experience liver damage, kidney effects.
4-androstene-3,17-dione (63058)	(UCMR3[1]) 0.0003 ppb	1,000,000	300 ppq		

Chemical (CASRN)	ORSG (for UCMR3 this is the minimum reporting value)	To convert for CCR, multiply by	ORSG in CCR units (or Min Reporting Value)	Source to Drinking Water	Health Effects
	*				
Bromobenzene (108861)	*			Discharge from use in chemical manufacturing	Some people who drink water containing in high concentrations of bromobenzene for many years could experience central nervous system effects
Bromomethane (methyl bromide) (74839)	(UCMR3[1]) 0.02 ppb (ORSG) 0.01 ppm	1000	(UCMR3[1]) 20 ppt (ORSG) 10 ppb	Run-off from use as a fumigant	Some people who drink water containing bromomethane at high concentrations for many years could experience digestive tract effects, and headaches.
Bromodichloromethane (75274)	*			Trihalomethane; by-product of drinking water chlorination	Some people who drink water containing bromodichloromethane at high concentrations for many years could experience liver and kidney problems.
Bromochloromethane (Halon 1001) (74975)	(UCMR3[1]) 0.06 ppb *	1000	60 ppt		
Bromoform (75252)	*			Trihalomethane; by- product of drinking water chlorination	Some people who drink water containing bromoform at high concentrations for many years could experience liver and kidney problems.
Butachlor (23184669)	*			Run-off from use as a herbicide	Some people who drink water containing butachlor at high concentrations for many years could experience liver effects.
1,3 Butadiene (106990)	(UCMR3[1]) 0.1 ppb *	1000	100 ppt		

Chemical (CASRN)	ORSG (for UCMR3 this is the minimum reporting value)	To convert for CCR, multiply by	ORSG in CCR units (or Min Reporting Value)	Source to Drinking Water	Health Effects
Butylbenzene isomers (*n;sec;tert*)	*			Run-off from industrial use	Some people who drink water containing butylbenzene isomers at high concentrations for many years for many years could experience central nervous system effects.
Carbaryl (63252)	*			Run-off from use as an insecticide	Some people who drink water containing carbaryl at high concentrations for many years for many years could experience kidney and liver effects.
Chlorate (14866683)	(UCMR3[1]) 20 ppb *	-	20 ppb		
Chlorodifluoromethane (HCFC-22) (75456)	(UCMR3[1]) 0.08 ppb *	1000	80 ppt		
Chloroethane (75003)	*			Discharge from industrial uses	Some people who drink water containing chloroethane at high concentrations for many years could experience dizziness, nausea, and vomiting.
Chloroform (67663)	0.07 mg/L	1000	70 ppb	Trihalomethane; by-product of drinking water chlorination. [In non-chlorinated sources, chloroform may be naturally occurring.]	Some people who drink water containing chloroform at high concentrations for many years could experience liver and kidney problems and may have an increased risk of cancer.
Chloromethane (methyl chloride) (74873)	(UCMR3[1]) 0.2 ppb *	1000	200 ppt	Discharge from industrial uses	Some people who drink water containing chloromethane at high concentrations for many years could experience dizziness and fatigue.
o-Chlorotoluene (95498)	*			Discharge from industrial use	Some people who drink water containing o-chlorotoluene at high concentrations for many years could experience central nervous system effects.

Chemical (CASRN)	ORSG (for UCMR3 this is the minimum reporting value)	To convert for CCR, multiply by	ORSG in CCR units (or Min Reporting Value)	Source to Drinking Water	Health Effects
Chromium (n/a)	(UCMR3[1]) 0.2 ppb *	1000	200 ppt		
Chromium-6 (18540299)	(UCMR3[1]) 0.03 ppb *	1000	30 ppt		
Cobalt (7440484)	(UCMR3[1]) 1 ppb *	-	1 ppb		
Dibromochloromethane (124481)	*			Trihalomethane; by-product of drinking water chlorination	Some people who drink water containing dibromochloromethane at high concentrations for many years could experience liver and kidney problems.
Dicamba (1918009)	*			Run-off from use as a herbicide	Some people who drink water containing dicamba at high concentrations for many years could experience central nervous system effects.
m-Dichlorobenzene (541731)	*			Discharge from use in chemical manufacturing	Some people who drink water containing m-dichlorobenzene at high concentrations for many years could experience damage to red blood cells.
Dichlorodifluoromethane (Freon 12) (75718)	1.4 mg/L	-	1.4 ppm	Discharge from use as a refrigerant	Some people who drink water containing dichlorodifluoromethane at high concentrations for many years could experience dizziness and headaches.
1,1-Dichloroethane (75343)	(UCMR3[1]) 0.03 ppb (ORSG) 0.07 ppm	1000	30 ppt 70 ppb	Discharge from use as a degreasing agent	Some people who drink water containing 1,1-dichloroethane at high concentrations for many years could experience liver and kidney effects.

Chemical (CASRN)	ORSG (for UCMR3 this is the minimum reporting value)	To convert for CCR, multiply by	ORSG in CCR units (or Min Reporting Value)	Source to Drinking Water	Health Effects
2,2-Dichloropropane	*			Discharge from use in chemical manufacturing	Some people who drink water containing 2,2-dichloropropane at high concentrations for many years could experience central nervous system effects.
1,3-Dichloropropane (142289)	*			Discharge from use in chemical manufacturing	Some people who drink water containing 1,3-dichloropropane at high concentrations for many years could experience central nervous system effects.
1,1-Dichloropropene	*			Discharge from use in chemical manufacturing	Some people who drink water containing 1,1-dichloropropene at high concentrations for many years could experience central nervous system effects.
1,3-Dichloropropene (*cis,trans*) (542756)	0.0004 mg/L	1,000,000	400 ppt	Run-off from use as a nematocide	Some people who drink water containing *cis* and *trans*-1.3-dichloropropene at high concentrations for many years could experience irritation of the eyes, ears, nose and throat or cancer.
Dieldrin (60571)	*			Run-off from pesticide application	Some people who drink water containing dieldrin at high concentrations for many years could experience liver damage, convulsions, or cancer.
1,4-Dioxane (123911)	(UCMR3[1]) 0.07 ppb	1000	70 ppt	Discharge from chemical manufacturing and landfills	Some people who drink water containing 1,4-dioxane at high concentrations for many years could experience chronic kidney and liver effects and liver cancer.
	(ORSG) 0.0003 mg/L		0.3 ppb		
Enteroviruses (n/a)	(UCMR3[1]) N/A *		N/A		

Chemical (CASRN)	ORSG (for UCMR3 this is the minimum reporting value)	To convert for CCR, multiply by	ORSG in CCR units (or Min Reporting Value)	Source to Drinking Water	Health Effects
Equilin (474862)	(UCMR3[1]) 0.004 ppb *	1000	4 ppt		
17-β-estradiol (50282)	(UCMR3[1]) 0.0004 ppb *	1,000,000	400 ppq		
Estrone (53167)	(UCMR3[1]) 0.002 ppb *	1000	2 ppt		
Ethylene glycol (107211)	14 mg/L	-	14 ppm	Run-off from use as a deicing chemical; discharge from antifreeze and industrial solvents	Some people who drink water containing ethylene glycol at high concentrations for many years could experience effects on the kidneys, nervous system, and the heart.
17-α-ethynylestradiol (ethinyl estradiol) (57636)	(UCMR3[1]) 0.0009 ppb *	1,000,000	900 ppq		
Hexachlorobutadiene (87683)	*			Discharge from use as an industrial solvent	Some people who drink water containing hexachlorobutadiene at high concentrations for many years could experience kidney effects and effects on the fetus.
3-Hydroxycarbofuran	*			Breakdown product from the use of the pesticide carboxyfuran	Some people who drink water containing 3-hydroxycarbofuran at high concentrations for many years could experience liver effects.
16-α-hydroxyestradiol (estriol) (50271)	(UCMR3[1]) 0.0008 ppb *	1,000,000	800 ppq		

Chemical (CASRN)	ORSG (for UCMR3 this is the minimum reporting value)	To convert for CCR, multiply by	ORSG in CCR units (or Min Reporting Value)	Source to Drinking Water	Health Effects
Isopropylbenzene (98828)	*			Discharge from chemical manufacturing	Some people who drink water containing isopropylbenzene at high concentrations for many years could experience central nervous system effects.
Isopropyltoluene	*			Discharge from chemical manufacturing	Some people who drink water containing isopropyltoluene at high concentrations for many years may experience central nervous system effects.
Manganese (7439-96-5)	0.30 mg/L	1000	300 ppb	Erosion of natural deposits	Infants and children who drink water containing manganese at high concentrations may have learning and behavior problems. People with liver disease who drink water containing manganese at high concentrations may have neurological disorders.
Methyl ethyl ketone (78933)	0.35 mg/L	1000	350 ppb	Discharge from use as a production solvent and degreaser	Some people who drink water containing methyl ethyl ketone at high concentrations for many years could experience effects on the kidney.
Methyl isobutyl ketone (108101))	4.0 mg/L	-	4 ppm	Discharge from use as a production and extraction solvent	Some people who drink water containing methyl isobutyl ketone at high concentrations for many years could experience effects on the kidney and liver.
Methyl *tertiary* butyl ether[3] or MTBE (1634044)	0.07 mg/L	1000	70 ppb	Fuel additive; leaks and spills from gasoline storage tanks	Some people who drink water containing methyl *tertiary* butyl ether at high concentrations for many years could experience chronic effects on the kidney and liver and possible cancer.
Methomyl (16752775)	*			Runoff from use as an insecticide	Some people who drink water containing methomyl at high concentrations for many years could experience kidney effects.

[3] The Massachusetts Office of Research and Standards (ORSG) has adopted a guideline of 70 µg/L (ppb) as a health protective concentration for MTBE in drinking water. MTBE also has a secondary MCL of 20-40 ppb.

Chemical (CASRN)	ORSG (for UCMR3 this is the minimum reporting value)	To convert for CCR, multiply by	ORSG in CCR units (or Min Reporting Value)	Source to Drinking Water	Health Effects
Metolachlor (51218452)	0.1 mg/L	1000	100 ppb	Run-off from use as a herbicide	Some people who drink water containing metolochlor at high concentrations for many years could experience cancer.
Metribuzin (21087649)	*			Run-off from use as a herbicide	Some people who drink water containing metribuzin at high concentrations for many years could experience liver and kidney effects.
Molybdenum (7439987)	(UCMR3[1]) 1 ppb *	-	1 ppb		
Naphthalene (91203)	0.140 mg/L	1000	140 ppb	Discharge from use in mothballs and other domestic products	Some people who drink water containing naphthalene at high concentrations for many years could experience damage to red blood cells, nausea and vomiting.
Nickel (7440020)	0.1 mg/L	1000	100 ppb	Discharge from domestic wastewater, landfills, and mining and smelting operations	Some people who drink water containing nickel at high concentrations for many years could experience effects on the lung, stomach, blood, liver, kidneys, immune system, reproduction, and development.
N-nitrosodi methylamine (NDMA) (62759)	*			Discharge from industrial use; as a by-product of drinking water treatment; produced from naturally occurring precursor chemicals	Some people who drink water containing NDMA at high concentrations as well as infants born to pregnant women who drink the water may experience an increased risk of cancer. This chemical may also produce liver disease and kidney effects after short-term exposure to high doses or long-term exposure to lower doses.
Noroviruses (n/a)	(UCMR3[1]) N/A *		N/A		
Perfluorooctanesulfoic Acid (PFOS) (1763231)	(UCMR3[1]) 0.04 ppb *	1000	40 ppt		

Chemical (CASRN)	ORSG (for UCMR3 this is the minimum reporting value)	To convert for CCR, multiply by	ORSG in CCR units (or Min Reporting Value)	Source to Drinking Water	Health Effects
Perfluorooctanoic Acid (PFOA) (335671)	(UCMR3[1]) 0.02 ppb *	1000	20 ppt		
Perfluorobutanesulfonic Acid (PFBS) (375735)	(UCMR3[1]) 0.09 ppb *	1000	90 ppt		
Perfluorohexanesulfonic Acid (PFHxS) (355464)	(UCMR3[1]) 0.03ppb *	1000	30 ppt		
Perfluoroheptanoic Acid (PFHpA) (375859)	(UCMR3[1]) 0.01 ppb *	1000	10 ppt		
Perfluorononanoic Acid (PFNA) (375951)	(UCMR3[1]) 0.02 ppb *	1000	20 ppt		
Petroleum hydrocarbons Total P.H. Aliphatics C5-C8 (30080) C9-C12(30089) C9-C18(30092) C19-C36(30057) Aromatics C9-C10(30087) C11-C22(30048)	 0.2 mg/L 0.3 mg/L 0.7 mg/L 0.7 mg/L 14.0mg/L 0.2 mg/L 0.2 mg/L	1000	 200 ppb 300 ppb 700 ppb 700 ppb 14 ppm 200 ppb 200 ppb	Discharge from the production, distribution, storage, and use of petroleum in transportation and industrial applications	Some people who drink water containing petroleum hydrocarbons at high concentrations for many years could experience effects on the central nervous system, blood, immune system, liver, spleen, kidneys, developing fetus, and lungs.
Propachlor (1918167)	*			Run-off from use as a herbicide	Some people who drink water containing propachlor at high concentrations for many years could experience liver effects.
n-propylbenzene (103651)	*			Discharge from chemical manufacturing	Some people who drink water containing n-propylbenzene at high concentrations for many years

Chemical (CASRN)	ORSG (for UCMR3 this is the minimum reporting value)	To convert for CCR, multiply by	ORSG in CCR units (or Min Reporting Value)	Source to Drinking Water	Health Effects
					may experience central nervous system effects.
Radon-222 (14869677)	10,000 pCi/L	-	10,000 pCi/L	Natural sources	Some people who drink water containing radon-222 at high concentrations for many years could experience cancer of the lung.
Sodium (7440235)	20 mg/L	-	20 ppm	Discharge from the use and improper storage of sodium-containing de-icing compounds or in water-softening agents	Some people who drink water containing sodium at high concentrations for many years could experience an increase in blood pressure.
Strontium (7440246)	(UCMR3[1]) 0.3 ppb *	1000	300 ppt		
Sulfate	*			Natural sources	Some people who drink water containing sulfate at high concentrations for many years could experience diarrhea.
Tertiary-amyl methyl ether (TAME) (994058)	0.09 mg/L	1000	90 ppb	Discharge from use as an octane enhancer and oxygenate in gasoline	Some people who drink water containing TAME at high concentrations for many years could experience effects on the kidney and liver and possible cancer.
Tertiary butyl alcohol (TBA) (75650)	0.12 mg/L	1000	120 ppb	Degraded from MTBE; discharged from use as an octane enhancer and oxygenate in gasoline	Some people who drink water containing TBA at high concentrations for many years could experience effects on the kidney and bladder and possible cancer.
Testosterone (58220)	(UCMR3[1]) 0.0001 ppb *	1,000,000	100 ppq		
1,1,1,2-Tetrachloroethane (630206)	*			Discharge from use in chemical manufacturing	Some people who drink water containing 1,1,1,2-tetrachloroethane at high concentrations for many years could experience liver effects.

Chemical (CASRN)	ORSG (for UCMR3 this is the minimum reporting value)	To convert for CCR, multiply by	ORSG in CCR units (or Min Reporting Value)	Source to Drinking Water	Health Effects
1,1,2,2-Tetrachloroethane (79345)	*			Discharge from use in dry cleaning	Some people who drink water containing 1,1,2,2-tetrachloroethane at high concentrations for many years could experience nausea, vomiting and liver damage.
Tetrahydrofuran (109999)	1.3 mg/L	-	1.3 ppm	Discharge from use as an adhesive for joining pipes in water treatment systems and as a production solvent	Some people who drink water containing tetrahydrofuran at high concentrations for many years could experience effects o the central nervous system, liver, kidney, and lung and possible cancer.
1,2,3-Trichlorobenzene	*			Discharge from use in chemical manufacturing	Some people who drink water containing 1,2,3-trichlorobenzene at high concentrations for many years could experience liver effects.
1,1,2-Trichloro-1,2,2-trifluoroethane (76131)	210 mg/L	-	210 ppm	Discharge from use as a cleaning agent, production solvent, and blowing agent	Some people who drink water containing 1,1,2-trichloro-1,2,2-trifluoroethane at high concentrations for many years could experience problems on the nervous system.
Trichlorofluoromethane (Freon 11) (75694)	*			Discharge from use as a refrigerant	Some people who drink water containing trichlorofluoromethane at high concentrations for many years could experience central nervous system effects.
1,2,3-Trichloropropane (96184)	(UCMR3[1]) 0.03 ppb *	1000	30 ppt	Discharge from use in paint and varnish removers	Some people who drink water containing 1,2,3-trichloropropane at high concentrations for many years could experience liver damage.
1,2,4-Trimethylbenzene (95636)	*			Discharge from use in dyes and paints	Some people who drink water containing 1,2,4-trimethylbenzene at high concentrations for many years could experience central nervous system effects.
1,3,5-Trimethylbenzene (108678)	*			Discharge from use in chemical manufacturing	Some people who drink water containing 1,3,5-trimethylbenzene at high concentrations for many years could experience central nervous system

Chemical (CASRN)	ORSG (for UCMR3 this is the minimum reporting value)	To convert for CCR, multiply by	ORSG in CCR units (or Min Reporting Value)	Source to Drinking Water	Health Effects
					effects.
Vanadium (7440622)	(UCMR3[1]) 0.2 ppb *	1000	200 ppt		

* There is no ORS Guideline issued as yet for these contaminants. Please contact the MassDEP Office of Research and Standards (ORS) at 617-292-5598 for health risk information for these chemicals.

[1] To report UCMR3detections (or unregulated contaminants without health effects or source information), in a table list the contaminant name, the average of the detects, and the range of detects along with the text: *"Unregulated contaminants are those for which EPA has not established drinking water standards. The purpose of unregulated contaminant monitoring is to assist EPA in determining their occurrence in drinking water and whether future regulation is warranted"*.

Att. E - Secondary Contaminants Chart
Sources to Drinking Water and Health Effects

CASRN - Chemical Abstract Services Registry Number
SMCL – Secondary Maximum Contaminant Level
Mg/L – milligram per liter
C.U. – Color Unit
T.O.N. – Threshold odor numbers

ppm - parts per million
ppb - parts per billion

Chemical (CASRN)	SMCL	To convert for CCR, multiply by	SMCL in CCR units	Source to Drinking Water	Health and/or Aesthetic Effects
Aluminum	0.2 mg/L	1000	200 ppb	Residue from water treatment process: erosion of natural deposits	May produce colored water
Chloride	250 mg/L	-	250 ppm	Runoff and leaching from natural deposits; seawater influence	May produce a salty taste
Color	15 C.U.	-	15 C.U.		May produce a visible tint
Copper	1 mg/L	-	1 ppm	Internal corrosion of household plumbing; erosion of natural deposits	May produce a metallic taste; blue-green staining
Corrosivity	Non-corrosive	-	-	Balance of hydrogen, carbon, and oxygen in water, affected by temperature and other factors	May produce a metallic taste; corroded pipes; fixture staining
Fluoride	2.0 mg/L	-	2 ppm	Erosion of natural deposits	May produce tooth discoloration

Chemical (CASRN)	SMCL	To convert for CCR, multiply by	SMCL in CCR units	Source to Drinking Water	Health and/or Aesthetic Effects
Foaming agents	0.5 mg/L	1000	500 ppb	Municipal and industrial waste discharge	May produce froth; cloudiness; bitter taste; odor
Iron	0.3 mg/L	1000	300 ppb	Natural and industrial sources as well as aging and corroding distribution systems and household pipes	Use of water containing iron at concentrations above the secondary MCL may result in aesthetic issues including the staining of laundry and plumbing fixtures and water with an unpleasant metallic taste and rusty odor.
Manganese[4]	0.05 mg/L	1000	50 ppb	Natural sources as well as discharges from industrial uses	Use of water containing manganese at concentrations above the secondary MCL may result in aesthetic issues including the staining of laundry and plumbing fixtures and water with an unpleasant bitter metallic taste, odor, and/or black-brown color.
Methyl *tertiary* butyl ether (1634044)	0.02-0.04 mg/L	1000	20-40 ppb	Discharge from use as an octane enhancer and oxygenate in gasoline	Some people who drink water containing methyl *tertiary* butyl ether at high concentrations for many years could experience chronic effects on the kidney and liver and possible cancer.
Odor	3 T.O.N.	-	3 T.O.N.	Naturally occurring organic materials that form ions when in water; seawater influence	May produce a "rotten-egg", musty, or chemical smell
pH	6.5 – 8.5	-	6.5 – 8.5	Runoff and leaching from natural deposits; seawater influence	Low pH may produce: bitter metallic taste; corrosion High pH may produce a slippery feel; soda taste; deposits
Silver	0.10 mg/L	1000	100 ppb	Naturally occurring element	May produce skin discoloration; graying of the white part of the eye

[4] EPA has established a lifetime Health Advisory (HA) of 0.3 mg/L and an acute HA at 1.0 mg/L

Chemical (CASRN)	SMCL	To convert for CCR, multiply by	SMCL in CCR units	Source to Drinking Water	Health and/or Aesthetic Effects
Sulfate	250 mg/L	-	250 ppm	Runoff and leaching from natural deposits; industrial wastes	May produce a salty taste
Total dissolved solids (TDS)	500 mg/L	-	500 ppm	Runoff and leaching from natural deposits; seawater influence	May produce hardness; deposits; colored water; staining; salty taste
Zinc	5 mg/L	-	5 ppm	Corrosion of household plumbing systems; erosion of natural deposits	May produce a metallic taste

* Please go to http://water.epa.gov/drink/contaminants/secondarystandards.cfm for additional information on secondary contaminants.

Att. F - How to Report Monitoring Data (Tables)

Below are examples of how systems determine the highest compliance value and the range of detected levels of contaminants under the following monitoring scenarios:

Compliance with the MCL is determined annually or less frequently.

One sampling site/one sampling date.

March 2014 - 0.9 ppb
REPORT IN TABLE: Highest Detected Level = 0.9. Report no range

A sample table could look like this:

Contaminant	Sample Date	Result	MCL	MCLG	Violation	Possible Source
Benzene (ppb)	3/10/14	0.9	5	0	no	Discharge from factories; Leaching from gas storage tanks and landfills

Multiple sampling sites/one sampling date.

Barium	Mar 2014
well #1	0.60
well #2	0.46
well #3	ND
REPORT IN TABLE: Highest Level = 0.60 AND Range = nd - 0.60	

A sample table could look like this:

Contaminant	Date	Highest Detect	Range	MCL	MCLG	Violation	Possible Source
Barium (ppm)	3/10/14	0.60	ND – 0.60	2	2	no	Discharge from drilling wastes; Discharge from meal refineries; Erosion of natural deposits.

Compliance with MCL determined by running annual average of all samples taken from one sampling point.

1 sampling site/multiple sampling dates.

Atrazine	1st quarter 2014	2nd quarter 2014	3rd quarter 2014	4th quarter 2014
well #1	0.8	3.8	2.1	0.9
REPORT IN TABLE: Average = 1.9 AND Range = 0.8 - 3.8				

A sample table could look like this:

Contaminants	Average	Range of detects	MCL	MCLG	Violation	Possible Sources
Atrazine (ppb)	1.9	0.8 – 3.8	3	3	No	Runoff from herbicide used on row crops.

Compliance with MCL determined by a running annual average of all samples at all sampling points

Multiple sampling sites/multiple sampling dates with a TTHM example.

TTHMs	2nd quarter 2013	3rd quarter 2013	4th quarter 2013	1st quarter 2014	2nd quarter 2014	3rd quarter 2014	4th quarter 2014
site #1	-	-	-	45	60	125	70
site #2	-	-	-	40	55	115	60
site #3	-	-	-	45	60	105	70
site #4	-	-	-	50	65	135	80
Quarterly Average	55	125	65	45	60	120	70
Running Annual Average	-	-	-	73	74	73	74
REPORT IN TABLE: Highest Annual Average = 74 AND Range = 40 -135 (See example table below.)							

Note: The averages for the last 3 quarters of 2013 are shown because they are needed to compute the running annual average. The reported range would include only detection data from 2014, unless one of the values from the previous year was so extraordinary that consumers would need

it to understand the reported annual average.

If any of the above values for the running annual average were above 80 (the revised MCL for TTHMs, effective in 2001) the report would need to include health effects language for TTHMs.

Disinfection By-Products

All systems that add a chemical disinfectant to their water must include the disinfectant levels and by-products (DBP) in their CCR.

- Free, Total, or Combined Chlorine (Chloramines)
  Report the highest annual average and the range of any of the sampling points using the daily reports.

- Total Trihalomethanes/ Haloacetic Acids
  Report the highest quarterly running annual average and the range of detects.

- Bromate
  Report the highest quarterly running annual average and the range of detects.

- Chlorite
  Report the highest monthly three-sample set averages and the range of detects in all three-sample sets collected during the year.

- Chlorine Dioxide
  Report the highest individual sample result taken at the entry point and the range of detects at the entry point only. If your system experienced a chlorine dioxide violation, you must include the following statement:
  "Compliance with the MRDL for chlorine dioxide is based on consecutive daily samples. [System Name] had [the # of violations] MRDL violations in [year]."

Stage 2 Disinfectants and Disinfection Byproducts Rule (Stage 2 DBPR)

The Stage 2 DBPR, promulgated in May 2008, applies to systems that add a primary or residual disinfectant other than ultraviolet light or deliver water that has been treated with a primary or residual disinfectant other than ultraviolet light. Under the Stage 2 DBPR some systems were required to conduct Initial Distribution System Evaluation (IDSE) monitoring for trihalomethanes (THM) and haloacetic acids (HAA5). In addition to the THM and HAA5 results you currently include in your CCR for the Stage 1 DBPR you must now include the IDSE results. The IDSE monitoring results are not used to determine compliance with MCLs under the Stage 1 DBPR so they should not be included in the running annual average column in the CCR but they must be included in the range (highest /lowest detect) columns. The individual IDSE results are not required

to be reported in the CCR. For some systems the IDSE monitoring period straddles two calendar years and as such the IDSE data will be split between two CCRs.

For reporting TTHM and HAA5 one could use this sample table:

Contaminant	Date Collected	Highest result or RAA*	Range of Detects	MCL	MCLG	Violation	Possible Sources
Total Haloacetic Acids (HAA5) (ppb)	Quarterly	23	12-26	60	n/a	N	By product of drinking water disinfection
Total Trihalomethane (TTHM) (ppb)	Quarterly	74	40-135	80	n/a	N	By product of drinking water disinfection

* RAA = Highest running annual average of four consecutive quarters

Beta Particles

The MCL for beta particles is 4 mrem/year. EPA recognizes that labs often report these results in pCi/l, and that there is no simple conversion between the two units. Therefore, it is acceptable for systems to report the detected level for beta particles in pCi/l. So that consumers may have a standard against which to compare the detected level, systems should place 50 in the MCL column and include a footnote explaining that EPA considers 50 pCi/l to be a level of concern for beta particles.

Contaminant	Date	Highest Level Found	Range of Detections	MCL	MCLG	Vio	Possible Sources
Beta particles (pCi/l)	4/7/13	10	ND-10	50*	0	N	Decay of natural and man-made deposits

*The MCL for beta particles is 4 mrem/year. EPA considers 50 pCi/l to be the level of concern for beta particles.

Systems that detect beta particles at or above 50 pCi/l must determine the actual radioactive constituents present in the water to calculate the dose exposure level in mrem/yr, and must report both the detected level and the MCL as mrem/yr.

Lead and Copper

If a system detects either lead or copper, the CCR must include the 90th percentile value from the most recent sampling and the number of sampling sites exceeding the action level. (Note: Do not include results from schools that you may sample. Use only the locations specified on your sample schedule.)

Note that if your system did not sample in the current year, you must look back on the previous 5-year period and report the latest detect in the current CCR.

	site 1	site 2	site 3	site 4	site 5	site 6	site 7	site 8	site 9	site 10
July 2013	nd	nd	8	12	19	3	nd	nd	4	22
REPORT IN TABLE: 90th percentile = 19 AND Number of Sites above AL (15) = 2										

The 90th percentile is:

(Number of samples) x (0.9) = the sample corresponding to the 90th percentile.

Therefore, if a system collects 10 samples, the 90th percentile would be the 9th highest sample (10 x 0.9). In the example above, the detect value of 19 is the 9th highest value in the 10 sites sampled.

One could use this sample table in reporting their lead and copper detections:

Contaminant	Date of sample	90th %	Action Level (AL)	MCLG	# of Sites Sampled	# of Sites Above the AL	Exceeds AL?	Possible Sources
Lead (ppb)			15	0				Corrosion of household plumbing
Copper (ppm)			1.3	1.3				Corrosion of household plumbing

Health Effects Language for Lead and Copper

Explanations of action level exceedences or violations must include potential health effects language (see Attachment C for full information):

Lead:
Infants and children who drink water containing lead in excess of the action level could experience delays in their physical or mental development. Children could show slight deficits in attention span and learning disabilities. Adults who drink this water over many years could develop kidney problems or high blood pressure.

Copper:
Copper is an essential nutrient, but some people who drink water containing copper in excess of the action level over a relatively short amount of time could experience gastrointestinal distress. Some people who drink water containing copper in excess of the action level over many years could suffer liver or kidney damage. People with Wilson's Disease should consult their personal doctor.

Long Term Enhanced Surface Water Treatment Rule (LT2ESWTR or LT2)

The LT2 Rule, promulgated in May 2008, applies to systems that use surface water sources or groundwater sources that are under the influence of surface water. In addition to the information you currently include in your CCR for the Surface Water Treatment Rule, Interim Enhanced Surface Water Treatment Rule and the Long Term 1 Enhanced Surface Water Treatment Rule you must now include information for the LT2 Rule. Systems serving at least 10,000 people were required to monitor their raw source water for *Cryptosporidium*, *E. coli*, and turbidity. Systems serving less than 10,000 people may have only been required to monitor for *E. coli*. Since *E. coli* (bacteria) and turbidity are already tested and reported in the CCR no additional reporting is needed; however, any *Cryptosporidium* detects found in either the raw or finished water must be reported.

For reporting *Cryptosporidium* one could use this sample table:

Contaminant	**Date**	Result (Oocysts/L)	MCL / MRDL / TT	MCGL	Violation	Possible Sources
Cryptosporidium			TT	0		Discharged especially where water is contaminated with sewage or animal wastes.

Manganese

If your community system detects manganese greater that 50 ug/L, you must report these concentrations in your CCR in the following ways described below. Please note there are different ways to report the level of manganese. The regulations use milligrams per liter (mg/L) which is equal to parts per million (ppm). Whole numbers must be used in the CCR so the level must be multiplied by 1000 to micrograms per liter (ug/L) which is equal to parts per billion (ppb).

1. **For manganese concentrations greater than 50 ug/L but less than or equal to 300 ug/L**

You must report the concentration (s) in the unregulated table of your report as follows: Please include the unregulated table in your CCR; manganese detects should look like this:

For reporting manganese one could use this sample table:

Unregulated or Secondary Contaminant	Date	Result or Range Detected	Average detected	SMCL	Health Advisory	Possible Sources
Manganese (ug/L) or (ppb)	__/__/2013			50	300	Erosion of natural deposits

And

2. For manganese concentrations 300 ug/L and greater

You must, in addition to the table above, also include an educational statement on manganese in the CCR report.

You may use the educational statement below or get MassDEP's written approval for alternative CCR language. The educational statement for manganese should explain the significance of the manganese detects and if customers need to be concerned by its presence. ***The bolded required language in the statement below must be included verbatim in the CCR***. Please contact MassDEP if you want to change the suggested, non-mandatory language.

"Manganese is a naturally occurring mineral found in rocks, soil and groundwater, and surface water. Manganese is necessary for proper nutrition and is part of a healthy diet, but can have undesirable effects on certain sensitive populations at elevated concentrations. The United States Environmental Protection Agency (EPA) and MassDEP have set an aesthetics-based Secondary Maximum Contaminant Level (SMCL) for manganese of 50 ug/L (micrograms per liter), or 50 parts per billion, and health advisory levels. In addition, EPA and MassDEP have also established public health advisory levels. ***Drinking water may naturally have manganese and, when concentrations are greater than 50 µg/L, the water may be discolored and taste bad. Over a lifetime, EPA recommends that people drink water with manganese levels less than 300 µg/L and over the short term, EPA recommends that people limit their consumption of water with levels over 1000 ug/L, primarily due to concerns about possible neurological effects. Children up to 1 year of age should not be given water with manganese concentrations over 300 ug/L, nor should formula for infants be made with that water for longer than 10 days.*** See: http://www.epa.gov/safewater/ccl/pdfs/reg_determine1/support_cc1_magnese_dwreport.pdf."

MCL (Maximum Contaminant Level)

The table(s) must contain the MCL for detected contaminants expressed as a number equal to or greater than one. (Please see Attachment C for the conversion factor for numbers less than one.)

For any contaminant detected in violation of an MCL, a TT, or exceeding an action level, the table(s) must contain a clear indication of the violation or exceedence.

Contaminant	Date of Sample	Level Found	Range of Detections	MCL	MCLG	Violation	Typical Source of Contaminant
Barium (ppm)	2/2013	2.4	0.03-2.4	2	2	Y	Discharge from drilling wastes and metal

							refineries

A system may also wish to highlight the case where there is no federal standard and the state has developed its own standard, using similar techniques.

Monitoring Waivers

Systems that have monitoring waivers, or for another reason monitor less often than once per year, must include information on contaminants detected in the most recent testing period. The report must also contain a brief explanation that the data for those contaminants is from the most recent testing done.

If sampling was not performed for a given parameter in the calendar year covered by the report, then data going back a maximum of five years must be used.

As shown in the CCR example, for ease of presentation a column for the date of the last sample can be included in the table with the corresponding explanation outside of the table.

Contaminant	Date	Level Found	Range of Detections	MCL	MCLG	Violati on	Possible Sources
Cyanide (ppb)	Feb 2011*	10	ND - 10	200	N	200	Discharge from steel/metal industry; discharge from fertilizer and plastic factories
Selenium (ppb)	Feb 2011*	1	ND - 1	50	N	50	Discharge from petroleum and metal refineries

**Most of the data presented in this table is from testing done between January 1 - December 31 2013. We monitor for some contaminants less than once per year, because the concentrations for those contaminants are not expected to vary significantly from year to year. As a result, some of our data though representative, is more than a year old. For those contaminants, the date of the last sample is shown in the table.*

Turbidity

When reporting turbidity as a TT/indicator of filtration performance, the highest single measurement and the lowest monthly percentage of samples meeting the requirements specified for the relevant filtration technology must be included in the report. A system may wish to present the data as follows:

Contaminant	Date	Level Found	Range of Detects	MCL	MCLG	Vio	Possible Sources
Turbidity		1		TT = 5	n/a		Soil runoff

			-	NTU			
		96%	-	TT=% of samples <0.5 NTU			

As part of an explanation for measuring turbidity, systems may wish explain that turbidity is a measure of treatment performance and is regulated as a treatment technique.

Uranium

Report Uranium detections in ppb units of measure to coincide with the MCL which is listed in ppb. If your lab report lists your uranium detect in pCi/l, you can convert to ppb by using this formula: pCi/l uranium x 1.49 = ppb uranium.

Monitoring and Reporting (M&R) Violations

Some contaminants are monitored for daily, others need to be checked far less frequently (every nine years is the longest monitoring cycle). For instance, at a minimum, drinking water systems will monitor continuously for turbidity, monthly for bacteria, and once every four years for radionuclides. An M&R violation means that the system did not perform the required testing, take adequate samples, or report a violation as required. Most of the violations experienced by PWSs are for failure to monitor the drinking water and report the results.

As shown in the CCR example, a column for violations can be placed in the detected contaminants table and further explanation of the violation presented outside of the table. In that explanation the system can indicate that while monitoring and reporting violations do not necessarily indicate a health risk. But, if a system fails to monitor it may not be aware of the potential health risk posed by a contaminant which may be present, but undetected.

If a system has multiple monitoring violations, it may be simpler and shorter to list them in a table followed by a short explanation. The table could include columns for monitoring periods, number of samples required during the period, number of samples actually taken and whether samples were taken during the following monitoring period. However, all monitoring violations are not the same and in some instances, the PWS may believe it is more appropriate to describe each violation in a short paragraph. For example, a coliform violation in which one of 100 samples was missed is less serious than missing one of two required samples.

Multiple monitoring violations listed in a table:

"We failed to complete required sampling in a timely manner. Because we did not take the required number of samples, we did not know whether the contaminants were present in your drinking water, and we are unable to tell you whether you health was at risk during that time. The contaminants for which monitoring was not done are listed in the table below, with the period during which samples should have been taken, the number of samples each contaminant required, the number taken, and when required sampling will resume."

Contaminant	Monitoring Period	Number of Samples Required	Number of Samples Taken	Date Sampling Will Resume
VOCs[1]	1/2011-12/2013	1	0	2/2014
Total Coliform Bacteria	10/1/2013-10/31/2013	100	93	11/2013

[1] VOCs also known as organic compounds, are tested by collecting one sample and testing that sample for all VOCs. VOCs include benzene, carbon tetrachloride, chlorobenzene, 1,2-dichlorobenzene, 1,4-dichlorobenzene, 1,2-dichloroethane, cis-dichloroethylene, trans-dichloroethylene, dichloromethane, 1,2-dichloropropane, ethylbenzene, styrene, tetrachloroethylene, 1,1,1-trichloroethane, trichloroethylene, toluene, 1,2,4-trichlorobenzene, 1,1-dichloroethylene, 1,1,2-trichloroethane, vinyl chloride, and xylene.

Although monitoring may be done by group as opposed to each contaminant, each contaminant should be listed for not monitoring because each is a violation. For the example above, a footnote was added to list all of the VOCs.

Regardless of whether the violation information is presented in tabular or paragraph form or a combination thereof, an explanation of the potential health effects and steps to correct the violation must also be included. If a system failed to take the sample on time, the report should say "health effects unknown." If the system took the samples accurately and on-time, but mailed the results late, the system does not need to discuss health effect.

NPDWR Violations

The CCR must include a clear and readily understandable explanation of any National Primary Drinking Water Regulations (NPDWR) violation during the reporting period, as well as any potential adverse health effects and the steps the system has taken to correct the violation.

Potential Health Effects Language

Of the seven NPDWR violations identified in the rule, EPA is prescribing mandatory health effects language for only three violations:

1) Filtration and disinfection

   Inadequately treated water may contain disease-causing organisms. These organisms include bacteria, viruses and parasites which can cause symptoms such as nausea, cramps, diarrhea, and associated headaches.

2) Lead and copper control requirements.

Lead: Infants and children who drink water containing lead in excess of the action level could experience delays in their physical or mental development. Children could show slight deficits in attention span and learning disabilities. Adults who drink this water over many years could develop kidney problems or high blood pressure.

Copper: Copper is an essential nutrient, but some people who drink water containing copper in excess of the action level over a relatively short amount of time could experience gastrointestinal distress. Some people who drink water containing copper in excess of the action level over many years could suffer liver or kidney damage. People with Wilson's disease should consult their personal doctor.

3) Treatment techniques for acrylamide and epichlorohydrin.

Acrylamide: Some people who drink water containing high levels of acrylamide over a long period of time could have problems with their nervous system or blood, and may have an increased risk of getting cancer.

Epichlorohydrin: Some people who drink water containing high levels of epichlorohydrin over a long period of time could experience stomach problems, and may have an increased risk of getting cancer.

For the remaining violations, a system may use language from Attachment C or design language that is tailored to that specific violation.

Att. G - Treatment Techniques Language

Packed Column Aeration (VOC removal)

It is possible to remove many volatile organic compounds from water by aerating it and turning the contaminants into vapor. The [*PWS name*] pumps its water to the top of a large tower, which is filled with specially designed packing material. As the water trickles down the tower, air is pumped in from the bottom. This process breaks the water up into tiny particles and allows the air to strip away the volatile contaminants.

Conventional Filtration (coagulation, flocculation, sedimentation)

Small particles and organisms such as sediment, algae and bacteria can cause water to take on unpleasant odors or tastes, and sometimes make it unhealthy to drink. To remove this material, it is necessary to chemically treat the water and then pass it through a filter.

The process begins with [chemical name(s)] being added to the water at an established rate. This prompts the small particles to coagulate, or stick together and form particles of increasing size. Heavier particles to sink to bottom of large settling basins while the cleaner water flows onto a filter bed. Filters are comprised of several layers of coarse and fine sand and gravel, which trap the small particles that did not settle out previously. Over time, filters start to clog and need to be cleaned using a high-flow backwash process.

All chemicals used for coagulation are approved for water treatment by one of the following organizations: National Sanitation Foundation (Now known as NSF International), or UL, both accredited by the American National Standards Institute (ANSI). Chemicals also have to meet performance standards established by the American Water Works Association (AWWA).

Conventional Filtration (with coagulation, flocculation & tube settling)

Small particles and organisms such as sediment, algae and bacteria can cause water to take on unpleasant odors or tastes, and sometimes make it unhealthy to drink. To remove this material, it is necessary to chemically treat the water and then pass it through a filter.

The process begins with [chemical name(s)] being added to the water. This prompts the small particles to coagulate, or stick together and form particles of increasing size. After these particles form, the water enters a large chamber containing a series of tube settlers. These tubes are about 2 inches across, from two to three feet long and are placed at a 60degree angle. Tube settlers provide a small, still environment where heavier particles can settle. The cleaner water then flows onto a filter bed. Filters are comprised of several layers of coarse and fine sand and gravel, which trap the small particles that did not settle out previously. Over time, filters start to clog and need to be cleaned using a high-flow backwash process.

All chemicals used for coagulation are approved for water treatment by one of the following organizations: National Sanitation Foundation (Now known as NSF International), or UL, both

accredited by the American National Standards Institute (ANSI). Chemicals also have to meet performance standards established by the American Water Works Association

Direct Filtration (without flocculation/sedimentation)

Small particles and organisms such as sediment, algae and bacteria can cause water to take on unpleasant odors or tastes, and sometimes make it unhealthy to drink. To remove this material, it is necessary to chemically treat the water and then pass it through a filter.

The process begins with [chemical name(s)] being added to the water at a calculated rate. This prompts the small particles to coagulate, or stick together, and form particles of increasing size. The chemically treated water then flows onto a filter bed. Filters are comprised of several layers of coarse and fine sand and gravel, which trap the small particles that did not settle out previously. Over time, filters start to clog and need to be cleaned using a high-flow backwash process.

All chemicals used for coagulation are approved for water treatment by one of the following organizations: National Sanitation Foundation (Now known as NSF International), or UL, both accredited by the American National Standards Institute (ANSI). Chemicals also have to meet performance standards established by the American Water Works Association

Adsorption Clarification (package plant)

Small particles and organisms such as sediment, algae and bacteria can cause water to take on unpleasant odors or tastes, and sometimes make it unhealthy to drink. To remove this material, it is necessary to chemically treat the water and then pass it through two types of filtering units – an adsorption clarifier and a mixed media filter bed.

The process begins with [chemical name(s)] being added to the water at an established rate. This prompts the small particles to coagulate, or stick together and form particles of increasing size. The chemically treated water then flows into the adsorption clarifier, which is a chamber filled with buoyant adsorption media. As the turbulent water passes through this unit, the large particles adhere to the beads. This effectively removes up to 95 percent of all impurities. The cleaner water then flows onto a filter bed. Filters are comprised of several layers of coarse and fine sand and gravel, which trap the remaining particles. Over time, filters start to clog and need to be cleaned using a high-flow backwash process.

All chemicals used for coagulation are approved for water treatment by one of the following organizations: National Sanitation Foundation (Now known as NSF International), or UL, both accredited by the American National Standards Institute (ANSI). Chemicals also have to meet performance standards established by the American Water Works Association.

Slow Sand Filtration

Small particles and organisms such as sediment, algae and bacteria can cause water to take on unpleasant odors or tastes, and sometimes make it unhealthy to drink. To remove this material, it is necessary to pass it through a sand filter bed that has three to four feet of sand over one foot of graded gravel.

Water is poured onto the top of the filter and passes slowly through the sand. This traps most of the particles. By the time the water reaches the bottom of the filter, better than 90 percent of all impurities have been removed. Over time, the sand filter starts to clog. When this happens, it is necessary to remove the top portion of the filter and replace it with clean sand.

Iron & Manganese Removal (oxidation and filtration)

Iron and manganese are often present in groundwater at levels that can discolor the water, or cause it to take on unpleasant odors or tastes. Even though the water may still be safe to drink, it is preferable that the iron and manganese be removed.

Removal generally requires a two-step process of oxidation and filtration. Oxidation is accomplished by adding [*chlorine, potassium permanganate*] to the water. This causes the iron and manganese to form tiny particles. Once this happens, the water passes through special filters consisting of material that is specifically designed to capture iron and manganese particles. Over time, filters start to clog and need to be cleaned using a high-flow backwash process.

Sequestration (for iron & manganese)

Iron and manganese are often present in groundwater at levels that can discolor the water, or cause it to take on unpleasant odors or tastes. Even though the water may still be safe to drink, treatment is often desirable.

Treatment consists of adding [*polyphosphates, tripolyphosphate, metaphosphate, or silicate*] to water. This results in a chemical reaction, known as sequestration, which prevents the iron and manganese from forming nuisance particles.

All chemicals used for sequestration are approved for water treatment by one of the following organizations: National Sanitation Foundation (Now known as NSF International or UL, both accredited by the American National Standards Institute (ANSI). Chemicals must also meet standards established by the American Water Works Association (AWWA).

Primary Disinfection with Ozone (with filtration)

All reservoirs and some groundwater sources contain numerous microorganisms, some of which can cause people to become sick. To eliminate disease-carrying organisms, it is necessary to disinfect the water.

Disinfection does not sterilize the water; it removes harmful organisms. Sterilization is too costly and kills all microorganisms, even though most are not harmful. The [*PWS Name*] uses ozone, a

unique form of oxygen that kills harmful organisms, as its primary disinfectant. The ozone generating equipment at the water treatment plant allows reactive gas to be bubbled into water in large contact basins. When combined with proper filtration, disinfection with ozone has been proven effective at ensuring that water is free of harmful organisms and safe to drink.

Primary Disinfection with Chlorine (with filtration)

All reservoirs and some ground water sources contain numerous microorganisms, some of which can cause people to become sick. To eliminate disease-carrying organisms, it is necessary to disinfect the water.

Disinfection does not sterilize the water; it removes harmful organisms. Sterilization is too costly and kills all microorganisms, even though most are not harmful. The [*PWS Name*] uses [*chlorine gas or sodium hypochlorite*] as its primary disinfectant. Chlorine destroys organisms by penetrating cell walls and reacting with enzymes. When combined with proper filtration, disinfection with chlorine has been proven effective at ensuring that water is free of harmful organisms and safe to drink.

Primary Disinfection with Chlorine (without filtration)

All reservoirs and some ground water sources contain numerous microorganisms some of which can cause people to be sick. To eliminate disease carrying organisms it is necessary to disinfect the water.

Disinfection does not sterilize the water, but it does destroy harmful organisms. Sterilization kills all microorganisms, even though most are not harmful, and is too costly to use on a routine basis. The [*PWS Name*] uses [*chlorine gas or sodium hypochlorite*] as its primary disinfectant. Chlorine destroys organisms by penetrating cell walls and reacting with enzymes. Disinfection with chlorine has been proven effective at ensuring that water is free of harmful organisms and safe to drink.

Chloramination

Once water has been filtered or disinfected, steps must be taken to guard against harmful organisms that may be present in the pipes that distribute water to local homes and businesses. For this reason, ammonia is added to the water as it enters the distribution system.

Ammonia reacts with previously added chlorine to create a long-lasting disinfectant known as chloramine. This prevents bacterial growth in distribution pipes. It also minimizes the formation of trihalomethanes, which have been found to cause cancer in laboratory animals and are formed when chlorine reacts with organics that occur naturally in water.

The [*PWS name*] adds ammonia to its water. This, in conjunction with chlorine, has been effective at preventing bacterial regrowth throughout the entire distribution system.

Corrosion Control through pH Adjustment

Many drinking water sources in New England are naturally corrosive (i.e., they have a pH of less than 7.0). So, the water they supply has a tendency to corrode and dissolve the metal piping it flows through. This not only damages pipes but can also add harmful metals, such as lead and copper, to the water. For this reason it is beneficial to add chemicals that make the water neutral or slightly alkaline.

This is done by adding any one, or a combination of several, approved chemicals. The [*PWS Name*] adds [*chemical name(s)*] to its water. This adjusts the water to a non-corrosive pH. Testing throughout the water system has shown that this treatment has been effective at reducing lead and copper concentrations.

All chemicals used for coagulation are approved for water treatment by one or of the following organizations: National Sanitation Foundation (Now known as NSF International), or UL, both accredited by the American National Standards Institute (ANSI). Chemicals also have to meet performance standards established by the American Water Works Association (AWWA).

Corrosion Control through Inhibitor Addition

Many drinking water sources in New England are naturally corrosive (i.e., they have a pH of less than 7.0). So, the water they supply has a tendency to corrode and dissolve the metal piping it flows through. This not only damages pipes but can also add harmful metals, such as lead and copper, to the water. For this reason it is sometimes beneficial to add chemicals that can form a protective coating on the inside of pipes.

These chemicals are often referred to as corrosion inhibitors and normally contain small concentrations of either phosphates or silicates. The [*PWS Name*] adds [*chemical name*] to its water. Testing throughout the water system has shown that this treatment has been effective at reducing lead and copper concentrations.

All chemicals used for coagulation are approved for water treatment by one of the following organizations: National Sanitation Foundation (Now known as NSF International), or UL, both accredited by the American National Standards Institute (ANSI). Chemicals also have to meet performance standards established by the American Water Works Association (AWWA).

Corrosion Control through pH Adjustment and Inhibitor Addition

Many drinking water sources in New England are naturally corrosive (i.e., they have a pH of less than 7.0). So, the water they supply has a tendency to corrode and dissolve the metal piping it flows through. This not only damages pipes but can also add harmful metals, such as lead and copper, to the water. For this reason it is beneficial to add chemicals that provide a protective pipe coating and make the water neutral or slightly alkaline.

This is done by adding combinations of water treatment chemicals. The [*PWS Name*] adds [*chemical name(s)*] to its water. [C*hemical name*] is often referred to as an inhibitor and is what coats the inside of the pipe. It contains a small concentration of [*silicate or phosphate*]. [C*hemical name*] raises the water's pH to a non-corrosive level]. Testing throughout the water system has shown that this treatment has been effective at reducing lead and copper concentrations.

All chemicals used for coagulation are approved for water treatment by one of the following organizations: National Sanitation Foundation (Now known as NSF International), or UL, both accredited by the American National Standards Institute (ANSI). Chemicals also have to meet performance standards established by the American Water Works Association (AWWA).

Att. H - Sample SWAP Language

A community public water system's CCR must include:

- Where to obtain a copy of the SWAP Report
- Brief summary of your system's susceptibility from the report

MassDEP recommends that public water suppliers provide additional information to alleviate consumer concerns. The following sample language is provided to help you summarize the Source Water Assessment Program (SWAP) Report for your system in your Consumer Confidence Report (CCR). Replace the items in brackets below with your system-specific information, or you may choose your own format for the summary.

If you are a new system registered after Jan. 1 2005 you will not have had a SWAP report done by MassDEP. You will want to add language to your CCR in effect saying this and give some indication of your own evaluation of the source protection area.

Required

- What Is My System's Ranking?
  A susceptibility ranking of [high, moderate, or low] was assigned to this system using the information collected during the assessment by MassDEP.
- Where Can I See The SWAP Report?
  The complete SWAP report is available [at the water department, Board of Health, or other location] and online at http://www.mass.gov/eea/agencies/massdep/water/drinking/source-water-protection-for-drinking-water-supplies.html . For more information, call [water system contact and phone number].

Optional

- What Is SWAP?
  The Source Water Assessment and Protection (SWAP) program assesses the susceptibility of public water supplies.
- What Are The Key Issues For Our Water Supply?
  The SWAP Report notes the key issues of [key issues from the Discussion section of the SWAP Report] in the water supply protection area for source(s) [names]. The report commends the water system on [existing source protection measures].
- What Can Be Done To Improve Protection?
  The SWAP report recommends:
  - [key recommendations]
  - [key recommendations].
- [The PWS] plans to address the protection recommendations by:
  - [PWS plans]
  - [PWS plans].
- Residents can help protect sources by:
  - [examples: practicing good septic system maintenance,
  - supporting water supply protection initiatives at the next town meeting
  - taking hazardous household chemicals to hazardous materials collection days,
  - contacting the water department or Board of Health to volunteer for monitoring or education outreach to schools,
  - limiting pesticide and fertilizer use, etc.]

Att. I - Sample Cross Connection Language

Community public water systems should include cross connection information in their CCRs. You may want to include it to fulfill your cross-connection education requirement.

Two examples of what you can include are inserted below.

Example 1:

What Is a Cross Connection? What Can I Do about It?

A cross connection is a connection between a drinking water pipe and a polluted source. The pollution can come from your own home. For instance, you're going to spray fertilizer on your lawn. You hook up your hose to the sprayer that contains the fertilizer. If the water pressure drops (say because of fire hydrant use in the town) when the hose is connected to the fertilizer, the fertilizer may be sucked back into the drinking water pipes through the hose. Using an attachment on your hose called a backflow-prevention device can prevent this problem.

The _____ Water Department recommends the installation of backflow prevention devices, such as a low cost hose bib vacuum breaker, for all inside and outside hose connections. You can purchase this at a hardware store or plumbing supply store. This is a great way for you to help protect the water in your home as well as the drinking water system in your town. For additional information on cross connections and on the status of your water system's cross connection program, please contact _____.

Example 2:

Cross-Connection Control and Backflow Prevention

The [*PWS Name*] makes every effort to ensure that the water delivered to your home and business is clean, safe, and free of contamination. Our staff works very hard to protect the quality of the water delivered to our customers from the time the water is extracted via deep wells from underground aquifers or withdrawal point from a surface water source, throughout the

entire treatment and distribution system. But what happens when the water reaches your home or business? There is still a need to protect the water quality from contamination caused by a cross-connection.

What is a cross-connection?
A cross-connection occurs whenever the drinking water supply is or could be in contact with potential sources of pollution or contamination. Cross-connections exist in piping arrangements or equipments that allow the drinking water to come in contact with non-potable liquids, solids, or gases (hazardous to humans) in event of a backflow.

What is backflow?
Backflow is the undesired reverse of the water flow in the drinking water distribution lines. This backward flow of water can occur when the pressure created by equipment or a system, such as a boiler or air-conditioning, is higher than the water pressure inside the water distribution line (backpressure), or when the pressure in the distribution line drops due to routine occurrences such as water main breaks or heavy water demand causing the water to flow backward inside the water distribution system (backsiphonage). Backflow is a problem that many water consumers are unaware of. And every water customer has a responsibility to help prevent them.

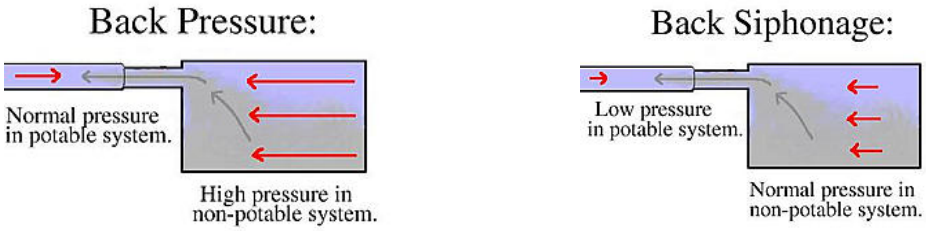

What you can do to help prevent a cross-connection
Without the proper protection something as simple as a garden hose has the potential to contaminate or pollute the drinking water lines in your house. In fact, over half of the country's cross-connection incidents involve unprotected garden hoses. There are very simple steps that you, as a drinking water user, can take to prevent such hazards:

- **Never** submerge a hose in soapy water buckets, pet watering containers, pool, tubs, sinks, drains, or chemicals.
- **Never** attached a hose to a garden sprayer without the proper backflow preventer.
- Buy and install a hose bibb vacuum breaker on every threaded water fixture. The installation can be as easy as attaching a garden hose to a spigot. This inexpensive device is available at most hardware stores and home-improvement centers.
- Identify and be aware of potential cross-connections to your water line.
- Buy appliances and equipment with a backflow preventer.
- Buy and install backflow prevention devices or assemblies for all high and moderate hazard connections.

If you are the owner or manager of a property that is being used as a commercial, industrial, or institutional facility you must have your property's plumbing system surveyed for cross-connection. If your property has NOT been surveyed for cross-connection, contact [PWS Name] to schedule a cross-connection survey.

The Massachusetts Drinking Water Regulations, 310 CMR 22.00, requires all public water systems to have an approved and fully implemented Cross-Connection Control Program (CCCP). The [PWS Name] is working diligently to protect the public health of its drinking water customers from the hazards caused by unprotected cross-connections. We are doing this through the implementation of our cross-connection survey program, elimination or proper protection of all identified cross-connections, the registration of all cross-connections protected by reduced pressure backflow preventers (RPBPs) or double check valve assemblies (DCVAs), and the implementation of a testing program for all RPBPs and DCVAs.

The following chart shows how the [PWS Name]'s CCCP is being implemented:

Cross-connection Surveys Information

Type of Facilities	Total # Facilities Served	# Facilities Surveyed for Cross-connection	# Facilities Remaining to be Surveyed for Cross-connection	# Facilities Surveyed for the First Time in [year]	# Facilities Re-surveyed in [year]
Commercial					
Industrial					
Institutional					
Municipal					

Backflow Prevention Devices and Assemblies Testing Information

Type of Backflow Preventer	# Devices or Assemblies	Test Frequency	Total # of Routine Test	# Test Failures	# Re-test
RPBP		Semi-annual*			
DCVA		Annual*			
PVB (if applicable)		Annual **			

* Required frequency ** Recommended

If you have any questions, please contact [*PWS Staff Name*] at _____-_____-_____.

Some Examples of Common Cross-connections

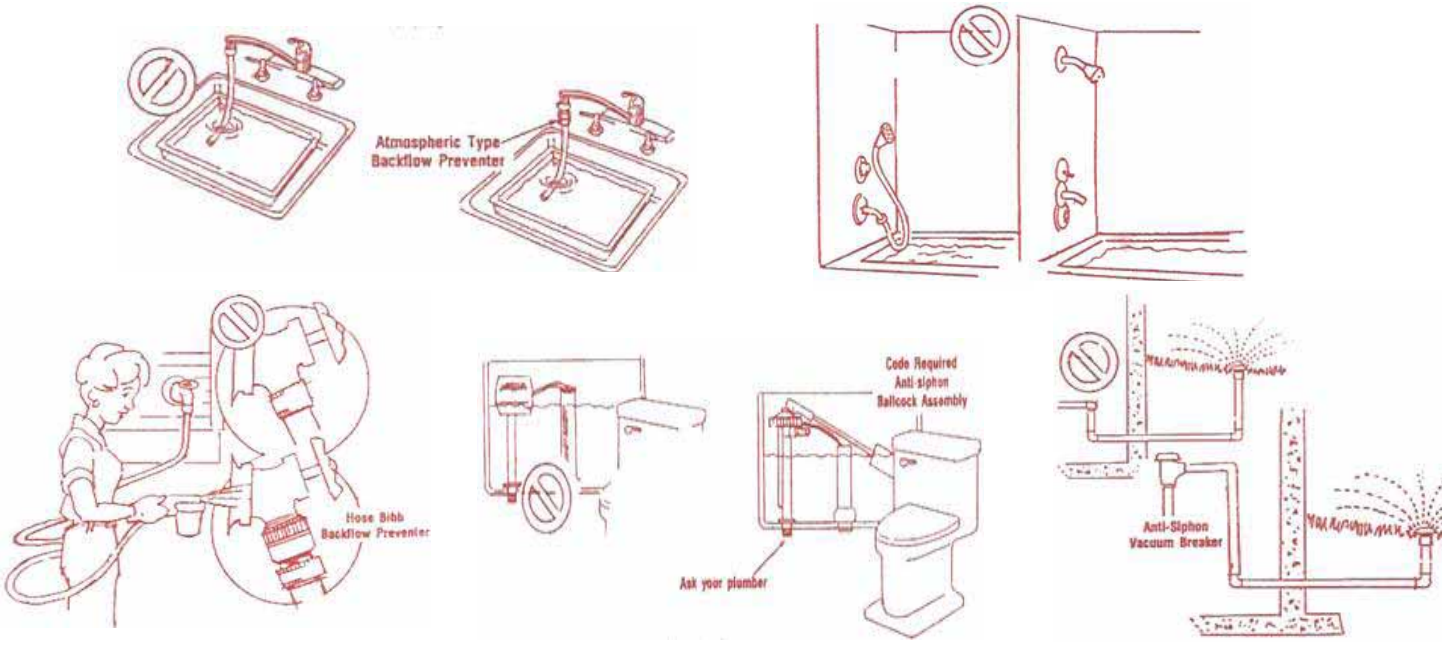

Att. J - Using Environmentally Friendly Materials

As this CCR is an environmental report developed to inform the public, you may want to consider the use of environmentally preferable materials in printing up the report. This is a statement to the public that you, and they, can take actions to help protect drinking water. You may want to add a statement to the bottom of the report that highlights whichever environmental features you choose. This is just one way to show your community the numerous efforts you undertake to provide them with the highest quality water and to emphasize that personal action can make a difference. We recommend that you consider the following ways to make your report environmentally preferable:

Paper

Paper with a high percentage of recycled fibers is the first and easiest place to start. The most important thing to look for is the level of post-consumer content. In general, at virtually any print shop, you should be able to use 30 percent post-consumer paper for only a small fraction more than regular paper and this is the minimum standard used by the federal government and several states, including Massachusetts. One hundred percent post-consumer recycled paper is also readily available; however, this will cost more. Since paper is usually only about 20% of the total cost of a print job, we recommend you use paper with the highest post-consumer recycled content your budget allows.

As the bleach used to make paper white can cause water pollution, and are known to be some of the more toxic drinking water contaminants, we recommend the use of paper which is "process-chlorine free," or PCF, which is available at many print shops for a small charge. You may also want to consider using "tree-free" paper, such as paper from kenaf, since this material needs significantly fewer chemicals to process and is a much more sustainable natural resource than the cutting down of trees.

Ink

Using soy based inks are preferable to petroleum based inks, and are generally available in the basic colors at similar prices. Ask your printer for soy ink availability and cost.

Education

Letting the public know that you are using environmentally preferable products is important. Make sure your printer places a recycled logo and the words "printed on recycled paper" if you use recycled content paper. In addition, if you are using PCF paper or soy inks, you can put that on your document as well. There is also no harm in identifying the actual recycled content (e.g. 30% post-consumer content) if you so desire.

Mailing

If possible, consolidate your report into a billing or a newsletter mailing. Not only will this save paper and energy, but also it will be less costly.

Att. K - Language Translation Requirements per City/Town

City/Town	Languages for complete CCR Translation	
Chelsea	Spanish	
Lawrence	Spanish	

City/Town	Languages info statement on the importance of CCR	
Barnstable	Portuguese	
Boston	Arabic	Chinese
	French	Italian
	Portuguese	Russian
	Spanish	Vietnamese
Brockton	French	Portuguese
	Spanish	
Brookline	Chinese	Russian
Cambridge	Chinese	French
	Spanish	
Chicopee	Polish	Spanish
Dartmouth	Portuguese	
Everett	French	Portuguese
	Spanish	
Fall River	Portuguese	Spanish
Fitchburg	Spanish	
Framingham	Portuguese	Spanish
Haverhill	Spanish	
Holyoke	Spanish	
Hudson	Portuguese	
Leominster	Spanish	
Lowell	Mon-Khmer	Portuguese
	Spanish	Vietnamese
Ludlow	Portuguese	
Lynn	Mon-Khmer	Spanish
	Russian	

City/Town	Languages info statement on the importance of CCR	
Malden	Chinese	French
	Portuguese	Spanish
Marlborough	Portuguese	Spanish
Medford	Portuguese	
Methuen	Spanish	
Milford	Portuguese	
New Bedford	Portuguese	Spanish
Newton	Chinese	Russian
Peabody	Portuguese	
Quincy	Chinese	Vietnamese
Randolph	French	
Revere	Arabic	Portuguese
	Spanish	
Salem	Spanish	
Somerville	Portuguese	Spanish
Southbridge	Spanish	
Springfield	Spanish	Vietnamese
Stoughton	Portuguese	
Taunton	Portuguese	
Waltham	Spanish	
West Springfield	Russian	
Worcester	Chinese	Portuguese
	Spanish	Vietnamese

Info Statement on the Importance of a CCR:

The following statement may be used as your info statement language requirement:
"This report contains very important information about your drinking water. Please translate it, or speak with someone who understands it."

Please translate that statement into the needed languages and place in your CCR.

Note: Washington State Department of Health's website has published translations of the above statement in many languages. Their website is:
http://www.doh.wa.gov/CommunityandEnvironment/DrinkingWater/DrinkingWaterEmergencies/PublicNotification/TranslationsforPublicNotification.aspx

However, MassDEP makes no claims about the correctness or validity of these translations.

Att. L - Preparing for Your Report

Preparing for your report is easier if you start early and gather together the following documents:

☐ Your current and previous MassDEP-issued sampling schedules

☐ Most recent lab reports and correspondence for the following regulated contaminant groups (in some cases going back as far as 5 years)

Bacteria	VOC	IOC	SOC	Turbidity
Nitrate/Nitrite	Asbestos	Radionuclides	Lead/copper	
Disinfection chemicals and byproducts				

☐ Any additional sampling data collected for unregulated contaminants, especially those with state health guidelines (such as MTBE, radon, and sodium) or state secondary maximum contaminant levels (SMCL) (such as iron, manganese, and sulfate).

☐ Information about monitoring waivers you have received from MassDEP for any IOCs, VOCs, or SOCs.

☐ All notices of noncompliance and other drinking water enforcement documents such as Public Notices issued or still in effect during the previous calendar year.

☐ Your last CCR, Sanitary Survey, and Annual Statistical Report for reference purposes.

☐ Updated water system contact information, as well as details about meetings and other ways customers can participate in decisions about their water.

☐ Current Appendix M with attachments ("Tips" document may also aid you) from the MassDEP website at http://www.mass.gov/eea/docs/dep/water/ccrguide.pdf .

☐ Your system's Source Water Assessment and Protection (SWAP) report, which was prepared for your system by MassDEP. If you can't locate your report, you can find it posted on the web at http://www.mass.gov/eea/agencies/massdep/water/drinking/source-water-protection-for-drinking-water-supplies.html#5. If you are a new system registered after Jan. 1 2005 you will not have had a SWAP report done by MassDEP. You will want to add language to your CCR in effect saying this and give some indication of your own evaluation of the source protection area.

☐ Any deficiency reports for past CCRs that were audited by MassDEP. Make sure that any errors or issues raised in the deficiency reports are corrected in your current report.

Other Items You May Want to Include in Your CCR

☐ List the changes and improvements you have made over the past year. Your CCR is an ideal place to communicate with your customers an let them know about new water related by-laws, rate changes, and improvements you've made to the system.

☐ Information for customers to fulfill your requirements for Tier 3 Public Notification (PN). If you choose to use your CCR for PN, you must mail or hand deliver your CCR to customers within 12 months of the time your system first learned of the violation. (For more guidance on PN go to http://www.mass.gov/eea/agencies/massdep/water/drinking/water-systems-ops.html#20).

- [ ] A list of dos and don'ts for your customers to help educate them about water conservation, cross connections in the home, and source protection among other topics you choose to address.

Att. M - Compliance Checklist for Your CCR

Use this form as a guide when assembling your CCR. You do not have to mail this into MassDEP. It is for your own use in checking to see that you have included the compliance items in your CCR.

Task	Done
Contents of CCR Did CCR contain:	
1) required water system information ▪ PWSID number, system name and name of town ▪ name and telephone number of a contact person ▪ information for non-English speaking persons (if required) ▪ information on public participation opportunities ▪ information on sanitary survey deficiencies	
2) information on sources of water ▪ type, ID#, common name, and location of water sources ▪ source water assessment information, if available ▪ treatment information (if required)	
3) required definitions ▪ MCL, MCLG ▪ TT, AL, MDRL, MDRLG, ORSG, SMCL, Variances and Exemptions, (if applicable)	
4) reporting levels of detected contaminants ▪ include all detects from the most recent round of DEP-required sampling for all contaminants (up to 5 years old) ▪ include data statement: data presented in table(s) is from the most recent round of testing done in accordance with the regulations ▪ highest contaminant level used to determine compliance ▪ MCL and MCLG ▪ range of levels found ▪ description of likely sources ▪ date of sample ▪ if a violation occurred, it is clearly labeled and the required health effects language is included ▪ for lead and copper, 90th percentile level, action levels, and number of sites exceeding the action level ▪ for coliform, the highest number or percent of positive samples collected in any one month for systems collecting fewer than 40 samples ▪ for fecal coliform or *E.coli*, the total number of positive samples ▪ for unregulated contaminants, the result or range detected ▪ include information on monitoring waivers	
5) required language ▪ explanation of contaminants which may be reasonably expected to be found in drinking water (exact wording required) ▪ explanation of the vulnerability of some populations to contaminants in drinking water (exact wording required) ▪ information on sources of drinking water, contaminants that may be present and Lead educational statement ▪ informational statements on arsenic, nitrate, and total trihalomethanes, if those contaminants are detected under conditions prescribed in the rule ▪ information on *Cryptosporidium*, radon, and other unregulated contaminants	
6) information on drinking water violations such as: ▪ exceedances of MCLs, TT, MRDLs, or Als	

▪ monitoring and reporting of compliance data ▪ record keeping of compliance data ▪ filtration and disinfection ▪ lead and copper requirements ▪ treatment techniques for acrylamide and epichlorohydrin ▪ special monitoring requirements for inorganic and organic contaminants and sodium ▪ violation of the terms of variance, exemption, or a State or Federal administrative or judicial order	
for these violations the report must contain: ▪ explanation of violations, length of violation, potential health effects, and steps the PWS has taken to correct the violation	
7) required information if PWS is operating under a variance or exemption	
8) other MassDEP specific information ▪ information on drinking water ACOs or UAOs (if required) ▪ information on sodium, MTBE, and fluoride	
Report Delivery and Record Keeping Did PWS complete ALL of the following distribution requirements by July 1 ▪ deliver one copy of the CCR, certification form, and attachments to your MassDEP regional office ▪ deliver one copy of the CCR, certification form, and attachments to the MassDEP Boston office ▪ deliver the CCR and certification form to your local board of health and the Massachusetts Department of Public Health ▪ deliver the CCR to customers or meet all the terms of the mailing waiver (see below) ▪ in addition to required delivery methods- use at least 3 "good faith" efforts to reach non-billed consumers ▪ make CCR available to the public upon request ▪ post CCR on the Internet if serving 100,000 or more persons (any system can post their CCR to EPA's website at http://yosemite.epa.gov/ogwdw/ccr.nsf/CCR?OpenForm)	
Did the certification indicate and ensure that: ▪ CCR was distributed to customers ▪ CCR contained information correct and consistent with compliance monitoring data previously submitted to MassDEP	
▪ The certification form is signed	
Systems with mailing waivers serving fewer that 10,000 persons: ▪ publish CCR in at least one local newspaper ▪ notify customers that CCR will not be mailed ▪ make CCR available to the public upon request serving fewer that 500 persons: ▪ provide notice to customers at least once during the year that the CCR will not be mailed, and is available to the public upon request	

Att. N - Request for Language Changes

Department of Environmental Protection

Request for CCR Language Changes

Submit this signed form to your regional MassDEP office.

PWS Name:	PWS ID#:
Address:	
Date:	Submitted by:
Signature:	

EPA Required Statements	Your Requested Comparable Language:
<u>Basic Information about Drinking Water:</u> *The sources of drinking water (both tap water and bottled water) include rivers, lakes, streams, ponds, reservoirs, springs, and wells. As water travels over the surface of the land or through the ground, it dissolves naturally occurring minerals and, in some cases, radioactive material, and can pick up substances resulting from the presence of animals or from human activity.*	
<u>Information about contaminant types and potential sources of contamination.</u> Contaminants that may be present in source water include: ***Microbial contaminants****, such as viruses and bacteria, which may come from sewage treatment plants, septic systems, agricultural livestock operations, and wildlife.* ***Inorganic contaminants,*** *such as salts and metals, which can be naturally-occurring or result from urban stormwater runoff, industrial or domestic wastewater discharges, oil and gas production, mining, and farming* ***Pesticides and herbicides,*** *which may come from a variety of sources such as agriculture, urban stormwater runoff, and residential uses.* ***Organic chemical contaminants,*** *including synthetic and volatile organic chemicals, which are by-products of industrial processes and petroleum production, and can also come from gas stations, urban stormwater*	

runoff, and septic systems. ***Radioactive contaminants,*** *which can be naturally occurring or be the result of oil and gas production and mining activities.*	
Information on MassDEP and EPA regulations as they pertain to drink water and bottled water: *In order to ensure that tap water is safe to drink, the MassDEP and EPA prescribe regulations that limit the amount of certain contaminants in water provided by public water systems. The Food and Drug Administration (FDA) and the Massachusetts Department of Public Health (DPH) regulations establish limits for contaminants in bottled water that must provide the same protection for public health.*	
Lead Language: *If present, elevated levels of lead can cause serious health problems, especially for pregnant women and young children. Lead in drinking water is primarily from materials and components associated with service lines and home plumbing. [NAME OF UTILITY] is responsible for providing high quality drinking water, but cannot control the variety of materials used in plumbing components. When your water has been sitting for several hours, you can minimize the potential for lead exposure by flushing your tap for 30 seconds to 2 minutes before using water for drinking or cooking. If you are concerned about lead in your water, you may wish to have your water tested. Information on lead in drinking water, testing methods, and steps you can take to minimize exposure is available from the Safe Drinking Water Hotline or at http://www.epa.gov/safewater/lead.*	
Other:	

Submit this signed form to your regional MassDEP office.

MassDEP use only:

Comments:

Approved: ☐Yes ☐No	Staff Name:
	Date:

rev. 9-2009

Att. O - Sample CCR

2008 Water Quality Report
Swiftville Water District
Swift Falls, Massachusetts
PWS ID#5420000

This brochure is a snapshot of the quality of the water that we provided last year. Included are details about where your water comes from, what it contains, and how it compares to Environmental Protection Agency (EPA) and state standards. We are committed to providing you with information because informed customers are our best allies. For more information about your water, call Joe Sampson, Water Superintendent, at 617-555-5309.

Last year, we conducted more than 500 tests for over 80 drinking water contaminants. We only detected 7 contaminants, and found only atrazine at a level higher than the state allows. As we told you in a letter at the time, our water was temporarily unsafe. For more information, see the paragraph on the last page of this report marked "**Violation"**.

Your water comes from three municipal wells sunk about 500 feet into an underground source of water called the Low Plain Aquifer. These wells are located west of town on Main Street, behind the municipal garage. The town owns the land around these wells and restricts **any** activity that could contaminate them.

After the water comes out of the wells, we treat it to remove several contaminants and we also add disinfectant to protect you against microbial contaminants.

Our Water Board meets on the first Tuesday of each month at 7:30 pm in the Town Hall. Please feel free to participate in these meetings.

Some people may be more vulnerable to contaminants in drinking water than the general population. Immuno-compromised persons such as persons with cancer undergoing chemotherapy, persons who have undergone organ transplants, people with HIV/AIDS or other immune system disorders, some elderly, and infants can be particularly at risk from infections. These people should seek advice about drinking water from their health care providers. EPA/CDC guidelines on appropriate means to lessen the risk of infection by *Cryptosporidium* and other microbial contaminants are available from the Safe Drinking Water Hotline (800-426-4791).

In order to ensure that tap water is safe to drink, the Massachusetts Department of Environmental Protection (MassDEP) and EPA prescribe regulations that limit the amount of certain contaminants in water provided by public water systems. The US Food and Drug Administration and the MA

Department of Public Health regulations establish limits for contaminants in bottled water that must provide the same protection for public health.

Drinking water, including bottled water, may reasonably be expected to contain at least small amounts of some contaminants. The presence of contaminants does not necessarily indicate that water poses a health risk. More information about contaminants and potential health effects can be obtained by calling EPA's Safe Drinking Water Hotline (800-426-4791)

If present, elevated levels of lead can cause serious health problems, especially for pregnant women and young children. Lead in drinking water is primarily from materials and components associated with service lines and home plumbing. The Smithville Water District is responsible for providing high quality drinking water, but cannot control the variety of materials used in

plumbing components. When your water has been sitting for several hours, you can minimize the potential for lead exposure by flushing your tap for 30 seconds to 2 minutes before using water for drinking or cooking. If you are concerned about lead in your water, you may wish to have your water tested. Information on lead in drinking water, testing methods, and steps you can take to minimize exposure is available from the Safe Drinking Water Hotline or at http://www.epa.gov/safewater/lead.

The sources of drinking water (both tap water and bottled water) include rivers, lakes, streams, ponds, reservoirs, springs, and wells. As water travels over the surface of the land or through the ground, it dissolves naturally occurring minerals and, in some cases, radioactive material, and can pick up substances resulting from the presence of animals or from human activity.

Contaminants that may be present in source water before we treat it include:

Microbial contaminants, such as viruses and bacteria, which may come from sewage treatment plants, septic systems, agricultural livestock operations and wildlife.

Inorganic contaminants, such as salts and metals, which can be naturally occurring or result from urban storm water runoff.

Pesticides and herbicides, which may come from a variety of sources such as agriculture, and residential uses.

Radioactive contaminants, are naturally occurring.

Organic chemical contaminants, including synthetic and volatile organic chemicals, which are by-products of industrial processes and petroleum production, and can also come from gas stations, urban storm water runoff, and septic systems.

WATER QUALITY DATA

The following table lists all the drinking water contaminants that we detected during the 2000 calendar year or during the most recent sampling period within the past five years. These were the only contaminants detected in all the monitoring required by the state. The presence of these contaminants in the water does not necessarily indicate that the water poses a health risk. Unless otherwise noted, the data presented in this table is from testing done January 1-December 31, 2000. The state requires us to monitor for certain contaminants less than once per year because the concentrations of these contaminants are not expected to vary significantly from year to year. Some of the data, though representative of the water quality, is more than one year old.

Our system has had our monitoring requirements for synthetic organic compounds (SOCs) reduced by MassDEP to less than once per year because the source is not at risk of contamination. The last SOC sample was collected on 3/16/99 and was found to be free of this contaminant.

Terms & abbreviations used in the table:

• **Maximum Contaminant Level Goal** (MCLG): the level of a contaminant in drinking water below which there is no known or expected risk to health. MCLGs allow for a margin of safety.

• **Maximum Contaminant Level** (MCL): the highest level of a contaminant that is allowed in drinking water. MCLs are set as close to the MCLGs as feasible using the best available treatment technology.

• **Action Level** (AL): the concentration of a contaminant which, if exceeded, triggers treatment or other requirements which a water system must follow.

• **n/a**: not applicable

• **nd**: not detectable at testing limit

• **ppm**: parts per million or milligrams per liter

• **ppb**: parts per billion or micrograms per liter

• **pCi/l**: picocuries per liter (a measure of radiation

)

Regulated Contaminants

Inorganic Contaminants	MCL	MCLG	Detections	Range of detections	Sample Date	Violation	Typical Source of Contaminant
Fluoride (ppm) -	4 [1]	4	0.98		2/10/10		water additive which promotes strong teeth
Nitrate as nitrogen (ppm)	10	10	6	ND-9	7/19/10		runoff from fertilizer use
Organic Chemical Contaminants							
Atrazine (ppb)	3	3	3.275	0.1-10	See below	YES	runoff from herbicide used on row crops
Total Trihalomethanes (TTHMs) (ppb)	100	n/a	73	40-135	2/15/10, 5/09/10, 7/19/10, 11/12/10		by-product of drinking water chlorination
Radionuclides							
Beta/photon emitters (pCi/L)	50 [2]	0	10		5/7/08 [3]		erosion of natural deposits

Lead	AL	MCLG	Detections at 90th percentile level [4]	# of sites found above the AL	Typical Source of Contaminant
Lead (ppb)	15	0	2	1 site above AL out of 20 sites	sampled corrosion of household plumbing systems

Unregulated Contaminants

Chloromethane (ppb)	not regulated	0.07	May 1995 EPA regulations require us to monitor this contaminant while EPA considers setting a limit on it.

[1] Fluoride also has a secondary maximum contaminant level (SMCL) of 2 ppm to better protect human health.
[2] The MCL for beta particles is 4 mrem/year. EPA considers 50 pCi/l to be the level of concern for beta particles.
[3] MassDEP only requires our system to sample for radionuclides every 3 years.
[4] EPA requires that at least 90% of the sampled homes have lead levels under 15 ppb (the action level). The 90th percentile value represents the highest concentration found in 90% of the homes sampled.

About nitrate: Nitrate in drinking water at levels above 10 ppm is a health risk for infants of less than six months of age. High nitrate levels in drinking water can cause blue baby syndrome. Nitrate levels may rise quickly for short periods of time because of rainfall or agricultural activity. If you are caring for an infant, you should ask for advice from your health care provider.

Is our water system meeting other rules that govern our operations?
The state and EPA require us to test our water on a regular basis to ensure its safety. In February and May of this year, we received monitoring violations for nitrite and volatile organic compounds (VOCs). We took the samples at the required time but failed to submit the results of this monitoring to the state in a timely manner. At no time was a health threat present in the water. We are reviewing our procedures to ensure that this paperwork will be submitted in a timely manner in the future.

Violation: About our atrazine violation: During March, April, and May, a big surge in the use of atrazine-based herbicides by area farmers caused our water to exceed the MCL for atrazine. We sent a notice warning you of this problem when it occurred. We are working with the state and local farmers to ensure that this never happens again, and we are monitoring

atrazine levels monthly. We regret exposing you to any potential risk. You should know that some people who drink water containing atrazine well in excess of the MCL over many years could experience problems with their cardiovascular system or reproductive difficulties. If you want more information about atrazine or the violation, please call us (617-555-5309), Smithville County's health department (617-555-4444), or the state drinking water office (853-555-3333).

Information on Protecting Your Water

The Source Water Assessment and Protection (SWAP) program assesses the susceptibility of public water supplies. A susceptibility ranking of moderate was assigned to this system using the information collected during the assessment by MassDEP in April 1995.

The complete SWAP report is available at the water department and online at http://www.mass.gov/dep/water/drinking/sourcewa.htm#reports. For more information, call Adam West at 436-555-3434.

The SWAP Report notes the key issues of parking lots that are close to the well in the water supply protection area for the well #2. The SWAP report recommends that when the new municipal garage is built, to locate parking lots further away from the source.

Residents can help protect sources by practicing good septic system maintenance, supporting water supply protection initiatives at the next town meeting, taking hazardous household chemicals to hazardous materials collection days, contacting the water department or Board of Health to volunteer for monitoring or education outreach to schools, and by limiting pesticide and fertilizer use.

Cross-Connection Control and Backflow Prevention

The Swiftville Water System makes every effort to ensure that the water delivered to your home and business is clean, safe, and free of contamination. Our staff works very hard to protect the quality of the water delivered to our customers from the time the water is extracted via deep wells from underground aquifers or withdrawal point from a surface water source, throughout the entire treatment and distribution system. But what happens when the water reaches your home or business? There is still a need to protect the water quality from contamination caused by a cross-connection.

What is a cross-connection?

A cross-connection occurs whenever the drinking water supply is or could be in contact with potential sources of pollution or contamination. Cross-connections exist in piping arrangements or equipments that allow the drinking water to come in contact with non-potable liquids, solids, or gases (hazardous to humans) in event of a backflow.

What is backflow?

Backflow is the undesired reverse of the water flow in the drinking water distribution lines. This backward flow of water can occur when the pressure created by equipment or a system, such as a boiler or air-conditioning, is higher than the water pressure inside the water distribution line (backpressure), or when the pressure in the distribution line drops due to routine occurrences such as water main breaks or heavy water demand causing the water to flow backward inside the water distribution system (backsiphonage). Backflow is a problem that many water consumers are unaware of. And every water customer has a responsibility to help prevent them.

What you can do to help prevent a cross-connection

Without the proper protection something as simple as a garden hose has the potential to contaminate or pollute the drinking water lines in your house. In fact, over half of the country's cross-connection incidents involve unprotected garden hoses. There are very simple steps that you, as a drinking water user, can take to prevent such hazards:

- **Never** submerge a hose in soapy water buckets, pet watering containers, pool, tubs, sinks, drains, or chemicals.
- **Never** attached a hose to a garden sprayer without the proper backflow preventer.

- Buy and install a hose bibb vacuum breaker on every threaded water fixture. The installation can be as easy as attaching a garden hose to a spigot. This inexpensive device is available at most hardware stores and home-improvement centers.
- Identify and be aware of potential cross-connections to your water line.
- Buy appliances and equipment with a backflow preventer.
- Buy and install backflow prevention devices or assemblies for all high and moderate hazard connections.

Call Karen Shrute at 657-555-3435 for more information about cross connections or for a free hose bibb vacuum breaker.
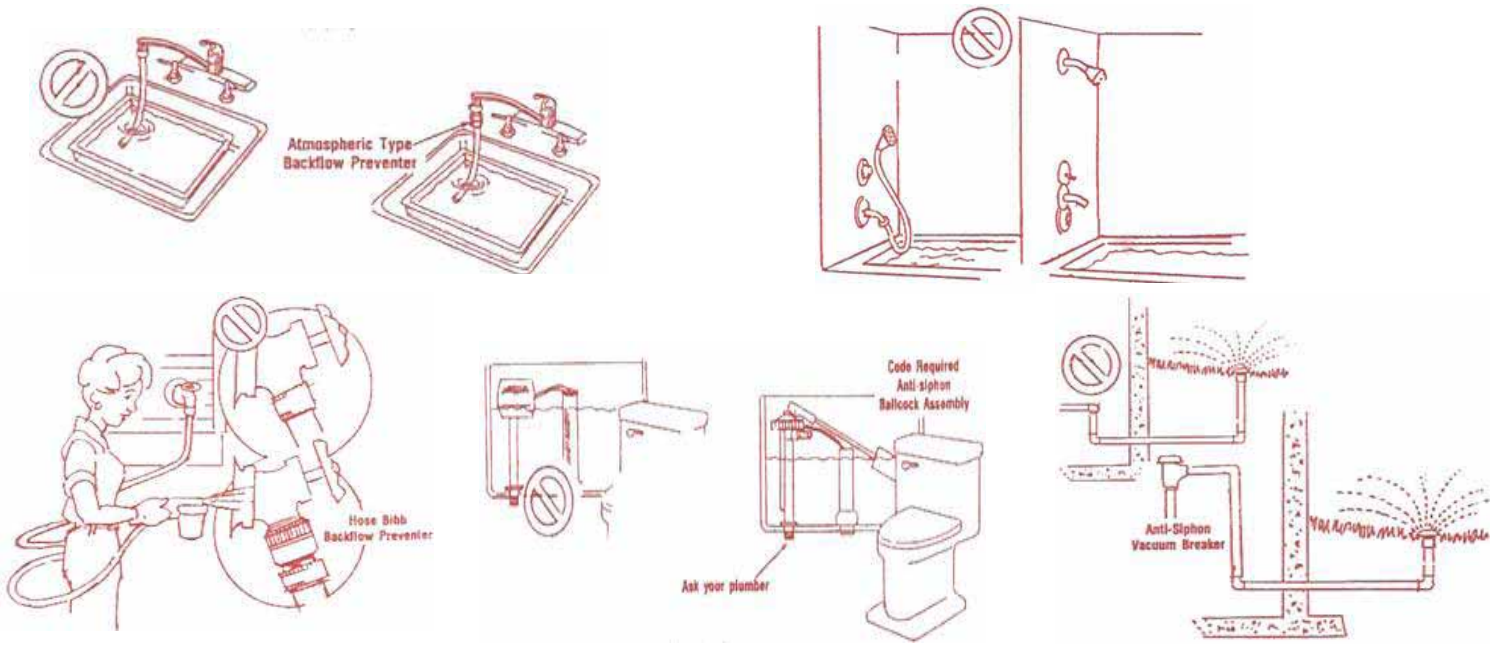
Some Examples of Common Cross-connections