Massachusetts Weatherization Field Guide SWS-Aligned Edition

Primary author: John Krigger
Illustrators: John Krigger, Bob Starkey, Steve Hogan, Wayne Harney, Darrel Tenter
Technical publisher: Darrel Tenter
Editors: Darrel Tenter, Timmie Smart, and Mary Coster

The *Massachusetts Weatherization Field Guide* describes procedures used to analyze and improve the performance of existing homes retrofitted under the Department of Energy's Weatherization Assistance Program. This field guide is cross referenced to DOE's Standard Work Specifications for Home Energy Upgrades: March 2013 edition.

The author recognizes the knowledge, ingenuity, and creativity of the weatherization network throughout the United States for pioneering, changing, and perfecting the standards, specifications and procedures documented in this field guide.

Massachusetts Technical Reviewers:
Jamie Canning, David Fuller, Robert Guenthner and Paul Jackson

Copyright 2015 by

Saturn Resource Management, Inc.

Version 033115

Acknowledgments

We are Saturn Resource Management of Helena Montana. Our content expertise is energy conservation for buildings. We publish documents, create curricula, implement training, and consult.

We thank the Department of Energy's Weatherization Assistance Program (WAP) for promoting residential energy efficiency for more than 35 years. Without the DOE, our industry wouldn't exist as a building-science-based endeavor.

Weatherization agencies, State WAP grantees, private contractors, national laboratories, utility companies, and non-profit corporations have also contributed much to the content in this guide.

For many years, we've tried to list the specific people who have influenced Saturn's work in a substantial way. Now there are just too many contributors to list. You know who you are: thank you.

WAP energy specialists and energy experts associated with WAP are our most important contributors. Saturn's present and past staff have done a fine job of compiling the information in this field guide. Thanks to everyone who has reviewed this field guide and labored to improve it. Thank you, past-and-present customers, for allowing Saturn the privilege of serving you. We appreciate your business.

Preface

This Weatherization Field Guide outlines a set of best practices for the Weatherization Assistance Program (WAP). Weatherization experts collaborating with the National Renewable Energy Lab (NREL) developed the Standard Work Specifications (SWS) beginning in 2009. These new SWS standards reside online in *NREL's SWS Tool.*

The SWS presents details and outcomes for weatherization measures that are required when a weatherization agency selects a weatherization measure, based on its cost effectiveness. The technical content of this guide aligns with the SWS requirements.

A major purpose of this guide is to show how its contents are aligned with the SWS. Therefore, we've inserted hypertext references to the specific SWS details that our content aligns to. When you click on one of these references, the relevant detail appears in your browser.

This guide also incorporates information from the following standards and specifications.

- DOE Weatherization Job Task Analysis (2013)
- Building Performance Institute's (BPI) relevant standards
- WAP Policy Directives from 2005 to 2013
- International Residential Code 2012
- International Energy Conservation Code 2012
- Standards for combustion systems by The National Fire Protection Association (NFPA) 2009 editions, including NFPA 54, 31, and 211
- International Mechanical Code 2009

We begin this guide with health and safety, an important topic for both workers and clients. The first part of the chapter dis-

cusses client health and safety. The last part of the chapter covers worker health and safety.

Next, the guide presents a chapter on energy auditing, inspecting, customer relations, and work flow development. The following chapter discusses insulation and air sealing materials and their characteristics. We follow that with four chapters on the four distinct parts of the building shell: attics and roofs; walls; floors and foundations; and windows and doors.

The guide's largest chapter is heating and cooling. We created a separate chapter on ventilation, which includes whole-house ventilation, local ventilation, attic and crawl-space ventilation, and ventilation for cooling.

We've included a dedicated chapter on mobile homes where we discuss the ECMs particular to mobile homes. In this chapter we often refer to other sections of the guide that contain information that's relevant to both mobile homes and site-built homes.

The last chapter's topic, Air Leakage Diagnosis, is an effective tool for weatherization agencies to guide cost-effective air sealing. This chapter doesn't align to the SWS because the SWS doesn't detail testing procedures.

Like the SWS, this field guide is a living document and a work-in-progress. The field guide will change as the SWS changes. We hope you find this guide authoritative, easy to use, and well aligned to the SWS. We welcome all comments, suggestions and criticism. Thanks for your hard work and dedication in implementing the Weatherization Assistance Program.

John Krigger
jkrigger@srmi.biz

Table of Contents

1: Health and Safety

Fire Safety 20

Carbon Monoxide (CO) 21
- Causes of Carbon Monoxide (CO) 22

Smoke and Carbon Monoxide (CO) Alarms 23
- Smoke Alarms 23
- CO Alarms 24

Gas Range and Oven Safety 25

Reducing Moisture Problems 28
- Symptoms of Moisture Problems 30
- Solutions for Moisture Problems 31
- Crawl Space Moisture and Safety Issues 35
- Ground Moisture Source-Reduction 36

Pollutants Source Control 37
- Radon 37
- Asbestos Containing Materials (ACM) 38
- Lead-Safe Procedures 39

Electrical Safety 43
- Decommissioning Knob-and-Tube Wiring 44
- Constructing Shielding for Knob-and-Tube Wiring 45

Worker Health and Safety 46
- Commitment to Safety 47
- New Employees 48
- Driving 49
- Lifting and Back Injuries 50
- Respiratory Health 52
- Hazardous Materials 53
- Equipment for Personal and Crew Safety 54
- Falls 54
- Tool Safety 56

Repetitive Stress Injuries 57
Safety for Crawl Spaces and Other Confined Areas 58
Safety for Extreme Weather 59

SWS Alignment 60

2: Energy Audits and Quality Control Inspections

Purposes of an Energy Audit 65
Energy-Auditing Judgment and Ethics 66
Weatherization-Client Record-Keeping 67

Customer Relations 68
Communication Best Practices 68
Customer Interview 69
Deferral of Weatherization Services 70

Parts of an Energy Audit 71
Visual Inspection 72
Diagnostic Testing 72
SIR Calculations with Weatherization Assistant 73

The Work Order 74
Questions about the Audit and Work Order 74

Work Inspections 75
In-Process Inspections 75
Final Inspections 76
Quality Control Versus Quality Assurance 77

Field Monitoring 77

Understanding Energy Usage 78
Baseload Versus Seasonal Use 78
Energy Indexes 81

Customer Education 82
SWS Alignment 82

3: Weatherization Materials

Air-Sealing Goals 85
Air Sealing Safety 86
Air Sealing and Fire Containment 87
Air Sealing Materials 88
Air Barrier Materials 89
Stuffing Materials 90
Caulking and Adhesives 91
Liquid Foam Air Sealant 93
Insulation Building Science 95
Insulation Material Characteristics 96
Fibrous Insulation Materials 97
Operating the Insulation Blowing Machines 101
Spray Foam Insulation Materials 102
Fire Protection for Foam Insulation 104
Foam Board Insulation 104
Insulation Safety and Durability 107
Insulation Durability 107
SWS Alignment 109

4: Attics and Roofs

Air-Sealing Attics and Roofs 113
Sealing around Manufactured Chimneys 113
Sealing around Fireplaces and Chimneys 114
Air Sealing Recessed Lights 115
Sealing Stairways to Unconditioned Attics 118
Sealing Porch Roof Structures 119
Removing Insulation for Attic Air Sealing 120
Sealing Joist Cavities Under Knee Walls 121

Sealing Kitchen or Bathroom Interior Soffits 121
Sealing Two-Level Attics 122
Sealing Suspended Ceilings 123

Insulating Attics and Roofs 125
Preparing for Attic Insulation 126
Safety Preparations for Attic Insulation 127
Blowing Attic Insulation 131
Closed-Cavity Attic Floors 133
Insulating Closed Roof Cavities 134
Exterior Rooftop Foam Insulation 137
Installing Fiberglass Batts in Attics 138
Cathedralized Attics (Open Cavity) 138
Vaulted Attics 140
Finished Knee Wall Attics 141
Knee Wall Insulation 144
Access Doors in Vertical Walls 145
Walk-Up Stairways and Doors 147
Insulating & Sealing Pull-Down Attic Stairways 148
Parapet Walls 149
Skylights 149
Whole-House Fans 150

SWS Alignment 151

5: Walls

Air Sealing Walls 157
Built-In Cabinets/Shelves 157
Wall Framing Around Fireplaces and Chimneys 158
Pocket Door Cavities 159
Cooling Appliances Installed through Walls or Windows 159
Balloon Framed Walls 160

Minor Air Sealing 162
Window and Door Frames 162
Rim Joist Area 163
Masonry Surfaces 163

Interior Wall Top Plates 163

Wall Insulation 164
Wall Insulation: Preparation and Follow-up 165
Retrofit Closed-Cavity Wall Insulation 169
Open-Cavity Wall Insulation 173
Insulated Wall Sheathing 176
Wall Insulation in a Retrofitted Frame Wall 178
Insulating Unreinforced Brick Walls 178

SWS Alignment 179

6: Floors and Foundations

Thermal-Boundary Decisions: Floor or Foundation 183

Air Sealing Foundations and Floors 185
Plumbing Penetrations 185
Stairways to Unconditioned Areas 186
Incomplete Finished Basements 189
Cantilevered Floors 189

Preparing for Foundation or Floor Insulation 190
Rim-Joist Insulation and Air-Sealing 191
Installing Floor Insulation 192
Installing Fiberglass Batt Floor Insulation 194
Crawl-Space Wall Insulation 196
Basement Insulation 199

SWS Alignment 203

7: Windows and Doors

Storm Windows 207
Exterior Aluminum Storm Windows 207
Interior Storm Windows 209

Window Repair and Air Leakage Reduction 210
Double-Hung Window Weatherization 210
Weatherstripping Double-Hung Windows 211

Window Replacement Specifications 213
Window Energy Specifications 214
Removing Old Windows 215
Installing Replacement Windows 215
Replacing Nailing-Fin Windows 216
Block-Frame or Finless Windows 218
Flush-Fin Window Replacement 221

Window Safety Specifications 222
Windows Requiring Safety Glass 222
Fire Egress Windows. 225

Door Replacement and Improvement 226
Door Replacement 226
Door Adjustment and Repair. 226

SWS Alignment. 230

8: Heating and Cooling Systems

Combustion-Safety Evaluation 233
Combustion-Safety Observations 234
Leak-Testing Gas Piping 235
Carbon Monoxide (CO) Testing 235
Worst-Case CAZ Depressurization Testing 237
Mitigating CAZ Depressurization and Spillage 241
Zone Isolation for Atmospherically Vented Appliances 243

Electronic Combustion Analysis 244
Critical Combustion-Testing Parameters 246

Heating System Replacement 248
Combustion Furnace Replacement. 248
Gas-Fired Heating Installation. 251
Combustion Boiler Replacement 254
Oil-Fired Heating Installation 257
Evaluating Oil Tanks 260

Combustion Space Heater Replacement. 261
Space Heater Operation 262
Unvented Space Heaters. 263

Gas Burner Safety & Efficiency Service 264
Combustion Efficiency Test for Furnaces 264
Inspecting Gas Combustion Equipment 265
Testing and Adjustment 265

Oil Burner Safety and Efficiency Service. 267
Oil Burner Testing and Adjustment. 267
Oil Burner Inspection and Maintenance 271

Inspecting Furnace Heat Exchangers 273

Wood Stoves 274
Wood Stove Clearances. 275
Stove Clearances 275
Wood Stove Inspection 276

Inspecting Venting Systems. 279
Vent Connectors 279

Chimneys 282
Masonry Chimneys 282
Manufactured Chimneys. 286
Chimney Terminations 287
Air Leakage through Masonry Chimneys 288

Special Venting Considerations for Gas 289
Venting Fan-Assisted Furnaces and Boilers 290

Combustion Air. 292
Un-Confined-Space Combustion Air 293
Confined-Space Combustion Air 294

Ducted Air Distribution 297
Sequence of Operations 297
Solving Airflow Problems 297
Unbalanced Supply-Return Airflow Test 301
Evaluating Furnace Performance. 304
Improving Forced-Air System Airflow 306

Evaluating Duct Air Leakage 309
Troubleshooting Duct Leakage 309
Measuring Duct Air Leakage with a Duct Blower 313
Measuring House Pressure Caused by Duct Leakage . . 316

Sealing Duct Leaks 317
Sealing Return Ducts 317
Sealing Supply Ducts 319
Materials for Duct Sealing. 322

Duct Insulation 322
Spray Foam Duct Insulation. 324

Hot-Water Space-Heating Distribution 324
Boiler Efficiency and Maintenance 325
Distribution System Improvements 326

Steam Heating and Distribution. 329
Steam System Maintenance 330
Steam System Energy Conservation. 331

Programmable Thermostats 334

Electric Heat. 334
Electric Baseboard Heat. 335
Electric Furnaces 336
Central Heat-Pump Energy Efficiency 336
Room Heat Pumps 340
Ductless Minisplit Pumps 342

Evaluating Ducted Central Air-Conditioning Systems . . . 343
Central Air-Conditioner Inspection 344
Air-Conditioner Sizing 346
Duct Leakage and System Airflow. 346
Evaluating Air-Conditioner Charge 347

SWS Alignment. 348

9: Ventilation

Pollutant Control 355
Pollution-Control Checklist 356

Whole-Building Ventilation 356
Whole-Building Ventilation Requirement. 357
Local Exhaust Ventilation Requirement. 359
Infiltration Credit 360

Fan and Duct Specifications 361
Fan Specifications 361
Termination Fittings 363
Duct Sizing 365
Duct Materials and Installation 366

Whole-Building Ventilation Systems 367
Exhaust Ventilation 368
Supply Ventilation 369
Balanced Ventilation 371
Adaptive Ventilation 372

Attic Ventilation 373
Attic Ventilation as a Solution for Moisture Problems . 373
When to Install Attic Ventilation 373
Attic Ventilation Requirements 374
Power Ventilators 376
Unventilated Attics 376

Crawl Space Ventilation 377
Naturally Ventilated Crawl Spaces 377
Power-Ventilated Crawl Spaces 378
Conditioned Crawl Spaces 378

Ventilation for Cooling 379
Whole-House Fans 380
Window Fans 381
Air Circulation 382
Evaporative Coolers 382

SWS Alignment 386

10: Baseload Measures

Refrigerator Replacement and Maintenance 392
Refrigerator Replacement 392
Refrigerator Cleaning and Tuning 393
Refrigerator Metering Protocol 394

Entertainment and Computer Systems 398

Lighting-Efficiency Improvements 399
Daylighting 399
Lighting Retrofit Equipment 399

Clothes Washer Selection/Replacement 402
Clothes Washer Selection 402
Clothes Washer Installation 403

Clothes Dryer Selection/Replacement 403
Clothes Dryer Selection 404
Clothes Dryer Installation 404
Clothes Dryers Service and Venting 405

Water-Heating Energy Savings 407
Water-Saving Shower Heads and Faucet Aerators 408
Water Heater Blankets 409
Measuring and Adjusting Hot Water Temperature 411
Heat Traps and Water-Heater Pipe Insulation 412

Selecting Storage Water Heaters 413
Determining a Storage Water Heater's Insulation Level . . . 413
Storage Water-Heater Selection 415

Alternative Water-Heaters 415
Sidewall-Vented Gas Storage Water Heaters 415
On-Demand Gas Water Heaters 416
Heat Pump Water Heaters 416

Water Heater Installation 418

Comparing Water Heaters 419
Safety Comparison 419
Reliability Comparison 420
Efficiency and Energy Cost Comparison 421

SWS Alignment 422

11: Mobile Homes

Mobile Home Air Sealing 428
Shell Air Leakage Locations 429
Duct Leak Locations 431
Belly Pressure Test 432

Mobile Home Insulation 434
Insulating Mobile Home Roof Cavities 434
Mobile Home Sidewall Insulation 439
Mobile Home Floor Insulation 441

Mobile Home Windows and Doors 444
Mobile Home Storm Windows 445
Replacing Mobile Home Windows 446
Mobile Home Doors 446

Cool Roofs for Mobile Homes 447

Mobile Home Skirting 449

SWS Alignment 449

12: Air Leakage Diagnostics

Shell Air-Leakage Fundamentals 453
Goals of Air-Leakage Testing 454

House Airtightness Testing 456
Blower-Door Principles 456
Preparing for a Blower Door Test 458
Blower-Door Test Procedures 459
Approximate Leakage Area 462

Testing Air Barriers 462
Primary Versus Secondary Air Barriers 464
Simple Pressure Tests 465
Simple Zone Pressure Testing 467
Locating the Thermal Boundary 471

SWS Alignment 474

Appendices 475

R-values for Common Materials 475
ASHRAE 62.2 Example Calculation 476
ASHRAE 62.2 Duct Sizing 477
Fire Testing and Rating 478
SWS Maximum CAZ Depressurization 479
Gas Furnace Output Table 480
BPI CO &Draft Decision Table 481
Refrigerator Dating Chart 482
DOE Health and Safety Guidance 483

Index 489

Glossary 499

Chapter 1: Health and Safety

SWS Detail: 2.0100.1 Global Worker Safety

This chapter discusses some of the most important hazards that you find both in residential buildings and on weatherization jobs. The SWS contains many health-and-safety requirements that relate to various cost-effective energy-conservation measures (ECMs). These SWS requirements are referenced in this chapter.

The chapter begins with health, safety, and durability of the building. If health-and-safety problems affect the cost-effective ECMs you select, solve the problems before or during the weatherization work.

Workers are the most important asset of WAP. We discuss their health and safety at the end of this chapter.

Customer Health and Safety

House fires, moisture problems, carbon-monoxide poisoning, and lead-paint poisoning are the most common and serious health and safety problems found in homes.

Alert residents to any health and safety hazards that you find. Discuss known or suspected health concerns with occupants; take extra precautions based on occupant sensitivity to environmental hazards, such as chemicals and allergens.

- ✓ Inspect the home for fire hazards such as improperly installed electrical equipment, flammable materials stored near combustion appliances, or malfunctioning heating appliances. Discuss these hazards with occupants, and remove these hazards if possible.
- ✓ Understand and comply with the fire-containment code requirements of the IRC.

- ✓ Test combustion appliances for carbon monoxide and related hazards. Also measure carbon monoxide (CO) in the ambient air. Investigate and eliminate CO.
- ✓ Find moisture problems, and discuss them with the occupant. Solve moisture problems before or during weatherization work. *See page 28.*
- ✓ Obey the EPA Repair, Renovation, and Painting rules when working on homes built before 1978. Prevent dust during all weatherization projects. Explain the lead paint hazard and tell residents what you're doing to protect them. *See page 39.*

Worker Health and Safety

In the worker-safety section at the end of this chapter, we discuss the most dangerous hazards present during weatherization and how to avoid these hazards. Hazards include: driving, falls, back injuries, cuts, chemical exposure, repetitive stress, and electrical shocks.

1.1 Fire Safety

The building codes focus on preventing the spread of fire within and between buildings. A fire barrier is a wall assembly that has been tested and certified to withstand and contain a fire for a particular time duration.

A fire partition is a fire barrier that prevents the spread of fire between the sections of a building. A firewall is a structural fire barrier between buildings that is designed to remain standing during and after a fire.

Flame spread is a tested value of how fast a material burns compared to red oak planks.

A thermal barrier is a sheeting material that protects the materials behind it from reaching a temperature of 250°F or breeching during a fire. One-half-inch drywall is the most commonly used

thermal barrier and is rated for 15 minutes of protection. Fire partitions in multifamily buildings usually require a wall assembly with a 2-hour rating.

An ignition barrier is a material used with foam insulation to prevent the foam from igniting. The code specifies a number of materials that can serve as ignition barriers including drywall, plywood, fibrous insulation, galvanized steel, and intumescent paint.

See also "Fire Testing and Rating" on page 478.

1.2 Carbon Monoxide (CO)

SWS Details: 2.0105.1 Combustion Worker Safety, 2.0201.2 Combustion Safety, 2.0201.1 Combustion Appliance Zone (CAZ) Testing

Carbon monoxide is a colorless, odorless, poisonous gas. The EPA's suggested maximum 8-hour CO exposure is 9 ppm as measured in room air. CO at or above 9 ppm is often caused by malfunctioning combustion appliances in the home, although cigarette smoking or auto exhaust are also common CO sources. The EPA's one-hour CO limit is 35 ppm as measured.

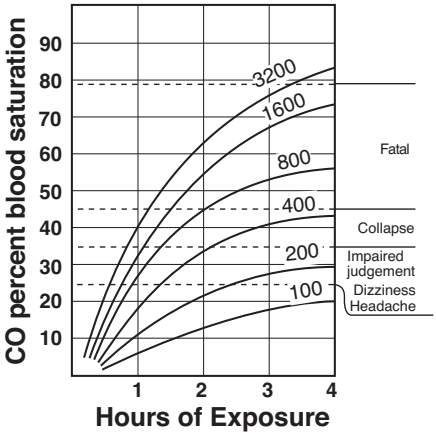

Effects of CO: This graph's 6 curves represent different CO exposure levels in PPM (parts per million).

1.2.1 Causes of Carbon Monoxide (CO)

CO is released by unvented gas space heaters, kerosene space heaters, backdrafting vented space heaters, gas ranges, leaky wood stoves, and motor vehicles idling in attached garages or near the home. Central furnaces and boilers that backdraft may also lead to high levels of CO.

CO is usually caused by these conditions.

- A combustion appliance is overfired compared to its rated input.
- Backdrafting combustion gases are smothering the flame.
- An object interferes with the flame (a pan over a gas burner on a range top, for example).
- Too-little combustion air.
- Rapidly moving air interferes with the flame.
- Burner misalignment causes a distorted flame.
- Flue or heat exchanger blockage interferes with the flow of flue gases.

Measure CO at the exhaust port of the heat exchanger. Identify and correct CO problems.

Testing for Carbon Monoxide (CO)

The most common CO-test instruments use electronic sensors with a digital displays showing parts per million (ppm). Read the manufacturer's instructions on zeroing the meter — usually by adjusting the meter in outdoor air. CO test equipment must usually be re-calibrated every 6 months, using factory-specified procedures.

Air-free CO measurement includes both CO and O_2 sensing with a calculation to find the CO concentration in undiluted flue gases that contain no oxygen. Air-free CO measurement avoids the perception that moving the testing probe or diluting

CO are solutions to elevated levels of CO. *See "Carbon Monoxide (CO) Testing" on page 235.*

Technicians must test for CO both before and after weatherization.

1.3 Smoke and Carbon Monoxide (CO) Alarms

Every home should have at least one smoke alarm. Homes with combustion appliances must also have a carbon monoxide (CO) alarm. Install these alarms on each level, near the bedrooms. In accordance with manufacturers specifications, new buildings require alarms in hallways and inside bedrooms.

Install combination CO/smoke alarms in homes with combustion appliances or attached garages that lack both smoke alarms and CO alarms.

Don't install alarms within 15 feet of gas ranges or combustion devices because small amounts of smoke or CO can cause nuisance false alarms.

Single-function alarms or combination alarms can interconnect electrically for whole-building protection. If one alarm sounds the other alarms sound too.

Educate occupants about the alarms and what to do if the alarm sounds. Discuss the low-battery chirping sound and how to replace the battery. Tell residents that alarms last less than 10 years and that a different sound will alert them when the alarm fails.

1.3.1 Smoke Alarms

SWS Detail: 2.0301.1 Smoke Alarm

Install smoke alarms labeled UL 217 in buildings where they don't exist or don't work.

- ✓ Install one smoke alarm in each home on each floor.

- ✓ If mounted on a wall, mount the alarm from 4 to 12 inches from the ceiling.
- ✓ If mounted on a ceiling, mount the alarm at least 6 inches from the nearest wall.
- ✓ If battery powered, prefer long-life lithium batteries.
- ✓ If hard wired, connect the alarm to a circuit that is energized at all times.

Don't install smoke alarms in these situations.

- Within 12 inches of exterior doors and windows
- With an electrical connection to a switched circuit
- With a connection to a ground-fault interrupter circuit (GFCI)

1.3.2 CO Alarms

SWS Detail: 2.0301.2 Carbon Monoxide Alarm or Monitor, 2.0201.2 Combustion Safety

Install at least one CO alarm in all weatherized homes or weatherized apartments. CO alarms must comply with these specifications.

- ✓ Have a label with a UL 2034 listing.
- ✓ If hard wired, connect to a circuit that is energized at all times by plugging in to an electrical receptacle.
- ✓ If battery powered, prefer long-life lithium batteries.
- ✓ Have a digital display of the CO measurement.
- ✓ Have a sensor-life alarm.

Don't install CO alarms in these situations.

- In a room that may get too hot or cold for alarm to function properly

- Within 5 feet of a combustion appliance, vent, or chimney
- Within 5 feet of a storage area for vapor-producing chemicals
- Within 12 inches of exterior doors and windows
- Within a furnace closet or room
- With an electrical connection to a switched circuit
- With a connection to a ground-fault circuit interrupter (GFCI)

1.4 Gas Range and Oven Safety

SWS Details: 2.0100.1 Global Worker Safety, 2.0201.2 Combustion Safety

Gas ovens can release CO into a kitchen. Oven burners are more likely to release CO compared to range-top burners so the oven burner is the most important burner to evaluate. Test the oven for combustion safety with these steps.

1. Turn the oven on and set it to bake on high temperature. Sample the CO level in exhaust gases at the oven vent and in the ambient air after 10 minutes.
2. If the CO reading is over 200 ppm as measured or 800 ppm air-free, or if the ambient-air reading rises to 35 ppm or more during the test, discontinue testing.
3. Clean and tune the oven by removing aluminum foil and adjusting the burner's gas control. If the CO reading remains over 200 ppm or 400 ppm air-free, recommend that the client consider replacing the range and oven.

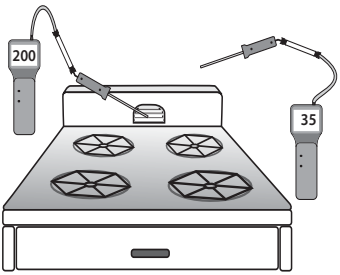

CO from range and oven: Measure CO at oven in undiluted flue gases. Air-free measurements require a capable analyzer.

4. If the burner flame has any discoloration, flame impingement, an irregular pattern, or if burners are visibly dirty, corroded, or bent, recommend client have them cleaned and adjusted.
5. A trained service person should take actions to clean and tune the stove and range if appropriate. Many range and oven burners are equipped with adjustable needle-and-seat valves.

Client Education about Ranges

Educate clients about the following safety practices in using their gas range.

- ✓ Never use a range burner or gas oven as a space heater.
- ✓ Open a window, and turn on the kitchen exhaust fan when using the range or oven.
- ✓ Buy and install a CO alarm, and discontinue use of the oven and range burners if the CO level rises above 9 ppm.
- ✓ Never install aluminum foil around a range burner or oven burner.
- ✓ Keep range burners and ovens clean to prevent dirt from interfering with combustion.
- ✓ Burners should display hard blue flames. Yellow or white flames, wavering flames, or noisy flames should be investigated by a trained gas technician.

Caution: To protect yourself and the occupants, measure ambient air in the kitchen during these tests. The ambient air should never be more than 35 parts per million (ppm) for one hour or 9 ppm (as measured) for any 8-hour period.

CO Mitigation for Ovens

When you measure CO at 200 ppm as measured or 400 ppm air-free, either at the oven vent while the oven is lit or one foot above the burners while they are lit, consider these remedies.

- Make adjustments to reduce the CO level, or recommend a service call by a gas combustion specialist to adjust the fuel-air mixture of the burners.
- Install a CO alarm near the kitchen but at least 15 feet away from the range.
- Install an exhaust fan with a capacity of 100 cubic feet per minute (cfm) in the kitchen in a fan currently doesn't exist there.

1.5 Reducing Moisture Problems

SWS Detail: 2.0401.1 Air Sealing Moisture Precautions

Moisture causes billions of dollars worth of property damage, sickness, and high energy bills each year in American homes. Water damages building materials by dissolving glues and mortar, corroding metal, and nurturing pests like mold, dust mites, and insects. These pests, in turn, cause respiratory illness.

Water reduces the thermal resistance of insulation and other building materials. High humidity also increases air-conditioning costs because the air conditioner removes moisture from the air to provide comfort.

The most common sources of moisture are leaky roofs, uncovered dirt floors in basements and crawl spaces, and damp foundations. Other critical moisture sources include dryers venting indoors, showers, cooking appliances, and unvented gas appliances like ranges or decorative fireplaces. Clients control many of these moisture sources, so educate them about how to reduce the moisture sources discussed here.

Climate is also a major contributor to moisture problems. The more rain, extreme temperatures, and humid weather a region experiences, the more of its homes are vulnerable to moisture problems.

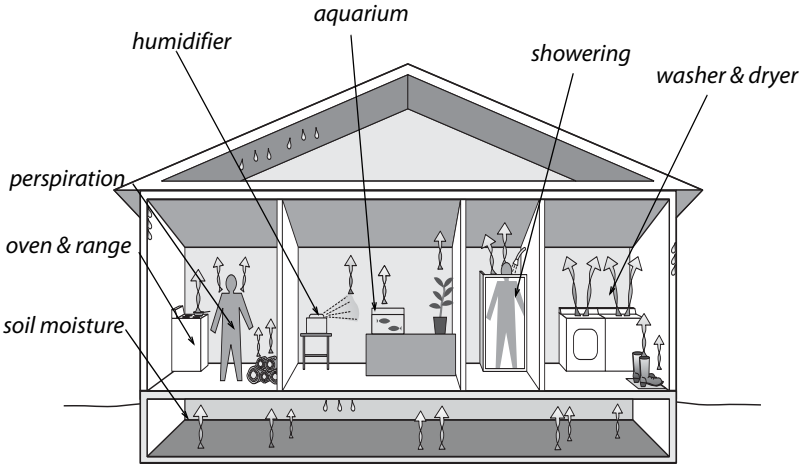

Moisture sources: Household moisture can often be controlled at the source by informed and motivated occupants, who work to control moisture sources like these.

Reducing moisture sources is the first priority for solving moisture problems. Next most important are air and vapor barriers to prevent water vapor from migrating through building cavities. Relatively tight homes need mechanical ventilation to remove accumulating water vapor.

Table 1-1: Moisture Sources and Their Potential Contributions

Moisture Source	Potential Amount Pints
Ground moisture	0–105 per day
Unvented combustion space heater	0.5–20 per hour
Seasonal evaporation from materials	6–19 per day
Dryers venting indoors	4–6 per load
Dish washing	1–2 per day
Cooking (meals for four persons)	2–4 per day
Showering	0.5 per shower

1.5.1 Symptoms of Moisture Problems

SWS Detail: 2.0401.1 Air Sealing Moisture Precautions

Condensation on windows, walls, and other cool surfaces signals high relative humidity and the need to reduce moisture sources. During very cold weather or summer air conditioning, condensation may occur on cold surfaces. This occasional condensation isn't a major problem. However, if condensation is a persistent problem, reduce moisture sources. Adding insulation helps eliminate cold walls, ceilings, or air-conditioning ducts where water vapor condenses.

Moisture problems arise when parts of the building become wet often and stay wet for periods of time. Moisture in organic or porous building materials reaches a threshold that allows pests like mold, dust mites, and insects to thrive. These pests can cause or aggravate asthma, bronchitis, and other respiratory ailments because they produce potent biological allergens.

Rot and wood decay indicate advanced moisture damage. Unlike surface mold and mildew, wood decay fungi penetrate, soften, and weaken wood.

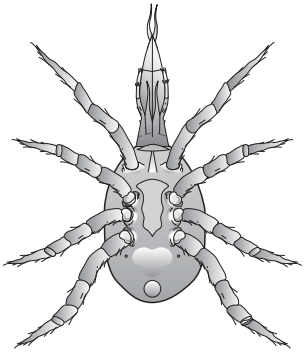

Dust mites: Biological pests create bioaerosols that can cause allergies and asthma.

Peeling, blistering, or cracking paint may indicate that moisture is moving through a wall, damaging the paint and possibly also the building materials underneath.

Corrosion, oxidation, and rust on metal are unmistakable signs of moisture problems. Deformed wooden surfaces may appear as the damp wood swells, and later warps and cracks as it dries.

Efflorescence is a white, powdery deposit left by water that moves through masonry and leaves minerals from mortar or the soil behind as it evaporates from the masonry surface. Concrete and masonry efflorescence indicates water movement through the home's foundation.

1.5.2 Solutions for Moisture Problems

SWS Details: 2.0404.1 Stand-Alone Dehumidifiers, 2.0404.4 Basements—Dehumidification, 3.1488.3 Covers for Sump Pumps, Drains, Pits, and other Intentional Slab Penetrations

Preventing moisture problems is the best way to guarantee a building's durability and its occupant's respiratory health. However, the solutions get progressively more expensive if simple solutions don't solve the problems.

Inexpensive Moisture Solutions

If moisture source reduction isn't adequate to prevent moisture problems, try these solutions after preventive measures are in place.

- ✓ Install a ground moisture barrier, which is a piece of heavy plastic sheeting (6 mil minimum) laid on the ground. Black heavy plastic film works well, but tough cross-linked polyethylene is even more durable. Secure the edges to the foundation walls 6" above the ground with polyurethane adhesive and/or mechanical fasteners.
- ✓ Overlap the ground moisture barrier seams by 12" and seal with polyurethane adhesive.
- ✓ Verify that clothes dryers and exhaust fans vent to the outdoors and not into crawl spaces or attics.

- ✓ Seal water leaks in the foundation.
- ✓ Seal water leaks in the roof. Unclog or repair gutters and downspouts and make certain that water drains away from the foundation.
- ✓ Remove unvented space heaters, a major source of moisture, from the home.
- ✓ Educate clients about ways of reducing home moisture that are under their control.
- ✓ Educate customers to avoid excessive watering around the home's perimeter. Watering lawns and plants close to the house can dampen its foundation. In moist climates, keep shrubbery away from the foundation, to allow air circulation near the foundation.
- ✓ Make sure that all sump pump hoses or PVC drains are placed away from the foundation on a down grade pitch.
- ✓ Insulate air-conditioning ducts to prevent summer condensation.

More Costly Moisture Solutions

Follow these preventive measures before trying any of the solutions in the next section.

- ✓ Install or improve air barriers and vapor barriers to prevent air leakage and vapor diffusion from transporting moisture into building cavities. *See page 453.*

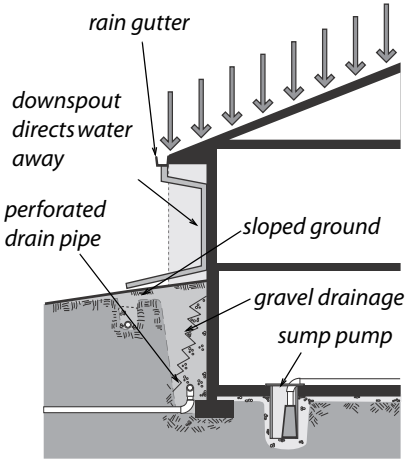

Stopping water intrusion: Take all necessary steps to protect homes from water intrusion.

- ✓ Add insulation to the walls, floor, and ceiling of a home to keep the indoor surfaces warmer and less prone to winter condensation. During cold weather, well-insulated homes can tolerate higher humidity without condensation than can poorly insulated homes.
- ✓ A sump pump is the most effective remedy when ground water continually seeps into a basement or crawl space and collects there as standing water. Persistent ground-water seepage may only be solved by connecting an interior perimeter drain to the sump. The sump should have an airtight cover to prevent sump-water evaporation.
- ✓ Ventilate the home with drier outdoor air to dilute the more humid indoor air. Ventilation is only effective when the outdoor air is drier than the inside air, such as in winter. In summer, outdoor air may be more or less humid than indoor air depending on climate and whether the home is air conditioned.

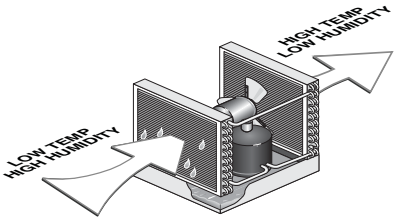

Dehumidifiers: In damp climates, dehumidifiers protect homes from excessive moisture.

Dehumidifiers and Air-Conditioners for Drying

SWS Detail: 2.0404.1 Stand-Alone Dehumidifiers, 2.0404.4 Basements—Dehumidification

As a last resort, remove moisture from indoor air by cooling the air to below its dew point with dehumidifiers in winter and air-conditioners in summer. Using air conditioners and dehumidifiers for drying a home is the very most expensive solution. Try all the moisture solutions discussed previously before resorting to a dehumidifier.

The dehumidifier should meet these specifications.

- ✓ Must be ENERGY STAR or more efficient.
- ✓ Must have a fan-off option.
- ✓ Must retain automatic settings after power interruption.
- ✓ Must be rated for low temperature operation if located in a basement or crawl space.

When you install a dehumidifier, observe these requirements.

- ✓ Install the dehumidifier in a location that allows free air-flow around it.
- ✓ The dehumidifier should have automatic controls to limit energy and power.
- ✓ Make sure that the dehumidifier works and measure the relative humidity in the space before completing the installation.

- ✓ Drain the dehumidifiers collected water to a plumbing drain in a code-approved way.
- ✓ Give the homeowner the user guide, warranty information, and explain how to use the dehumidifier. Show the occupant how to clean or change the filter and how to clean the condensate drain.

1.5.3 Crawl Space Moisture and Safety Issues

SWS Detail: 2.0111.2 Crawl Spaces—Pre-Work Qualifications, 2.0111.3 Crawl Spaces—Debris Removal, 2.0403.2 Closed Crawl Spaces—Ground Moisture Barriers, 2.0403.1 Vented Crawl Spaces—Ground Moisture Barrier

Air, water vapor, liquid water, and pollutants move through soil and into crawl spaces and dirt-floor basements. Even if soil's surface seems dry and airtight, the soil may allow a lot of water vapor and soil gases to enter a home.

Cover the ground with an airtight moisture barrier to prevent the movement of moisture and soil gases from the ground into the crawl space using these procedures.

- ✓ The crawl space should have an access hatch or door that is 24 inches by 18 inches.
- ✓ Remove biodegradable matter, such as wood and cardboard, as well as any other debris or storage items, from the crawl space.
- ✓ Cover the ground completely with a ground moisture barrier such as 6-mil polyethylene where little or no foot traffic exists. Install reinforced or cross-linked polyethylene where the barrier will see foot traffic, such as when the crawl space is used for storage.
- ✓ The edges of the barrier should run at least 6" up the foundation walls and internal supporting structures. Fasten the barrier with wood strips, masonry fasteners, and sealant.

Installers may also adhere the barrier with polyurethane adhesive or acoustical sealant to a clean and flat masonry surface.

- ✓ Seal the edges and seams with urethane, acoustical sealant, butyl caulking, or construction tape to create an airtight seal between the crawl space and the ground underneath.
- ✓ To avoid trapping of moisture against wood surfaces, ground moisture barriers must not touch wood structural members, such as posts, mud sills, or floor joists.

1.5.4 Ground Moisture Source-Reduction

Observe the following specifications for avoiding the deteriorating effects of ground moisture on building materials. Finish all of the following tasks before air sealing the floor or installing underfloor insulation

- ✓ Repair plumbing or sewer leaks.
- ✓ Solve all drainage problems, ground-water problems, wood-deterioration, and structural problems.

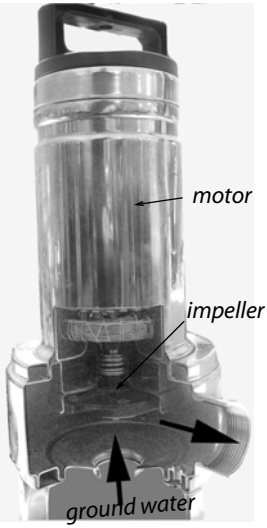

Sump pump: Pumps water out of a sump or basin where water collects in a basement or crawl space.

- ✓ Verify that the ground outside the home slopes away from the foundation or that water can't stand near the foundation.
- ✓ Install or repair rain gutters as necessary, and verify that downspouts discharge rainwater at least 3 feet away from the home.
- ✓ Verify that all combustion vents (chimneys), clothes-dryer vents, and exhaust fan vents are vented to outdoors and not into crawl spaces.
- ✓ Suggest a sump pump for crawl spaces or basements with a history of flooding. The sump pump should be located in an area where it collects water from the entire below-grade area and pumps it away from the foundation to daylight.
- ✓ Provide crawl-space ventilation which follows the requirements of the IRC and SWS. *See "Crawl Space Ventilation" on page 377.*

1.6 Pollutants Source Control

Radon and asbestos are also important hazards to both occupants and workers.

1.6.1 Radon

SWS Details: 2.0501.1 Radon—Air Sealing Considerations, 2.0501.2 Radon—Basements and Crawl spaces

Radon is a dangerous indoor air pollutant that comes from the ground through rocky soil. Studies predict about 20,000 lung cancer deaths per year are caused by radon exposure.

Energy conservation work usually has little effect on radon concentrations. However, all housing specialists should be aware of: the radon hazard, radon testing procedures, and radon mitigation strategies.

The EPA believes that any home with a radon concentration above 4 pico-Curies per liter (pC/l) of air should be modified to reduce the radon concentration. There are several common and reliable tests for radon, which are performed by health departments and private consultants throughout the U.S.

Since radon comes through the soil, mitigation strategies include the following.

- Installing a plastic ground barrier and carefully sealing the seams and edges
- Sealing the walls and floor of the basement
- Ventilating the crawl space or basement with an exhaust fan to dilute radon
- Depressurizing the ground underneath the basement concrete slab

The first two mitigation strategies may already be prescribed by the weatherization work order and may help to keep radon levels acceptable after air-sealing.

1.6.2 Asbestos Containing Materials (ACM)

SWS Detail: 2.0104.1 Insulation Worker Safety

Asbestos is classified as a "known carcinogen." Asbestos is found in the following materials: boiler and steam-pipe insulation, duct insulation, floor tile, siding, roofing, some types of vermiculite, and some adhesives. Weatherization workers must be trained to recognize asbestos and to avoid disturbing it. Penalties for mishandling asbestos-containing materials can amount to $25,000 per day.

DOE weatherization policy requires weatherization agencies to observe the following safety precautions regarding asbestos.

- Asbestos siding comes in sheets approximately 16 inches by 24 inches. It is very weatherproof but very brittle. Remove

asbestos siding only if you can remove the siding without damaging it.

- Assume that asbestos is present in old gray-colored pipe insulation and duct insulation. Don't disturb asbestos-containing pipe or duct insulation; also caution occupants to avoid disturbing asbestos.
- Don't cut, drill, scrape, sand or brush ACM.
- Don't remove vermiculite. Test vermiculite for asbestos, and use air monitoring if asbestos is present in the vermiculite in a home you're weatherizing.

Contract with certified asbestos testers and licensed abatement specialists to mitigate asbestos problems before or during weatherization, if necessary.

1.6.3 Lead-Safe Procedures

SWS Detail: 2.0100.1 Global Worker Safety

In 2010, The Environmental Protection Agency's (EPA) Lead-Safe Renovation, Repair, and Painting (RRP) rule became a legal mandate for weatherization work. Effective 7/30/2010 the Massachusetts Department of Labor Standards was authorized by the US EPA to take over administrative and enforcement responsibilities of the Lead RRP Rule.

Lead dust is dangerous because it damages the neurological systems of people who ingest it. Children are often poisoned in pre-1978 homes because of paint disturbance during home improvement and because hand-to-mouth behavior is common. Workers are poisoned by dust containing lead.

Lead paint was commonly used in homes built before 1978. Contractors working on these older homes should either assume the presence of lead paint or perform tests to rule out its presence.

This section provides general information about working in homes that may have lead paint. This section doesn't provide complete information about Lead RRP requirements and compliance.

EPA RRP Requirements

The RRP rule requires lead-safe containment procedures whenever workers disturb painted surfaces of more than 6 square feet of interior surface per room or more than 20 square feet of exterior surface per side by cutting, scraping, drilling, or other dust-creating activities in pre-1978 homes. Disturbing paint on windows and doors always requires containment.

The RRP requires certifications, warnings, dust-prevention, dust collection, and housecleaning as summarized here.

- ✓ With pre-1978 homes, either test for lead-based paint or assume that lead-based paint is present.
- ✓ All work in pre-1978 housing must comply with the Massachusetts Department of Labor Standards (DLS) Lead; Renovation, Repair and Painting Program (RRP) regulations. All WAP work that may disturb lead-based paint in pre-1978 homes must be completed by MA Lead-Safe Renovation Contractor Licensed (EPA-Certified Firm) companies using MA Lead-Safe Renovator-Supervisors (equivalent to an to EPA Certified Renovator).
- ✓ All work practices must be consistent with the requirements of the MA DLS RRP. That policy can be found here *http://www.Mass.gov/leadsafe*. Work also must comply with DOE Lead Safe Weatherization (LSW) Practices. Also, contractors and Subgrantee staff working in homes must attend DOE LSW Training and any required continuing-education workshops mandated by the Grantee or Subgrantee.
- ✓ Signs and barriers must warn occupants and passersby not to enter the work area.

- ✓ Floor-to-ceiling dust-tight barriers must prevent the spread of dust from the work area.

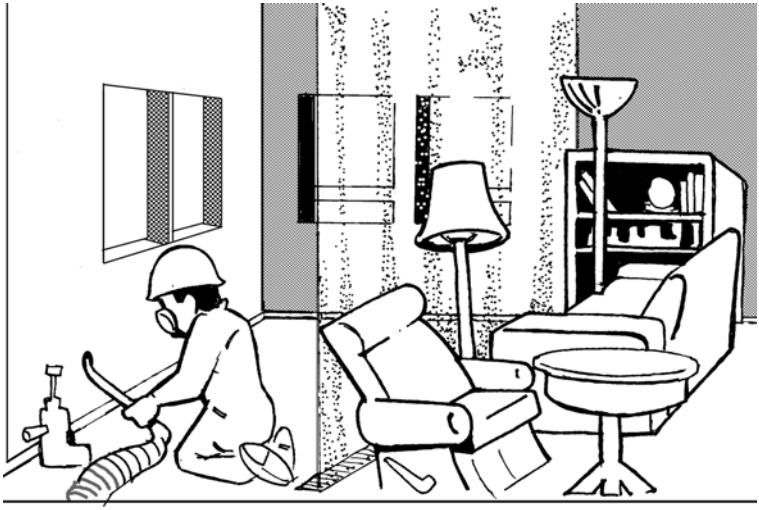

Protective sheeting: Dust-tight floor-to-ceiling barriers must separate work areas from living areas, according to EPA's RRP rule.

- ✓ Plastic or canvas sheeting must protect surfaces and fixtures within the work area.
- ✓ Workers must clean work surfaces sufficiently to pass an EPA-approved dust-wipe test, conducted by the certified renovator.
- ✓ Workers must not track dust from the work area into the home.

Lead-Safe Work Practices

Lead-Safe Weatherization (LSW) is a set of procedures developed by the Department of Energy prior to the enactment of the RRP rule. LSW requires the same basic procedures as RRP in pre-1978 homes. On-site workers and inspectors must attend DOE LSW training in addition to the requirements of the Lead RRP. When engaging in the paint-disturbing weatherization

activities, follow these lead-safe work practices that were established by weatherization experts.

- ✓ Wear a tight-fitting respirator to protect yourself from breathing dust or other pollutants.
- ✓ Confine your work area within the home to the smallest possible floor area. Seal this area off carefully with floor-to-ceiling barriers made of disposable plastic sheeting, sealed at floor and ceiling with tape.
- ✓ Don't use heat guns or power sanders in LSW work.
- ✓ Spray water on the painted surfaces to keep dust out of the air during drilling, cutting, or scraping painted surfaces.

Drill shroud connected to HEPA vacuum: Collect dust where you're generating it.

- ✓ Erect an effective dust-containment system outdoors to prevent dust contamination to the soil around the home.
- ✓ Use a dust-containment system with a HEPA vacuum when drilling holes indoors.
- ✓ Avoid taking lead dust home on clothing, shoes, or tools. Wear boot covers while in the work area, and remove them to avoid tracking dirt from the work area to other parts of the house. Wear disposable coveralls, or vacuum cloth

coveralls with a HEPA vacuum before leaving the work area.

Wash thoroughly before eating, drinking, or quitting for the day.

1.7 Electrical Safety

SWS Detail: 2.0100.1 Global Worker Safety

Electrical fires and shocks are common and serious safety problems. Electrical safety is a basic housing need, requiring attention during home weatherization and repair. All electrical work must be completed by a MA licensed electrician.

Observe the following specifications for electrical safety in weatherizing existing homes.

Non-contact voltage tester: Test voltage wires near your work area and take action to turn off the circuit if appropriate.

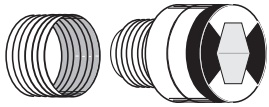

S-type fuse: An S-type fuse prohibits residents from oversizing the fuse and overloading an electrical circuit.

- ✓ Whenever working around wiring, use a non-contact voltage tester to determine whether circuits are live. Turn circuits off at circuit breakers as appropriate.
- ✓ Inspect wiring, fuses, and circuit breakers to verify that wiring isn't overloaded. Install S-type fuses where appropriate to prevent circuit overloading. Maximum ampacity for 14-gauge wire is 15 amps and for 12-gauge wire is 20 amps.

- ✓ Confirm that all wire splices are enclosed in electrical junction boxes. If you plan to cover a junction box with insulation, attach a flag to mark its location.
- ✓ Don't allow metal insulation shields to contact wiring.
- ✓ Verify that the electrical system is grounded to either a ground rod or to a water pipe with an uninterrupted electrical connection to the ground.
- ✓ Install S-type fuses where appropriate to prevent occupants from installing oversized fuses.
- ✓ Perform a voltage-drop test to evaluate the size and condition of hidden wiring on older homes if appropriate.
- ✓ Whenever you doubt the integrity of a home's electrical system, use a generator to power insulation blowers and other large power tools.

1.7.1 Decommissioning Knob-and-Tube Wiring

SWS Detail: 4.1001.2 Knob and Tube Wiring

Subgrantees must ensure that a Massachusetts Licensed Electrician performs an electrical safety inspection prior to beginning the weatherization process in all cases where knob-and-tube wiring is identified. The electrician must provide a written report to the Subgrantee regarding the location of all active and inactive knob-and-tube wiring prior to any air sealing or insulation work.

If the knob-and-tube wiring has been deactivated, but is still in place and the dwelling has been rewired, then insulation may be placed around and in contact with the inactive knob-and-tube wiring. Insulation may be placed over deactivated knob and tube wiring only after the Subgrantee receives written confirmation from a Massachusetts Licensed Electrician.

Limited replacement of active knob-and-tube wiring is an allowable DOE WAP repair measure. Rewiring is limited by

DOE policy to only that which is necessary to allow for the installation of insulation. DOE policy prohibits the complete rewiring of a home because that would be considered a housing rehabilitation measure and is beyond the scope of the WAP.

If the knob-and-tube wiring is active in an open attic or basement area, keep all insulation at least three (3) inches from the knob-and-tube. Blown insulation must be appropriately dammed to keep the insulation from advancing closer than 3 inches from the knob-and-tube wiring. If the knob-and-tube wiring is active in sidewall cavities or other restricted areas (floored attics) that can't be accessed, don't install insulation in those cavities. Insulate all cavities that don't contain active knob-and-tube.

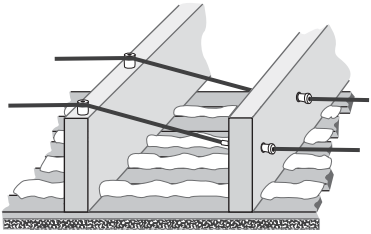

Knob and tube wiring: Obsolete and worn wiring should be replaced during energy retrofit work so that building cavities can be sufficiently insulated.

Use a non-contact voltage tester to determine whether the knob-and-tube wiring is live. If you're unsure about whether the wiring is still live, schedule an inspection by a qualified and experienced electrician.

1.7.2 Constructing Shielding for Knob-and-Tube Wiring

SWS Detail: 2.0601.1 Knob and Tube Wiring

You may install attic insulation up to the bottom of knob-and-tube wiring, but never cover knob-and-tube wiring with insulation that covers the wires.

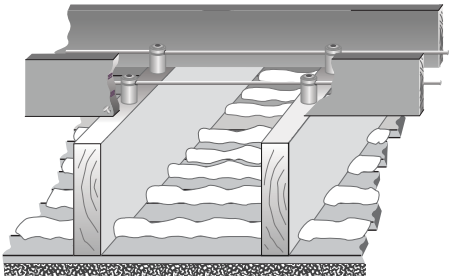

Shielding knob and tube: If you can't decommission knob-and-tube wiring, you may construct a dam to shield it from being covered by insulation.

- ✓ Construct structural dam to maintain a 3-inch clearance between attic insulation and knob-and-tube wiring. Do not cover the knob-and-tube wiring.
- ✓ Flag the shielding structure before insulating over it to mark it for future access or removal.

1.8 Worker Health and Safety

SWS Detail: 2.0100.1 Global Worker Safety, 2.0106.1 Ventilation Worker Safety

The personal health and safety of each employee is vitally important to every weatherization agency. Injuries are the fourth leading cause of death in the United States, while long-term exposure to toxic materials contributes to sickness, absenteeism, and death of workers. Both injury hazards and toxic substances are present during weatherization work.

The Occupational Safety and Health Administration (OSHA) establishes workplace safety standards. Weatherization staff and contractors must attend training on OSHA standards and observe these standards on the job. Safety always has priority over other factors affecting weatherization operations.

Some hazards deserve attention because of their statistical danger. Become aware of these most common workplace hazards.

- ✓ Vehicle accidents

- ✓ Falls
- ✓ Back injuries
- ✓ Exposure to hazardous materials
- ✓ Electrical hazards
- ✓ Repetitive stress injuries

1.8.1 Commitment to Safety

Workers may not remember safe work practices unless safety is periodically reinforced.

Safety education: Safety meetings are an essential part of a successful safety program.

- ✓ Arrange regular health and safety training.
- ✓ Conduct monthly safety meetings at headquarters and weekly safety meetings on the current jobsite.
- ✓ Provide well-equipped first-aid kits in the work vehicles and in the warehouse.
- ✓ Provide or require personal protective equipment for workers appropriate for their job duties.
- ✓ Provide a fire extinguisher in the warehouse and each work vehicle.
- ✓ Keep equipment in good condition.

- ✓ Observe all state and federal standards relating to worker health and safety.
- ✓ Keep lists of emergency-contact phone numbers for both employees and emergency services in the warehouse and in the work vehicles.
- ✓ Keep Material Safety Data Sheets (MSDSs) in the warehouse and in the work vehicles.

Safety requires communication and action. To protect yourself from injury and illness, learn to recognize hazards, communicate with co-workers and supervisors, and take action to reduce or eliminate hazards.

1.8.2 New Employees

New employees are several times more likely to injure themselves on the job compared to experienced workers. Before their first day on the job, new employees should learn about safety basics such as proper lifting, safe ladder usage, and safe operation of the power tools they will use on the job.

New hire: New hires are several times more likely to be injured than are experienced workers.

Be sure to inform new employees about hazardous materials they may encounter on the job. Show new hires the Material Safety Data Sheets (MSDS) required by OSHA for each material.

New employees should be required to use this common safety equipment.

- ✓ Proper clothing.
- ✓ Leather gloves with cuffs.
- ✓ Respirators.
- ✓ Safety glasses.
- ✓ Hearing protectors.

Ban alcohol and drugs from agency headquarters and the job. Staff members should be encouraged to refrain from smoking and to stay physically fit.

1.8.3 Driving

According to the Bureau of Labor Statistics, one-third of all occupational fatalities in the United States occur in motor-vehicle accidents. Staff members should organize their errands and commuting to the job site so as to minimize vehicle travel.

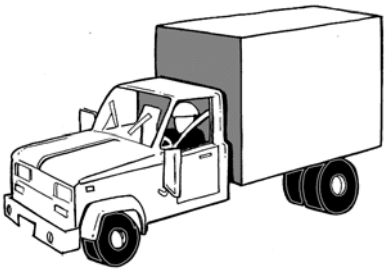

Safe vehicles: Maintain vehicles in good repair. Drivers and passengers should always wear seat belts.

Vehicles should be regularly inspected and repaired if necessary. Verify that these safety features are present and functioning.

- ✓ Brake system
- ✓ Steering system
- ✓ Horn
- ✓ Headlights

- ✓ Rear-view and side-view mirrors
- ✓ Directional signals
- ✓ Backup lights
- ✓ A fire extinguisher

Always wear seat belts. Before traveling to the job, secure tools and materials in the vehicle's cargo area to prevent shifting.

1.8.4 Lifting and Back Injuries

Back injuries account for one out of every five workplace injuries. Most of these injuries are to the lower back and result from improper lifting, crawling in tight spaces, and using heavy tools.

Workers often injure their backs by lifting heavy or awkward loads improperly or without help. Use proper lifting techniques such as lifting with the legs and keeping a straight back whenever possible. To avoid back injury, get help before trying to lift heavy or awkward loads, stay in good physical condition, and control your weight through diet and exercise.

Awkward loads: Ask for help when moving heavy or awkward loads.

Workers with limited lifting abilities because of weakness or prior injury should avoid heavy lifting.

These policies help prevent jobsite injuries.

- ✓ Redesign work activities: adapt equipment to minimize awkward movements on the job site.
- ✓ Perform strength-testing of workers, set lifting limits, and provide training for all workers on the causes and prevention of back injuries.
- ✓ Encourage breaks to prevent workers from being in straining positions for long time periods.
- ✓ Share the most difficult work among all capable crew members.

1.8.5 Respiratory Health

SWS Detail: 2.0100.1 Global Worker Safety, 4.9901.1 General Information on Spray Polyurethane Foam (SPF), 2.0106.1 Ventilation Worker Safety

Wear your respirator when working in a dusty or polluted environment. Common construction dust can contain toxins including lead, asbestos, and chemicals released by drilling, cutting, scraping. Liquid foam, caulking, and solvents release toxic organic vapors that require either organic vapor cartridges or a fresh-air supply.

Test your respirators to be sure they have a good fit.

- ✓ Check the straps and face piece to be sure they are soft and free of cracks.
- ✓ Strap on the respirator and adjust the straps to be snug but comfortable.
- ✓ Close the exhalation valve with a hand.
- ✓ Exhale gently and check for leaks around the edges.
- ✓ If there are leaks, adjust or repair the respirator.

When applying low pressure 2-component spray polyurethane foam, wear an air purifying mask with an organic vapor cartridge and a P-100 particulate filter.

Workers with beards, facial scars, and thick temple bars on eyeglasses must use full-face respirators to achieve a good seal. OSHA requires a completed form documenting employees' fit tests each year.

When spraying low-pressure polyurethane foam, use a respirator cartridge designed to filter organic vapors, and ventilate the area where you're spraying the foam. When spraying high-pressure polyurethane foam, use a supplied-air, positive-pressure respirator, and ventilate the area.

Learn how to recognize asbestos insulation that may be installed around older furnaces and boilers.

Control dust in your client's homes by erecting temporary barriers when you are doing work that may release dust. Wear coveralls when entering attics or crawl spaces. Coveralls should be disposable or laundered professionally.

1.8.6 Hazardous Materials

SWS Detail: 2.0110.1 Material Selection, Labeling, and Material Safety Data Sheets (MSDSs), 2.0100.1 Global Worker Safety

Your health and safety can be threatened by hazardous materials used on the job. Workers often fail to protect themselves from hazardous materials because they don't recognize the hazards. Breathing hazardous materials, absorbing them through the skin, and coming into eye contact with hazardous materials are common ways workers are injured by chemicals.

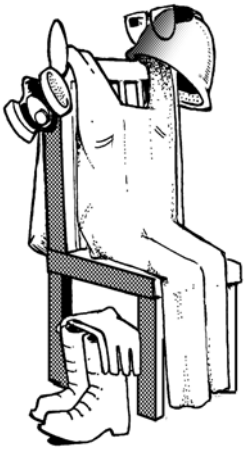

Personal protective equipment: Employees should own and maintain protective equipment to protect themselves from hazardous materials.

OSHA regulations require employers to notify and train employees about hazardous materials used on the job. A Material Safety Data Sheet (MSDS) for every workplace hazardous material should be readily available to employees. Obtain copies of MSDSs from manufacturers or their distributors. OSHA

requires that the MSDSs be available at headquarters and at the jobsite for worker reference.

Learn how to handle hazardous materials used on the job. Use the personal protective equipment (PPE) that is recommended by the MSDS.

1.8.7 Equipment for Personal and Crew Safety

SWS Detail: 2.0100.1 Global Worker Safety

Worker should have their own personal protective equipment.

- Respirators with dust and organic-vapor cannisters
- Clean cloth coveralls or disposable coveralls
- Gloves
- Safety glasses
- Hearing protection
- Hard hat for head-injury hazards

Crews should equip themselves with the safety equipment listed here.

- Ladder levelers and stabilizers
- Portable lights for work in dark areas
- A water jug
- Insect spray
- Safe, heavy electrical cords with GFCI receptacles

1.8.8 Falls

SWS Detail: 2.0100.1 Global Worker Safety

Falls off ladders and stairs cause 13% of workplace injuries according to the National Safety Council. Other falls from the

ladder heights account for approximately 7% of workplace injuries.

Ladders: Ladders are the most dangerous tools workers use.

Broken ladders and unstable ladders are both major causes of on-the-job falls. Step ladders, for instance, are often used for work that is too far off the ground, forcing workers to stand on the top step or to reach too far.

OSHA regulations include these important guidelines for ladder use.

- ✓ Maintain all ladders in good repair, and replace ladders if they have missing or damaged steps, cracked side-rails, or damaged feet.
- ✓ Extend extension ladders at least three feet above the area they access.
- ✓ Ladders shouldn't have a pitch steeper than four feet of rise for each foot that the ladder's feet are away from the building.
- ✓ Block or tie ladders firmly in place at the top and bottom if you install the ladder at a steeper angle than suggested above or on windy days.
- ✓ Don't use metal ladders where they may accidentally touch electrical conductors.

- ✓ Maintain ladders free of oil, grease, and other slipping hazards. Inspect your shoes for slipping hazard before climbing a ladder.
- ✓ Don't over-reach: instead move the ladder.
- ✓ Avoid carrying heavy loads up ladders and operating power tools from ladders.

Build scaffolding when working above-ground for sustained time periods. Each scaffold leg should be stabilized so that it supports an equal weight as other legs. Secure planks to the structure and provide handrails on the sides and ends of the walkway.

Good housekeeping: Clear stairs and walkways are essential to protect workers and clients alike from falls.

Workers should inspect their workplaces regularly to notice and remove slipping and tripping hazards. Workers carrying loads should create and maintain debris-free walkways.

1.8.9 Tool Safety

SWS Detail: 2.0100.1 Global Worker Safety

The tools used in construction work are dangerous if used improperly. About 90,000 people hurt themselves with hand tools each year. The crew chief should conduct tool safety training as frequently as necessary to insure safe tool use.

These basic safety rules can reduce the hazards of using hand and power tools.

- ✓ Use the right tool for the job.
- ✓ Keep all tools in good condition with regular maintenance.
- ✓ Inspect tools for damage before using them.
- ✓ Operate tools according to the manufacturer's instructions.
- ✓ Use appropriate personal protective equipment.
- ✓ Use double insulated power tools of ground-fault-circuit-interrupter (GFCI) outlets or extension cords to prevent electric shock.

Electrical safety: Maintain cords in good condition. Use ground-fault-circuit interrupter (GFCI) cords for outlets in wet conditions.

- ✓ Use generators for electrical service on the jobsite and ground them.
- ✓ Verify that generator exhaust is directed away from the home, the vehicle, and the crew.

1.8.10 Repetitive Stress Injuries

Repetitive stress injuries are caused by over-working certain parts of your body. Poor body posture, such as reaching above your head when operating a power drill, can encourage these injuries. Good work habits prevent this type of injury.

- ✓ Use a comfortable arm and hand posture when operating tools for a long period of time.

- ✓ Change the angle and location of your work surface frequently.
- ✓ Mix your difficult tasks with easier ones.
- ✓ Carry smaller loads.
- ✓ Take short rest breaks periodically, and stretch any tight muscles during this time.

When you purchase hand and power tools, look for models with ergonomic designs that place less stress on your body.

1.8.11 Safety for Crawl Spaces and Other Confined Areas

SWS Detail: 2.0701.1 Crawl Spaces—Providing Access, 2.0701.2 Crawl Space Information Sign

The Occupational Safety and Health Administration (OSHA) defines a confined space as a space that contains a hazard like confinement, limited access, or restricted airflow because of its small size.

Access to Confined Spaces

Employers must be aware of the hazards of confined spaces and have policies for protecting workers. Consider these requirements when appropriate.

- ✓ The crawl space must have an access hatch or door that is 24 inches by 18 inches.
- ✓ Workers should identify access and egress points before entering a confined space.
- ✓ If a heating and cooling system is located in the crawl space, the crawl space must have an access hatch or door measuring 22 inches by 30 inches or big enough to remove the heating and cooling system, whichever is greater.

Chemicals in Confined Space

Observe these requirements when using chemicals in confined spaces.

- ✓ At minimum, workers using any type of chemical in a confined space must employ continuous powered ventilation using adequately sized openings to facilitate airflow into and out of the confined space.
- ✓ If workers use chemicals in significant quantities, such as spraying of two-part polyurethane foam, the workers should wear respirators that supply fresh air.
- ✓ If a confined space contains a hazard like chemical vapors or the potential to collapse or trap a worker, the space is called a permit-required confined space (PRCS). A worker must have a permit to enter the space and workers without permits must not enter. The permitted workers must have special training and equipment to enter the confined space.

1.8.12 Safety for Extreme Weather

SWS Detail: 2.0100.1 Global Worker Safety

Extreme weather is a common cause of job-related sickness and injury. You can avoid sickness and injury by awareness and preventive measures.

Hot Weather Safety

Know the signs of heat ailments and take action if you or a co-worker experiences the beginning of symptoms. Observe these hot-weather suggestions for staying cool and preventing heat ailments.

- ✓ Drink plenty of water and take salt tablets.
- ✓ Ventilate attics with fans.

- ✓ Rotate workers in attics to prevent heat exhaustion.
- ✓ Use water or ice to cool your skin.
- ✓ Rest when you feel fatigued.

Cold Weather Safety

Workers and supervisors should know the temperature, wind speed, and precipitation forecast. Dress for extreme cold and plan work around storms and other extreme weather events.

- ✓ Dress in layers for comfort and changing temperatures.
- ✓ Wear insulated boots or heavy socks.
- ✓ Wear insulated gloves.
- ✓ Seek warm shelter if you experience numbness or uncomfortable chilling.

Windy Weather Safety

Be aware of the forecast for windy weather and take precautions before beginning work and before the wind blows.

- ✓ Tie ladders off high and anchor them low.
- ✓ Avoid carrying sheet goods that could act as a sail allowing the wind to blow you over.
- ✓ Store materials and tools where the wind can't move them.

1.9 SWS Alignment

Field Guide Topic	SWS Detail
Fire Safety Pg. 20	
Carbon Monoxide (CO) Pg. 21	2.0105.1 Combustion Worker Safety, 2.0201.2 Combustion Safety, 2.0201.1 Combustion Appliance Zone (CAZ) Testing

Field Guide Topic	SWS Detail
Causes of Carbon Monoxide (CO) Pg. 22	
Smoke and Carbon Monoxide (CO) Alarms Pg. 23	
Smoke Alarms Pg. 23	2.0301.1 Smoke Alarm
CO Alarms Pg. 24	2.0301.2 Carbon Monoxide Alarm or Monitor 2.0201.2 Combustion Safety
Gas Range and Oven Safety Pg. 25	2.0100.1 Global Worker Safety, 2.0201.2 Combustion Safety
Reducing Moisture Problems Pg. 28	2.0401.1 Air Sealing Moisture Precautions
Symptoms of Moisture Problems Pg. 30	2.0401.1 Air Sealing Moisture Precautions
Solutions for Moisture Problems Pg. 31	2.0404.1 Stand-Alone Dehumidifiers, 2.0404.4 Basements—Dehumidification 3.1488.3 Covers for Sump Pumps, Drains, Pits, and other Intentional Slab Penetrations
Crawl Space Moisture and Safety Issues Pg. 35	2.0111.2 Crawl Spaces—Pre-Work Qualifications, 2.0111.3 Crawl Spaces—Debris Removal, 2.0403.2 Closed Crawl Spaces—Ground Moisture Barriers, 2.0403.1 Vented Crawl Spaces—Ground Moisture Barrier
Ground Moisture Source-Reduction Pg. 36	
Pollutants Source Control Pg. 37	

Field Guide Topic	SWS Detail
Radon Pg. 37	2.0501.1 Radon—Air Sealing Considerations, 2.0501.2 Radon—Basements and Crawl spaces
Asbestos Containing Materials (ACM) Pg. 38	2.0104.1 Insulation Worker Safety
Lead-Safe Procedures Pg. 39	2.0100.1 Global Worker Safety
Electrical Safety Pg. 43	2.0100.1 Global Worker Safety
Decommissioning Knob-and-Tube Wiring Pg. 44	4.1001.2 Knob and Tube Wiring
Constructing Shielding for Knob-and-Tube Wiring Pg. 45	2.0601.1 Knob and Tube Wiring
Worker Health and Safety Pg. 46	2.0100.1 Global Worker Safety, 2.0106.1 Ventilation Worker Safety
Commitment to Safety Pg. 47	
New Employees Pg. 48	
Driving Pg. 49	
Lifting and Back Injuries Pg. 50	
Respiratory Health Pg. 52	2.0100.1 Global Worker Safety, 4.9901.1 General Information on Spray Polyurethane Foam (SPF), 2.0106.1 Ventilation Worker Safety
Hazardous Materials Pg. 53	2.0110.1 Material Selection, Labeling, and Material Safety Data Sheets (MSDSs), 2.0100.1 Global Worker Safety
Equipment for Personal and Crew Safety Pg. 54	2.0100.1 Global Worker Safety
Falls Pg. 54	2.0100.1 Global Worker Safety

Field Guide Topic	SWS Detail
Tool Safety Pg. 56	2.0100.1 Global Worker Safety
Repetitive Stress Injuries Pg. 57	
Safety for Crawl Spaces and Other Confined Areas Pg. 58	2.0701.1 Crawl Spaces—Providing Access, 2.0701.2 Crawl Space Information Sign
Safety for Extreme Weather Pg. 59	2.0100.1 Global Worker Safety

Chapter 2: Energy Audits and Quality Control Inspections

This chapter outlines the operational process of energy audits, work orders, and final inspections as practiced by non-profit agencies and contractors working in the Department of Energy's (DOE) Weatherization Assistance Program (WAP).

WAP's Mission

The mission of DOE WAP is **"To reduce energy costs for low-income families, particularly for the elderly, people with disabilities, and children, by improving the energy efficiency of their homes while ensuring their health and safety."**

This chapter also discusses ethics, customer relations, and customer education.

Why We Care about Health and Safety

The health and safety of customers must never be compromised by weatherization. Harm caused by our work would hurt our clients, ourselves, and our profession. Weatherization work can change the operation of heating and cooling systems, alter the moisture balance within the home, and reduce a home's natural ventilation rate. Weatherization workers must take all necessary precautions to avoid harm from these changes.

2.1 Purposes of an Energy Audit

An energy audit evaluates a home's existing condition and outlines improvements to the energy efficiency, health, safety, and durability of the home.

Depending on the level of the audit, an energy audit may include some or all of the following tasks.

- Inspect the building and its mechanical systems to gather the information necessary for decision-making.
- Evaluate the current energy consumption along with the existing condition of the building.
- Diagnose areas of energy waste, health and safety, and durability problems related to energy conservation.
- Recommend energy conservation measures (ECMs).
- Diagnose health and safety problems and how they may be affected by the proposed ECMs.
- Predict savings expected from ECMs.
- Estimate labor and material costs for ECMs.
- Encourage behavioral changes that reduce energy waste.
- Educate residents about their energy usage and your proposed energy retrofits.
- Provide written documentation of the energy audit and the recommendations offered.

2.1.1 Energy-Auditing Judgment and Ethics

The auditor's good decisions are essential to the success of a weatherization program. Good decisions depend on judgment and ethics.

- ✓ Understand the requirements of the WAP program.
- ✓ Treat every client with the same high level of respect.
- ✓ Communicate honestly with clients, coworkers, contractors, and supervisors.
- ✓ Know the limits of your authority, and ask for guidance when you need it.
- ✓ Develop and maintain the inspection, diagnosis, and software skills necessary for WAP energy auditing.

- ✓ Choose ECMs according to their cost-effectiveness along with DOE and State policy, and not according to personal preference or customer preference.
- ✓ Don't manipulate Weatherization Assistant or a priority list to select or avoid particular ECMs.
- ✓ Avoid personal bias in your influence on purchasing, hiring, and contracting.

2.1.2 Weatherization-Client Record-Keeping

The client file is the record of a weatherization completion. The client file may contain all of the following items, depending on State WAP policy.

1. Certified application that includes required demographic and housing information.
   a. Work Permit or Tenant Landlord Agreement
   b. Initial energy audit completed on a standardized audit format package
2. Required health and safety testing and observations including the following:
   a. Itemized notation for each potential health-and-safety issue: asbestos, lead paint, VOCs, moisture/mold. (Include Mold/Moisture Assessment Form if needed)
   b. Document client's and occupants' health concerns.
   c. Deferral form if needed.
   d. Combustion efficiency and safety test results
3. Documentation of Client Education
4. Work order for the contractor(s) including appropriate instructions, photos, and specifications as needed.
5. Copy of the pre-work notification of work-practice requirements for Lead Safe Renovation & Repair (Lead RRP) signed and dated by the client when applicable.

6. A signed and dated In-Process quality-control (QC) report on a minimum of 50% of the jobs
7. Itemized contractor invoice(s) tied to the work write-up with each measure delineated:
   a. For all work in pre-1978 housing, the invoice must include a certification and signature of the licensed MA Lead-Safe Renovator Supervisor that work was completed consistent with MA DLS RRP and DOE LSW requirements;
8. Final QC Report on a designated standardized form signed and dated by the inspector:
   a. Client Sign-Off Form acknowledging that the work was completed and inspected.
   b. Building Weatherization Report (BWR)
9. Additional requirements are outlined in the WAP Policies

2.2 Customer Relations

Customer satisfaction depends on the energy auditor's reputation, professional courtesy, and ability to communicate.

2.2.1 Communication Best Practices

Making a good first impression is important for customer relations. Friendly, honest, and straightforward communication creates an atmosphere where the auditor and clients can discuss problems and solutions openly.

Setting priorities for customer communication is important for the efficient use of your time. Auditors must communicate clearly and directly. Limit your communication with the customer to the most important energy, health, safety, and durability issues.

- ✓ Introduce yourself, identify your agency, and explain the purpose of your visit.
- ✓ Make sure that the customer understands the goals of the WAP program.
- ✓ Listen carefully to your client's reports, complaints, questions, and ideas about their home's energy efficiency.
- ✓ Ask questions to clarify your understanding of your client's concerns.
- ✓ Before you leave, give the client a quick summary of what you found.
- ✓ Avoid making promises until you have time to finish the audit, produce a work order, and schedule the work.
- ✓ Make arrangements for additional visits by crews and contractors as appropriate.

2.2.2 Customer Interview

The customer interview is an important part of the energy audit. Even if customers have little understanding of energy and buildings, they can provide useful observations that can save you time and help you choose the right ECMs.

- ✓ Ask the customer about comfort problems, including zones that are too cold or hot.
- ✓ Ask the customer to see their energy bills if you haven't already evaluated them.
- ✓ Ask the customer if there is anything relevant they notice about the performance of their mechanical equipment.
- ✓ Ask about family health, especially respiratory problems afflicting one or more family members.
- ✓ Discuss space heaters, fireplaces, attached garages, and other combustion hazards.

- ✓ Discuss drainage issues, wet basements or crawl spaces, leaky plumbing, and mold infestations.
- ✓ Discuss the home's existing condition and how the home may change after the proposed retrofits.
- ✓ Identify existing damage to finishes to insure that weatherization workers aren't blamed for existing damage. Document damage with digital photos.
- ✓ Ask the client to sign the necessary permissions.

2.2.3 Deferral of Weatherization Services

When you find major health, safety, or durability problems in a home, sometimes it's necessary to postpone weatherization services until those problems are solved. The problems that are cause for deferral of services include but are not limited to the following.

- Major roof leakage.
- Major foundation damage.
- Major moisture problem including mold infestation.
- Major plumbing problems.
- Human or animal waste in the home.
- Major electrical problems or fire hazards.
- The home is vacant or the client is moving.
- The home is for sale.

Behavioral problems may also be a reason to defer services to a customer, including but not limited to the following.

- Illegal activity on the premises.
- Occupant's hoarding makes difficult or impossible to perform a complete audit.
- Lack of cooperation by the customer.

Matching Funds to Avoid Deferrals

Auditors should assist customers in obtaining repair funds from the following sources whenever possible:

- Department of Housing and Urban Development (HUD) Emergency Repair Funds
- HUD Healthy Homes Initiative Funds
- Department of Agriculture (USDA) Rural Development Funds
- State and local repair funds
- Church, charity, and foundation funds

2.3 Parts of an Energy Audit

Visual inspection, diagnostic testing, and numerical analysis are three types of energy auditing procedures we discuss in this section. These procedures should aid you in evaluating all the possible ECMs that are cost-effective according to DOE-approved software: Weatherization Assistant or approved equivalent. *See "SIR Calculations with Weatherization Assistant" on page 73.*

To understand the features of Weatherization Assistant, consult the DOE *Weatherization Assistant training site*.

The energy audit must also propose solutions to health and safety problems related to the energy conservation measures.

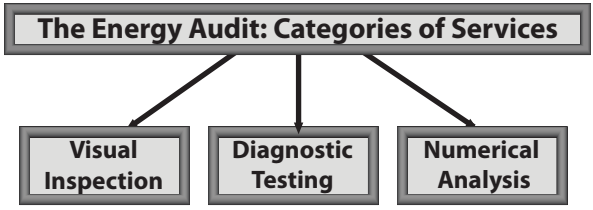

2.3.1 Visual Inspection

Visual inspection orients the energy auditor to the physical realities of the home and home site. Among the areas of inspection are these.

- Health and safety issues
- Building air leakage
- Building insulation and thermal resistance
- Heating and cooling systems
- Ventilation fans and operable windows
- Baseload energy uses
- The home's physical dimensions: area and volume

2.3.2 Diagnostic Testing

Measurement instruments provide important information about a building's unknowns, such as air leakage and combustion efficiency. Use these diagnostic tests as appropriate during the energy audit.

- Blower door testing: A variety of procedures using a blower door to evaluate the airtightness of a home and parts of its air barrier.
- Duct leakage testing: A variety of tests using a blower door and pressure pan to locate duct leaks.
- Combustion safety and efficiency testing: Combustion analyzers sample combustion by-products to evaluate safety and efficiency.
- Infrared scanning: Viewing building components through an infrared scanner shows differences in the temperature of building components inside building cavities.

- Appliance consumption testing: Refrigerators are monitored with logging watt-hour meters to measure electricity consumption.

2.3.3 SIR Calculations with Weatherization Assistant

Energy auditors currently use Weatherization Assistant (WA)or other DOE-approved software, to determine which ECMs have the highest Savings-to-Investment Ratio (SIR). The ECMs with the highest SIRs are at the top of the WA priority list for a particular home.

SIR = INITIAL INVESTMENT ÷ LIFETIME SAVINGS

The DOE also approves priority lists based on the results of Weatherization Assistant or other DOE-approved software on typical homes within the State. The priority list is then used instead of the software, which saves time for evaluating common home types. Energy auditors still use software to evaluate ECMs for uncommon home types.

DOE WAP and the State WAP program require that ECMs have an SIR greater than 1. ECMs with higher SIRs should be installed before or instead of ECMs with lower SIRs.

Whether a weatherization provider uses software or a priority list, the auditor must collect information to inform decisions about which ECMs to choose.

- ✓ Measure the home's exterior horizontal dimensions, wall height, floor area, volume, and area of windows and doors.
- ✓ Measure the current insulation levels.
- ✓ Do a blower door test to evaluate air leakage.
- ✓ Do a combustion efficiency test to evaluate the central heating system.
- ✓ Evaluate energy bills and adjust the job's budget within limits to reflect the potential energy savings.

2.4 The Work Order

The work order is a list of materials and tasks that are recommended as a result of an energy audit. Consider these steps in developing the work order.

- ✓ Evaluate which ECMs have an acceptable savings-to-investment ratio (SIR) using software or a priority list.
- ✓ Select the most important health and safety problems to correct, as these problems are directly related to the cost-effective ECMs.
- ✓ Provide detailed specifications so that the contractors clearly understand the materials and procedures necessary to complete the job.
- ✓ Estimate the cost of the planned work.
- ✓ Inform crews or contractors of any hazards, pending repairs, and important procedures related to their part of the work order.
- ✓ Verify required permits from the local building jurisdiction, if necessary.
- ✓ Specify interim testing during air-sealing and heating-system maintenance to provide feedback for workers.
- ✓ Consider in-process inspections and schedule the final inspection for the job's final day if possible.

2.4.1 Questions about the Audit and Work Order

The inspector asks these questions during the final inspection.

- Did the auditor find all the opportunities and identify all the hazards?
- Do the audit's ECMs comply with the Weatherization Assistant computer analysis, and the SWS?
- Did the work order adequately specify the labor and materials required by the energy audit?

- Did the contractor follow the work order?
- What changes did the contractor make to the work order and were those changes authorized?
- Were the changes necessary and did they benefit the client and the WAP program?
- Is the completed weatherization job, the energy audit, and the work order aligned with State policy and the SWS?

2.5 Work Inspections

The inspector is responsible for the quality control of the weatherization process. Good inspections provide an incentive for auditors to produce good energy audits and work orders and for workers to do quality work. There are two common opportunities for inspections: in-process inspections and final inspections.

2.5.1 In-Process Inspections

Many ECMs are best inspected while the job is in progress. Visiting while the job is in progress demonstrates your commitment to getting the job done correctly. Either the energy auditor or the inspector may conduct an in-process inspection.

These measures are good candidates for in-process inspections because of the difficulty of evaluating them after completion.

- Attic air sealing, prior to installing insulation
- Dense-pack wall insulation
- Insulating closed roof cavities
- Furnace installation or tune-up
- Air-conditioning service
- Duct testing and sealing

In-process inspections are also an excellent way to provide training and technical assistance.

2.5.2 Final Inspections

A certified inspector completes a final inspection before the weatherization job is reported to DOE as a completion. To the degree possible, someone other than the original auditor should complete the final inspection.

Final inspections ensure that weatherization services were provided as specified in the work order, and that the home is left in a safe condition and free of left over job-site debris. The weatherization agency does the final inspection for quality control.

Completing the final inspection with the WAP Contractor on site allows the inspector and contractor to review the work scope and correct deficiencies without requiring a return to the home. Verify the following.

- ✓ Confirm that the crew installed the approved materials in a safe, effective, and neat way.
- ✓ Confirm that the crew matched existing finish materials for measure installation and necessary repairs.
- ✓ Review all completed work with the client. Confirm that the client is satisfied.
- ✓ Verify that combustion appliances operate safely. Do worst-case draft tests and CO tests as appropriate.
- ✓ Do a final blower door test with simple pressure diagnostics if appropriate.
- ✓ Use an infrared scanner, if available, to inspect insulation and air-sealing quality.
- ✓ Specify corrective actions whenever the work doesn't meet standards.
- ✓ Verify that the crew used the correct lead-safe procedures if these procedures were necessary in installing ECMs.
- ✓ Verify that all required paperwork, with required signatures is in the client file. *See "Weatherization-Client Record-Keeping" on page 67.*

2.5.3 Quality Control Versus Quality Assurance

Quality control is an internal process of a weatherization program. Quality assurance is a third-party inspection performed by an inspector employed by the State or by the DOE.

Energy auditors may perform either quality-control or quality-assurance inspections. The following are important elements of these inspections.

- Verify compliance with specifications, job order, and energy audit.
- Provide feedback on material quality and worker performance, both good and bad.
- Issue instructions for correcting errors and omissions.
- Survey clients for level of satisfaction.
- Perform energy-conservation monitoring and evaluation, if appropriate.
- Report to the weatherization agency, the State, or the DOE about the quality of the weatherization work.

2.6 Field Monitoring

Field monitoring is the quality assurance visits conducted by the State weatherization program. The State monitor's job is similar to the agency's inspector. However, the State monitor is independent of the local weatherization agency and reports his or her inspection results to the State. The monitor describes these inspection results in these ways.

1. Strengths or areas where the agency performs well.
2. Concerns are minor problems with paperwork or job quality that the agency can easily correct.
3. Major findings, including contract violations, safety violations, or omissions of required procedures.

The monitor issues a report and the agency must respond in writing. Major findings require the agency to tell the State how the agency will correct the problems and how they will be paid for. Major findings from the DOE may require the State to propose a correction plan.

2.7 Understanding Energy Usage

A major purpose of any energy audit is to determine where energy waste occurs. With this information in hand, the energy auditor then allocates resources according to the energy-savings potential of each energy-conservation measure. A solid understanding of how homes use energy should guide the decision-making process.

Table 2-1: Top Six Energy Uses for U.S. households

Energy User	Annual kWh	Annual Therms
Heating	2000–10,000	200–1100
Cooling	600–7000	n/a
Water Heating	2000–7000	150–450
Refrigerator	500–2500	n/a
Lighting	500–2000	n/a
Clothes Dryer	500–1500	n/a

Estimates by the authors from a variety of sources.

2.7.1 Baseload Versus Seasonal Use

We divide home energy usage into two categories: baseload and seasonal. Baseload includes water heating, lighting, refrigerator, and other appliances used year round. Seasonal energy use includes heating and cooling. You should understand which of the two is dominant as well as which types of baseloads and seasonal loads are the highest energy consumers.

Many homes are supplied with both electricity and at least one source of combustion fuel. Electricity can provide all seasonal and baseload energy, however most often there is a combination of electricity and natural gas, oil, or propane. The auditor must understand whether loads like the heating system, clothes dryer, water heater, and kitchen range are serviced by electricity or by fossil fuel.

Total energy use relates directly to potential energy savings. The greatest savings are possible in homes with highest initial consumption. Avoid getting too focused on a single energy-waste category. Consider all the individual energy users that offer measurable energy savings.

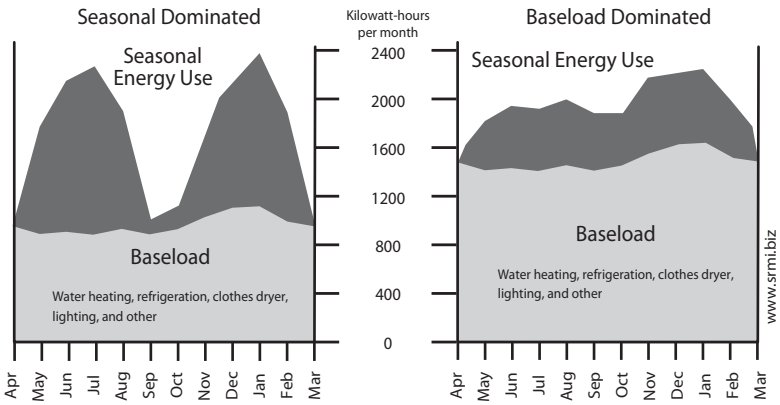

Seasonal vs. Baseload Domination of Energy Use: Homes with inefficient shells or in severe climates have large seasonal energy use and smaller baseload. More efficient homes and homes in mild climates are dominated by baseload energy uses.

Separating Baseload and Seasonal Energy Uses

To separate baseload from seasonal energy consumption for a home with monthly gas and electric billing, do these steps.

1. Get the energy billing for one full year. If the customer can't produce these bills, they can usually request a summary from their utility company.

2. Add the 3 lowest bills together.
3. Divide that total by 3.
4. Multiply this three-month low-bill average by 12. This is the approximate annual baseload energy cost.
5. Total all 12 monthly billings.
6. Subtract the annual baseload cost from the total billings. This remainder is the space heating and cooling cost.
7. Heating is separated from cooling by looking at the months where the energy is used — summer for cooling, winter for heating.
8. For cold climates, add 5 to 15 percent to the baseload energy before subtracting it from the total to account for more hot water and lighting being used during the winter months.

Table 2-2: Separating Baseload from Seasonal Energy Use

Factor and Calculation	Result
Annual total gas usage from utility bills	**1087 therms**
Monthly average gas usage for water heating Average of 3 low months gas usage (21 + 21 + 22) ÷ 3 = 21.3 therms per month	21.3 therms per month
Annual gas usage for water heating Monthly average usage multiplied by 12 12 x 21.3 = 256 therms per year	**256 therms** per year
Annual heating gas usage Annual total minus annual water-heating usage 1087 – 256 = 831 therms per year	**831 therms** per year
Annual total electric use from utility bills	**6944 kWh**
Monthly average usage for electric baseload Average of 3 low months electricity usage (375 + 372 + 345) ÷ 3 = 364 kWh per month	364 kWh per month
Annual electric usage for baseload Monthly average usage multiplied by 12 12 x 364 = 4368 kWh per year	**4368 kWh** per year
Annual heating and cooling electrical usage Annual total minus annual baseload usage 6944 – 4368 = 2576 kWh per year	**2576 kWh** per year

2.7.2 Energy Indexes

Energy indexes are useful for comparing homes and characterizing their energy efficiency. They are used to measure the opportunity for application of weatherization or home performance work.

Most indexes are based on the square footage of conditioned floor space. The simplest indexes divide a home's energy use in

either kilowatt-hours or British thermal units (BTUs) by the square footage of floor space.

A more complex index compares heating energy use with the climate's severity. BTUs of heating energy are divided by both square feet and heating degree days to calculate this index.

2.8 Customer Education

Customer education is a potent energy conservation measure. A well-designed education program engages customers in household energy management and assures the success of installed energy conservation measures (ECMs).

2.9 SWS Alignment

Field Guide Topic	SWS Detail
Purposes of an Energy Audit Pg. 65	
Energy-Auditing Judgment and Ethics Pg. 66	
Weatherization-Client Record-Keeping Pg. 67	
Customer Relations Pg. 68	
Communication Best Practices Pg. 68	
Customer Interview Pg. 69	
Deferral of Weatherization Services Pg. 70	
Parts of an Energy Audit Pg. 71	
Visual Inspection Pg. 72	
Diagnostic Testing Pg. 72	

Field Guide Topic	SWS Detail
SIR Calculations with Weatherization Assistant Pg. 73	
The Work Order Pg. 74	
Questions about the Audit and Work Order Pg. 74	
Work Inspections Pg. 75	
In-Process Inspections Pg. 75	
Final Inspections Pg. 76	
Quality Control Versus Quality Assurance Pg. 77	
Field Monitoring Pg. 77	
Understanding Energy Usage Pg. 78	
Baseload Versus Seasonal Use Pg. 78	
Energy Indexes Pg. 81	
Customer Education Pg. 82	

CHAPTER 3: WEATHERIZATION MATERIALS

This chapter focuses on materials for insulation and air sealing. It begins by discussing the introductory information on air sealing and then air sealing materials, insulation building science, and insulation materials. This information supports the next four chapters on the major parts of the building shell.

3.1 AIR-SEALING GOALS

The job description of a weatherization contractor often includes duct sealing. Perform air leakage testing and evaluation before beginning air-sealing or duct-sealing work.

Always evaluate ventilation and perform combustion-safety testing as a part of air sealing a home. *See "Whole-Building Ventilation" on page 356.*

Reducing air leakage accomplishes several goals.

- Saves energy by reducing unintentional air exchange with outdoors
- Reduces air leakage and convection around insulation, protecting its thermal resistance
- Increases comfort by reducing drafts and moderating the radiant temperature of interior surfaces
- Reduces moisture migration into building cavities
- Reduces the pathways by which fire spreads through a building

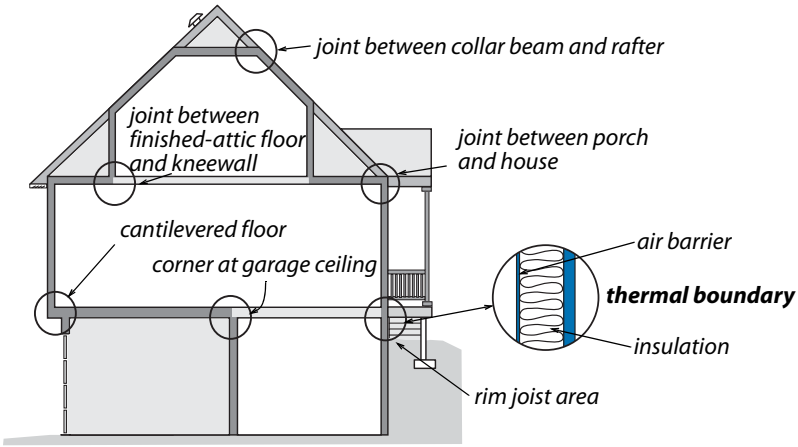

Air leaks at the thermal boundary: The air barrier and insulation, which should be adjacent to one other, are located at the thermal boundary. The insulation and the air barrier are often discontinuous at corners and transitions.

3.2 Air Sealing Safety

SWS Detail: 2.0103.1 Air Sealing Worker Safety

Air sealing reduces the exchange of fresh air in the home, and can alter the pressures within the home. Before air sealing, survey the home to identify both air pollutants that may be concentrated by air sealing efforts and open combustion appliances that may be affected by changes in house pressure.

Don't do air sealing when there are obvious threats to the occupants' health, the installers' health, or the building's durability that are related to air sealing. If any of the following circumstances are present, either postpone air sealing until they're corrected or correct the problems as part of the air-sealing work.

- Measured carbon monoxide levels exceed the suggested action level. *See "Carbon Monoxide (CO) Testing" on page 235.*

- Combustion zone depressurization exceeds the limits shown in *SWS 2.0299.1 Combustion Appliance Depressurization Limits Table*, or *"SWS Maximum CAZ Depressurization" on page 479* during a worst-case test. *See "Worst-Case CAZ Depressurization Test" on page 238.*
- Occupants will use unvented space heaters as a primary source of heat after weatherization is completed.
- The air-leakage area has moisture damage, indicated by staining, mold or rot.

3.2.1 Air Sealing and Fire Containment

SWS Detail: 4.1001.5 Dense Pack Preparation, 3.1001.1 Penetrations and Chases, 3.1001.2 Chase Capping, 3.1001.3 Walls open to Attic—Balloon Framing and Double Walls

Fire, flame and smoke spread through the paths of least resistance. Many building assemblies harbor concealed voids or cavities within walls, ceilings and attics. During a fire, these pathways spread fire and make fire-fighting difficult.

In new buildings, the IRC requires builders to seal all shafts and hidden air leaks between living spaces and intermediate zones with fire-blocking materials.

The building codes define a fire-block as a material installed to "resist the free passage of flame through concealed spaces." Fire-blocking materials don't need to be non-combustible.

We recommend that you use fire-blocking materials, discussed next, when doing retrofit air sealing.

Insulation reduces heat transmission by resisting the conduction, convection, and radiation of heat through the building shell. Insulation combined with an air barrier creates the thermal envelope between the conditioned indoors and outdoors.

Installing insulation is one of the most effective energy-saving measures. You can ensure insulation's safety and effectiveness by following these guidelines.

- ✓ Install insulation in a way that enhances fire safety and doesn't degrade it. *See "Preparing for Attic Insulation" on page 126.*
- ✓ Comply with lead-safe practices when disturbing paint in pre-1978 homes. *See "Lead-Safe Work Practices" on page 41.*
- ✓ Prevent air movement through and around the insulation with an effective air barrier. Make sure that the air barrier and insulation are aligned (next to one another).
- ✓ Protect insulation from moisture by repairing roof and siding leaks, providing site drainage, and by controlling vapor sources within the home. *See "Insulation Durability" on page 107.*
- ✓ Install insulation to meet or exceed the guidelines of the International Energy Conservation Code (IECC) 2012 and the DOE's Standardized Work Specifications.

3.3 Air Sealing Materials

Air barriers must resist severe wind pressures. Use strong air barrier materials like structural wood paneling, drywall, or sheet metal to seal large air leaks, especially if your region has powerful winds. Attach these strong materials with mechanical fasteners and seal them with caulk or adhesive. If a technician needs to access a shaft or penetration in the future use a caulk that isn't a strong adhesive, such as acrylic latex.

Use caulk by itself for sealing small cracks. Use liquid foam for cracks larger than $^{1}/_{4}$ inch.

3.3.1 Air Barrier Materials

Air barrier materials should themselves be air barriers and also rated as fire blocks. *See Table 12-1 on page 464.*

Plywood, OSB, etc.

Three-quarter-inch plywood, OSB, and particle board are IRC-approved fire-blocking materials, and they're strong enough to resist windstorms. Attach these structural sheets with screws or nails along with any sealant or adhesive that effectively air seals the joint.

Drywall

Half-inch drywall constitutes a 15 minute thermal barrier, and is also an ignition barrier. When air sealing a fire-rated assembly in a commercial or multi-family building, choose five-eighths -inch drywall and a fire-rated caulking. Fasten drywall with screws and construction adhesive. Don't use drywall in damp locations where it may get wet.

Steel and Aluminum Sheet Metal

Being non-combustible, sheet metal is used to seal around chimneys and other heat producing components. To seal around chimneys, cut the galvanized steel accurately, with less than a 1/8-inch gap, so that you can seal the gap with high temperature, non combustible caulk.

Foam Board

Foam board may be a desirable product for air sealing; however it has less structural strength and fire resistance than the other materials discussed previously.

Cross-Linked Polyethylene House Wrap

House wrap and polyethylene sheeting are air barriers. These flexible materials aren't rated as fire-blocks, and they are structurally weak.

3.3.2 Stuffing Materials

Stuffing materials are used to insulate a cavity, to give the cavity a bottom, or to serve as supporting part of an air seal.

Backer Rod

Backer rod and caulking are the most reliable and long-lasting air seals. Backer rod is closed-cell polyethylene foam that creates a bottom barrier in a gap before caulking. Backer rod doesn't bond to the caulking, and so prevents three-sided adhesion that could tear the caulking bead apart with the materials' expansion and contraction of temperature extremes.

Fiberglass Batts

Fiberglass batts reduce air convection in cavities where they're installed. However, fiberglass batts are air permeable, even if compressed. Batts can support two-part foam sprayed over the opening of a cavity. Fiberglass batting is a good stuffing material for use with non-combustible caulk for penetrations through fire-rated assemblies because of its low combustibility.

Blown Cellulose or Fiberglass

Blown cellulose and fiberglass reduce air convection and air leakage through closed cavities. However neither material is an air barrier even when blown at high densities. Both are considered fire-blocks when installed in closed cavities because they block the passage of flames.

3.3.3 Caulking and Adhesives

The adhesion and durability of caulking and adhesives depends on their formulation and on the surfaces to which they're applied. Some caulks and adhesives are sensitive to dirt and only work well on particular surfaces, while others are versatile and dirt-tolerant. Remove debris and clean the joint to create a long lasting seal.

Water-Based Caulks

A wide variety of paintable caulks are sold under the description of acrylic latex and vinyl. These are the most commonly used caulks and the easiest to apply and clean up. Siliconized latex caulks are among the most adhesive and durable sealants in this group. Don't apply water-based caulks to building exteriors when rain is forecast since they aren't waterproof until cured, and they stain nearby materials if they are rained upon while curing. Don't apply water-based caulks during freezing weather.

Silicone Caulk

Silicone has great flexibility, but its adhesion varies among different surfaces. Silicone is easy to gun even in cold weather. Silicone isn't as easy to clean up as water based caulks, though it's easier than polyurethane or butyl. Silicone isn't paintable, so choose an appropriate color. High-temperature silicone may be used with galvanized steel to air seal around chimneys if labeled ASTM E136, meaning that the caulk is non-combustible.

Polyurethane Caulk

Polyurethane has the best adhesion and elasticity of any common caulk. It works very well for cracks between different materials like brick and wood. Polyurethane resists abrasion and is used to seal critical joints in concrete slabs and walls. It is also good for sealing the fastening fins of windows to walls. Polyurethane is almost as sticky and adhesive as a construction adhesive. Cleaning it up is difficult so neat workmanship is essential.

Polyurethane caulk doesn't gun easily, and should be room temperature or higher. Polyurethane caulk doesn't hold paint.

Acoustical Sealant

This solvent-based or water-based adhesive is used to seal laps in polyethylene film and house wrap. Acoustical sealant is very sticky, adheres well to most construction materials, and remains flexible. Acoustical sealant is used to seal building assembles for sound deadening. Acoustical sealant is also used to seal the seams of polyethylene vapor barriers and ground moisture barriers.

Water Soluble Duct Mastic

Duct mastic is the best material for sealing ducts, including cavities used for return ducts. A messy but highly effective sealant, duct mastic can be applied with a thickness of $^{1}/_{8}$-inch with a brush or rubber glove. Have a bucket of warm water handy to clean your gloved hands and a rag to dry the gloves. Spread the mastic and use fiberglass fabric web tape to reinforce cracks more than $^{1}/_{8}$-inch in diameter. Thorough cleaning of dust and loose material isn't necessary. Mastic bonds tenaciously to everything, including skin and clothing.

Stove Cement

Stove cement is a material that can withstand temperatures up to 2000° F. It is used to seal wood stove chimneys and to cement wood stove door gaskets in place.

Non-Combustible Caulk

Some elastomeric caulks are designed specifically for use in fire-rated assemblies. They are labeled ASTM E136, meaning that the caulk is non-combustible. Use this type of sealant when sealing penetrations through fire-rated assemblies in multifamily buildings.

Fire-Rated Mortar

Used with other air-sealing materials to seal various sized holes and gaps in multifamily buildings with fire-rated building assemblies. This mortar covers the foam to create a non-combustible surface for an air seal.

Construction Adhesives

Construction adhesives are designed primarily to bond materials together. But they also create an air seal if applied continuously around the perimeter of a rigid material. They are often used with fasteners like screws or nails but can also be used by themselves. Some construction adhesives act like contact adhesives to bond lightweight materials without mechanical fasteners.

Use specially designed construction adhesives for polystyrene foam insulation because many general-purpose adhesives decompose the foam's surface.

3.3.4 Liquid Foam Air Sealant

Liquid closed-cell polyurethane foam is a versatile air sealing material. Closed-cell foam is packaged in a one-part injectable variety and a two-part sprayable variety. It has a high R-value per inch and is ideal for insulating and air sealing small, poorly insulated, and leaky areas in a single application.

Installation is easy compared to other materials to accomplish the same air sealing tasks. However, cleanup is difficult enough that you probably don't want to clean up multiple times on the same job. Instead identify all the spots needing foam application, make a list, and foam them one after another.

One-Part Foam

This gap filler has tenacious adhesion. One-part foam is best applied with a foam gun rather than the disposable cans. Cleanup is difficult if you're careless. When squirted skillfully

into gaps, one-part foam reduces air leakage, thermal bridging, and air convection. One-part foam isn't effective or easy to apply to gaps over about one inch or to bottomless gaps. This product can leave small air leaks because it cracks when the materials around it move or shift.

Two-Part Foam

Good for bridging gaps larger than one inch. Two-part foam is popular for use with rigid patching materials to seal large openings. Cut foam board to close-enough tolerances around obstacles and fill the edges with the two-part foam. Two-part foam should be sprayed to at least an inch of thickness when it serves as an adhesive for foamboard patches over large holes for strength.

Foam Construction Adhesive

Polyurethane foam dispensed from foam guns is an excellent adhesive for joining many kinds of building materials. It works well for joining foam sheets together into thick slabs for vertical access doors and attic hatches.

One-part foam: A contractor uses an applicator gun to seal spaces between framing members and around windows.

Two-part foam: A contractor air seals and insulates around an attic hatch dam with two-part spray foam.

3.4 Insulation Building Science

SWS Details: 4.1001.6 Unvented Roof Deck—Preparation for Spray Polyurethane Foam, 4.1001.7 Vented Roof Deck—Preparation for SPF

Insulation reduces heat transmission by resisting the conduction, convection, and radiation of heat through the building shell. Insulation combined with an air barrier creates the thermal envelope between the conditioned indoors and outdoors.

Installing insulation is one of the most effective energy-saving measures. You can ensure insulation's safety and effectiveness by following these guidelines.

- ✓ Install insulation in a way that enhances fire safety and doesn't degrade it. *See "Safety Preparations for Attic Insulation" on page 127.*
- ✓ Comply with lead-safe practices when disturbing paint in pre-1978 homes. *See "Lead-Safe Work Practices" on page 41.*
- ✓ Prevent air movement through and around the insulation with an effective air barrier. Make sure that the air barrier and insulation are aligned (next to one another) using procedures outlined starting on *page 113.*
- ✓ Protect insulation from moisture by repairing roof and siding leaks, providing site drainage, and by controlling vapor sources within the home. *See "Solutions for Moisture Problems" on page 31.*
- ✓ Install insulation to meet or exceed the guidelines of the International Energy Conservation Code (IECC) 2012 and the DOE's Standardized Work Specifications.

3.5 Insulation Material Characteristics

SWS Detail: 4.1003.7 Ignition and Thermal Barriers—Spray Polyurethane Foam

The purpose of insulation is to provide thermal resistance that reduces the rate of heat transmission through building assemblies. Characteristics such as R-value per inch, density, fire safety, vapor permeability, and airflow resistance help weatherization specialists choose the right insulation for the job.

3.5.1 Fibrous Insulation Materials

Fibrous insulation materials are the most economical insulations for buildings. If blown at a high density, fibrous insulations aren't air barriers themselves, but they may contribute to the airflow resistance of a building assembly that functions as an air barrier. The term *mineral wool* describes both fiberglass and *rock wool*. Rock wool is both a generic term and a trade name. We use rock wool in the generic sense as an insulating wool spun from rocks or slag. Fiberglass is wool spun from molten glass.

Cellulose was once made from virgin wood fiber under trade names like Balsam Wool. Now cellulose is manufactured primarily from recycled paper, treated with a fire retardant.

A vapor permeable air barrier should cover fibrous insulation installed vertically or horizontally in human-contact areas to limit exposure to fibers, which may cause respiratory distress.

Fiberglass Batts and Blankets

Most fiberglass batts are either 15 inches wide or 23 inches wide to fit 16-inch or 24-inch spacing for wood studs or joists. However, manufacturers also provide 16-inch or 24-inch widths for metal stud construction.

The advertised R-values of batts vary from 3.1 per inch to 4.2 per inch depending on density. Installed fiberglass R-values may be 5% to 30% less than advertised depending on installation quality and the effectiveness of the assembly's air barrier.

Evaluating batt performance: The thermal performance of batts depends on density and installation.

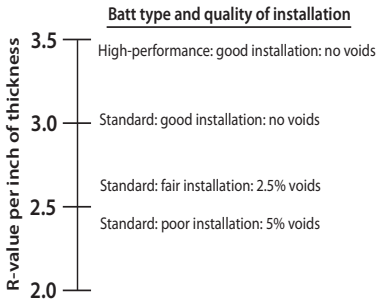

Installers must cut and fit batts very carefully. Batts achieve their advertised R-value only when they are touching all six sides of the cavity it inhabits.

See "Open-Cavity Wall Insulation" on page 173.

Fiberglass blankets are typically three to six feet wide. Blankets come in a variety of thicknesses from 1 to 6 inches. Fiberglass blankets are used to insulate metal buildings, to insulate crawl spaces from the inside, and to insulate water heaters.

Although fiberglass doesn't absorb much moisture, the facings on blankets and batts can trap water in the batts, which can dampen building materials and provide a water source for pests.

Facings for Fiberglass Batts

Insulation manufacturers make batts and blankets with a number of facings, including the following.

- Unfaced: Vapor permeable and Class-A fire rating of ≤25 flame spread.
- Kraft paper: A Class II vapor retarder that is flammable (Class-C) with a flame spread ≥150.
- Foil-kraft: foil bonded to kraft paper. A vapor barrier with a flame spread of ≥75.
- Foil-skrim-kraft (FSK): Aluminum foil bonded to kraft paper with skrim netting in-between as reinforcement. A

vapor barrier available as a Class-A material with a flame spread of ≤25.

- White poly-skrim-kraft (PSK): White polyvinylchloride bonded to kraft paper with skrim netting in-between as reinforcement. A vapor barrier available as a Class A fire-rated material with a flame spread of ≤25. The white surface maximizes light reflection.

Blown Fiberglass

Loose fiberglass is blown in attics from 0.4 to 0.6 pcf and at that density the R-value is around 3.2 per inch. Blown fiberglass is non-combustible as a virgin product. However, some blown fiberglass is made from chopped batt waste that contains a small amount of combustible binder.

Fiberglass manufacturers now provide two blowing products, one for standard densities of up to about 1.4 pcf, and another for dense-packing to more than 2.0 pcf.

In closed cavities, installers blow fiberglass from 1.2 to 2.2 pcf, with the R-value per inch varying from 3.6 to 4.2. Higher density achieves a higher R-value. The high-density fiberglass is typically reserved for walls where the superior resistance to settling, airflow, and convection has extra value in resisting airflow driven by the chimney effect.

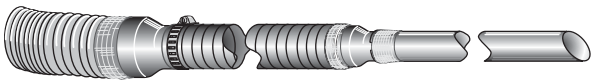

Insulation hoses, fittings, and the fill tube: Smooth, gradual transitions are important to the free flow of insulation.

Blown Cellulose

Cellulose is the most inexpensive insulation and among the easiest insulations to install. Loose cellulose is blown in attics from 0.6 to 1.2 pcf and at that density range, the R-value is around 3.7

per inch. Expect around 15% settling within five years after installation.

In wall cavities, cellulose is blown at a higher density of between 3.5 to 4.0 pcf, to prevent settling and to maximize its airflow resistance. At that high density, cellulose's R-value per inch is around 3.4. Evaluate the strength of wall cladding before blowing a wall with cellulose to prevent damage during installation.

Cellulose absorbs up to 130% of its own weight in water. Before anyone discovers a moisture problem, the cellulose could be soaked, shrunken, double its dry weight, and far less thermally resistant. Avoid using cellulose in regions with an annual average precipitation of more than 50 inches or an annual average relative humidity of more than 70%. We believe that cellulose shouldn't be installed in the following places regardless of climate.

- Floor cavities above crawl spaces or unconditioned basements
- Crawl space walls

Use caution in horizontal or sloped closed roof cavities. Cellulose is not recommended if potential moisture issues exist.

Rock Wool

Rock wool is a type of mineral wool like fiberglass. Rock wool has a small market share in North America. Rock wool batts have similar R-values per inch as fiberglass batts and contain flammable binders. Rock wool itself is non-combustible so blown rock wool doesn't burn.

Rock wool is also the most moisture-resistant insulation discussed here. In rainy and humid climates, rock wool is the least likely insulation to harbor moisture or support pests.

Damp Spray Fibrous Insulation

Installers mix fibrous insulation with sprayed water and a small amount of adhesive in damp-spray applications either in open

cavities or directly adhered to building surfaces. Sprayed cellulose contains a non-corrosive fire retardant to prevent metal corrosion when used in contact with metal building components.

3.5.2 Operating the Insulation Blowing Machines

SWS Detail: 4.1001.5 Dense Pack Preparation

Perform these important steps before and during insulation-blowing.

- ✓ Verify that the electrical source can provide the ampere draw of the insulation machine.
- ✓ Measure the pressure created by a blowing machine by connecting the hose to a fitting attached to a manometer.
- ✓ Close the feed gate and turn the air to the highest setting. The blowing machine should develop 2.9 pounds per square inch (psi) or 80 inches of water (IWC) with the feed gate open and agitator off and 60 IWC and 2.5 psi with the agitator on and feed gate closed. For other types of fibrous insulation, check manufacturer specifications for blowing machine set up.
- ✓ Verify that you're blowing the correct density of fibrous insulation by using the bag's weight or the manufacturer's coverage tables.

Blower pressure gauge: For blowing closed cavities, blower pressure should be at least 80 IWC or 2.9 psi. Measure the pressure with maximum air, feed gate closed, and agitator on.

3.5.3 Spray Foam Insulation Materials

SWS Details: 4.1001.6 Unvented Roof Deck—Preparation for Spray Polyurethane Foam, 4.1001.7 Vented Roof Deck—Preparation for SPF, 2.0100.3 Global Worker Safety

Spray Polyurethane Foam (SPF) is combustible and creates toxic smoke. Foam insulation usually requires covering with a thermal barrier or an ignition barrier, discussed in *"Fire Protection for Foam Insulation" on page 104*. SPF comes in two formulations: closed-cell and open-cell. Both are described below.

Spray foam is an insect-friendly material that can aid termites and carpenter ants in establishing a colony in wood structures. Mitigate all sources of ground water before installing foam near a foundation. When foam is installed on the outside of foundations, the surrounding soil should be treated with a termiticide if necessary. Inside a crawl space, foam must never provide a direct link from the ground to wood materials. The International Residential Code (IRC) forbids foam below grade in "very heavy" termite-infested areas.

Caution: SPF is hazardous to installers. Installers must wear special personal protective equipment and ventilate spaces during installation. SPF can also harm occupants who breathe the toxic vapors during installation. SPF requires precise mixing of the two components at specific temperature ranges. Improperly mixed or installed spray foam can emit vapors for months or years resulting in long-term respiratory hazards.

Closed-Cell Spray Polyurethane Foam

Closed-cell polyurethane spray foam (SPF) is an air barrier and a vapor barrier and is the most expensive insulation discussed here. Closed-cell SPF is a good value when space is limited, where an air or vapor barrier is needed, or where its structural strength and durability are needed.

Spray foam professionals install closed-cell SPF from two 55-gallon containers through hoses and a nozzle that mix the material. The closed-cell foam installs at approximately 2 pcf density and achieves an R-value of 6 or more per inch. However, roofing applications call for a density near 3 pcf.

Closed-cell polyurethane foam is also packaged in smaller containers in the following products.

- One-part high-expanding foam for air sealing.
- One-part low-expanding foam for air sealing.
- Two-part high-expanding foam for air sealing and insulation of surfaces.

Open-Cell Polyurethane Spray Foam and Injectable Foam

Polyurethane open-cell foam is installed at between 0.5 pcf to 1.0 pcf and achieves an R-value of around 3.7 per inch to 4.7 per inch depending on density.

These open-cell formulations are injected into a hole, one inch or smaller, through an injection nozzle and not a fill tube. (The plastic fill tube would clog and isn't cleanable.) The open-cell foam can subject a wall cavity to some pressure, so evaluate wall-cladding strength before injecting it.

Open-cell foam can absorb both water vapor and liquid water. Open-cell foam can hold moisture and become a medium for mold growth. We recommend that contractors don't install low-density spray foam in the following locations.

- Underside of roof decking
- Underside of floor decking above crawl spaces
- Crawl space walls

3.5.4 Fire Protection for Foam Insulation

SWS Detail: 4.1003.7 Ignition and Thermal Barriers—Spray Polyurethane Foam

Plastic foam is the generic term used by the IRC 2012 for both rigid and spray foams. Plastic foams are combustible, and create toxic smoke when they burn. The IRC 2012 requires a thermal barrier (half-inch drywall) for spray foam in all living areas and storage areas. Instead of a thermal barrier, installers may use an ignition barrier (1.5 inches of fibrous insulation or intumescent paint) to cover foam in attics and crawl spaces that aren't used for storage.

Fire protection requirements vary among foam formulations, according to the amount and type of fire retardant. Foam insulations generally fit into one of two classifications.

- Class 2 or Class B; flame spread 26-75
- Class 1 or Class A; ≤25 flame spread

Code jurisdictions and individual building officials vary in their interpretation of the IRC depending on these three factors.

1. Foam manufacturer's fire-testing reports, specifically flame spread.
2. The possibility that residents might use the space for storage or even living space.
3. The possibility that no one may ever enter the space again.

3.5.5 Foam Board Insulation

Foam board is combustible and creates toxic smoke. Foam insulation usually requires covering with a thermal barrier or an ignition barrier, discussed in *"Fire Protection for Foam Insulation" on page 104*.

Foam board is an insect-friendly material that can aid termites in establishing colonies in wood structures. Mitigate all sources of ground water before installing foam near a foundation. When foam is installed on the outside of foundations, the surrounding soil should be treated with a termiticide. Inside a crawl space, foam must never provide a direct link from the ground to wood materials where termites or carpenter ants are common. The International Residential Code (IRC) forbids foam below grade in "very heavy" termite-infested areas.

Expanded Polystyrene (EPS) Foam Board

EPS foam board, sometimes called beadboard, is the most inexpensive of the foam insulations. EPS varies in density from 1 to 2 pcf with R-values per inch of 3.9 to 4.7, increasing with increasing density. EPS is packaged in a wide variety of products by local manufacturers. Products include structural insulated panels (SIPS), tapered flat-roof insulation, EPS bonded to drywall, and EPS embedded with fastening strips.

EPS is flammable and produces toxic smoke when burned. It has a low maximum operating temperature (160 degrees F) that is a concern for using EPS under dark-colored roofing or siding. EPS has shrunken in some installations.

EPS is very moisture resistant and its vapor permeability is similar to masonry materials, which makes EPS a good insulation for masonry walls.

Dense EPS (2 pcf) is appropriate for use on flat roofs and below grade. Dense EPS is also more dimensionally stable and less likely to shrink. Use weatherproof coverings to prevent degradation by ultraviolet light and freezing and thawing at ground level.

Extruded Polystyrene (XPS) Foam Board

XPS is produced by only a few manufacturers and is popular for below-grade applications. XPS is more expensive than EPS and

has an R-value of 5.0 per inch. XPS may be the most moisture-resistant of the foam boards.

XPS is flammable and produces toxic smoke when burned. XPS must be covered by a thermal barrier when installed in living spaces. XPS has a low maximum operating temperature (160 degrees F) that is a concern for using XPS under shingles or dark-colored siding. XPS has shrunken in some installations. Use weatherproof coverings to prevent degradation by ultraviolet light and freezing and thawing at ground level.

Polyisocyanurate (PIC) Foam Board

PIC board has the highest R-value per inch (R-6 or a little more) of any common foam board. PIC is packaged with a vapor permeable facing or an aluminum-foil (vapor barrier) facing. PIC is expensive but worth the cost when the thickness of insulation is limited.

PIC is combustible and produces toxic smoke during a fire. However some products have fire retardants that allow installation in attics and crawl spaces without a thermal barrier or ignition barrier.

PIC has a low maximum operating temperature (<200 degrees F) that may be a concern for using PIC under dark-colored roofing or siding. Use the high-density (3 pcf) PIC board for low-sloping roof insulation.

Polystyrene Beads

Polystyrene (EPS) beads can be poured or blown into cavities. The cavities must be airtight or the beads will escape, making an annoying mess. EPS beads have an R-value between 2.2 and 2.5 per inch. Beads work well for filling hollow masonry walls.

Vermiculite and Perlite

These expanded minerals are pour-able and used when a non-combustible insulation or high temperature insulation is

needed. R-value per inch is between 2.0 and 2.7 per inch. These products are good for insulation around single-wall chimney liners to prevent condensation in the liner. Existing vermiculite may contain asbestos, and it must not be disturbed by anyone except a licensed asbestos abatement specialist.

3.6 Insulation Safety and Durability

Insulation activities require awareness about safety. Reference the following safety-related sections of this guide if necessary.

- ✓ *See "Asbestos Containing Materials (ACM)" on page 38.*
- ✓ *See "Decommissioning Knob-and-Tube Wiring" on page 44.*
- ✓ *See "Respiratory Health" on page 52.*

The following fire-safety and durability issues are particularly important to installing foam insulation.

- Foam insulation requires a thermal barrier covering of at least half-inch drywall when installed in a living space.
- Foam may require an ignition barrier when installed in attics or crawl spaces or it may not.
- A *thermal barrier* is a material, usually drywall, that protects combustible materials behind it from heat and flame creating a fire.
- An *ignition barrier* is designed to delay the ignition of the material it protects. Ignition barriers include plywood, galvanized steel, damp-spray fiberglass, and intumescent paint. Intumescent paint is a proprietary latex coating designed to delay the ignition of foam insulation in a fire.

3.6.1 Insulation Durability

Moisture is the most common and severe durability problem in insulated building assemblies. Moisture fosters rot by insects and microbes. Entrained moisture reduces the thermal resis-

tance of many insulation materials. Moisture affects the chemistry of some building materials: metals for example.

Moisture prevention includes denying moisture access to building cavities, allowing condensed water to drain out, and allowing moisture to dry to the indoors, outdoors, or both.

Retrofitting insulation can affect the preventive measures listed here. Consider the function and relevance of these building components whenever you install insulation.

- **Air barrier:** Air can carry moisture into building cavities from indoors or outdoors where the moisture can condense and dampen insulation and other building materials. Air leakage is an energy problem too. The air barrier is any continuous material or building assembly that provides acceptable resistance to air leakage.
- **Vapor retarder:** Vapor diffusion can carry large amounts of water vapor into building cavities where it can condense and dampen insulation and other building materials. Vapor retarders resist water vapor diffusion from indoors into cavities where condensation can dampen insulation and other building materials.
- **Ground-moisture barrier:** The ground under a building is the most potent source of moisture in many buildings, especially those built on crawl spaces. Most crawl spaces require ground-moisture barriers to prevent the ground from being a major cause of moisture problems.
- **Water resistive barrier (WRB):** Asphalt paper or house wrap, under siding and roofing, serves as the home's last defense to wind-driven rain, which can dampen sheathing and other building materials. This water resistive barrier must be protected during insulation and incorporated into window openings during window replacement.
- **Vapor permeable materials:** Most common building materials are permeable to water vapor, which allows the water vapor to follow a gradient from wet to dry. This pro-

cess allows building assembles to dry out to both indoors and outdoors. Vapor permeable materials are essential for fail-safe building assemblies in most climates.

- **Flashings:** Seams and penetrations in building assemblies are protected by flashings, which prevent water from entering these vulnerable areas.
- **Drainage features:** Intentional or unintentional drainage features of buildings allow water to drain out of cavities. Examples: Masonry veneers have intentional drainage planes and weep openings near their bottoms. Cathedral ceilings drain water out through their soffit vents unintentionally.
- **Water storage:** Masonry veneers and structural masonry walls have the ability to store rainwater and dry out during dry weather.
- **Ventilation:** Roofs, attics, crawl spaces and even some walls have ventilation features that dry out wet building assemblies.
- **Termiticide:** When foam insulation is installed below grade in regions with termites, apply a termiticide to the soil in amounts determined by the labeling of the termiticide.

Consult with experts when necessary to preserve, protect, or install these moisture-prevention features, according to local climate and established best practices.

3.7 SWS Alignment

Field Guide Topic	SWS Detail
Air Sealing Safety Pg. 86	2.0103.1 Air Sealing Worker Safety

Field Guide Topic	SWS Detail
Air Sealing and Fire Containment Pg. 87	4.1001.5 Dense Pack Preparation 3.1001.1 Penetrations and Chases, 3.1001.2 Chase Capping, 3.1001.3 Walls open to Attic—Balloon Framing and Double Walls
Insulation Building Science Pg. 95	4.1001.6 Unvented Roof Deck—Preparation for Spray Polyurethane Foam, 4.1001.7 Vented Roof Deck—Preparation for SPF
Insulation Material Characteristics Pg. 96	4.1003.7 Ignition and Thermal Barriers—Spray Polyurethane Foam
Fibrous Insulation Materials Pg. 97	
Operating the Insulation Blowing Machines Pg. 101	4.1001.5 Dense Pack Preparation
Spray Foam Insulation Materials Pg. 102	4.1001.6 Unvented Roof Deck—Preparation for Spray Polyurethane Foam, 4.1001.7 Vented Roof Deck—Preparation for SPF 2.0100.3 Global Worker Safety
Fire Protection for Foam Insulation Pg. 104	4.1003.7 Ignition and Thermal Barriers—Spray Polyurethane Foam
Foam Board Insulation Pg. 104	
Insulation Safety and Durability Pg. 107	
Insulation Durability Pg. 107	
Air Sealing Materials Pg. 88	

Field Guide Topic	SWS Detail
Air Barrier Materials Pg. 89	
Stuffing Materials Pg. 90	
Caulking and Adhesives Pg. 91	
Liquid Foam Air Sealant Pg. 93	

CHAPTER 4: ATTICS AND ROOFS

This chapter discusses air sealing and insulating attics and roofs. Whether the thermal boundary is at the attic floor or the roof, the air barrier and the insulation should be adjacent to one another and continuous at that location.

4.1 AIR-SEALING ATTICS AND ROOFS

Air sealing attics and roofs may be the most important and cost effective weatherization measure and one of the most challenging. The attic or roof is a prominent location for air-leakage and moisture damage. Building fires tend to spread through large air leaks in the attic. Air-sealing can prevent these problems.

4.1.1 Sealing around Manufactured Chimneys

SWS Detail: 3.1001.1 Penetrations and Chases

Several types of manufactured chimneys are common in residential buildings. We explain these in *"Manufactured Chimneys" on page 286*. Observe the required clearances listed in *"Clearances to Combustibles for Common Chimneys" on page 286*. Install the chimney's air seal with an insulation shield if you'll retrofit insulation after air sealing.

- ✓ Remove the insulation from around the manufactured chimney.
- ✓ Cut light gauge aluminum or galvanized steel in two pieces with half-circle holes for the chimney that create small caulk-able cracks.
- ✓ Bed the metal in sealant and staple, nail, or screw the metal in place.
- ✓ Caulk around the junction of the chimney and the metal air seal with non-combustible caulk.

- ✓ Cut and assemble a metal insulation shield that creates a 3-inch space between the shield and chimney and extends above the planned level of the retrofit insulation.
- ✓ Move the existing insulation that you removed back into place around the insulation shield before installing the retrofit insulation.

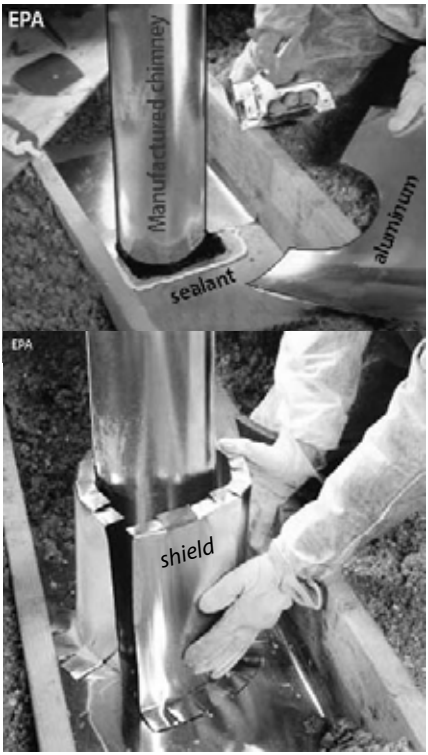

Sealing manufactured chimneys: When installing retrofit insulation in addition to air sealing, install a shield on top of the air seal that extends above the level of the new insulation.

4.1.2 Sealing around Fireplaces and Chimneys

SWS Detail: 3.1001.1 Penetrations and Chases

Leaks around fireplace chimneys are often severe air leaks. Use this procedure to seal air leaks through the chimney chase.

- ✓ Cut sheet metal to fit the gap that borders the chimney with overlaps connecting to nearby attic framing lumber.

- ✓ Bed the sheet metal air seal in sealant, and then fasten the sheet metal to the attic framing with staples, nails, or screws.
- ✓ Seal the metal patch to chimney or flue with a non-combustible sealant labeled ASTM E136.
- ✓ Seal other gaps between the attic and the chimney chase.
- ✓ For large chimney chases, cover the chase opening with structural material such as plywood. Maintain clearances between the structural seal and the metal or masonry chimney as listed in *"Clearances to Combustibles for Common Chimneys" on page 286*.

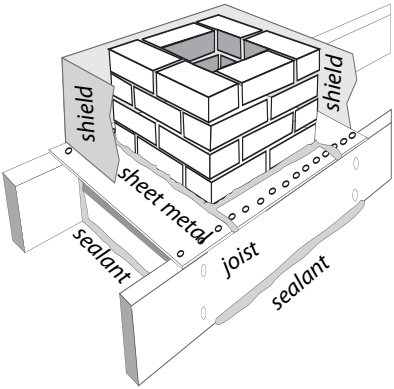

Sealing around chimneys: Chimneys require both an air seal and a shield if retrofit insulation is installed with air sealing.

4.1.3 Air Sealing Recessed Lights

SWS Details: 3.1003.5 Dropped Ceiling with Light Boxes and Fixtures, 3.1003.6 Dropped Soffits, 4.1001.1 Non-Insulation Contact (IC) Recessed Light

The most common type of recessed light fixture is the round can. However all recessed light fixtures are potential air leaks and air-leakage conduits. Many recessed light fixtures have safety switches that turn them off at around 150° F. Too much insulation covering the fixture or foam insulation could cause the safety switch to cycle.

There are three kinds of recessed can lights found in buildings. (IC means insulation contact. AT means airtight.)

1. Older cans that aren't rated for contact with insulation, known as non-IC-rated cans.
2. IC-rated cans that may be covered with fibrous insulation but not foam insulation.
3. ICAT-rated cans that are airtight in addition to being rated for insulation contact.

Consider the following options for reducing air leakage through recessed can lights.

- Build a drywall box over the fixture leaving at least 3 inches clearance from insulation on all sides and to the lid of the enclosure. Seal the airtight box to surrounding materials with foam to form an airtight assembly.
- Install an airtight trim assembly in the existing can that will greatly reduce the can's air leakage. Install a compact fluorescent or LED light as a replacement for the hot inefficient incandescent bulb.
- Install an airtight LED-retrofit assembly in the existing can. This option assures that the light is energy-efficient and low heat because you can replace an incandescent bulb with an LED.
- Replace the recessed fixture with a new one, designed to be airtight and carefully seal around the airtight fixture.

Recessed light fixtures should contain 60-watt bulbs or less. Compact fluorescent lamps (CFLs) or LED lamps are preferred for recessed light fixtures because CFLs and LEDs operate cooler than incandescent lamps.

Caution: Don't cover IC-rated or airtight IC-rated fixtures with spray foam insulation. The foam's high R-value and continuous contact could overheat the fixture.

See also "Safety Preparations for Attic Insulation" on page 127.

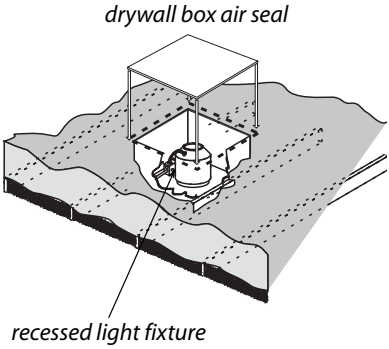

Air seal and shield for non-IC can: This drywall box is an insulation shield and air seal, but allows the fixture some air circulation for cooling.

Low-air-leakage trim retrofit: These kits employ a standard Edison base. Install a CFL or an LED in the base for maximum energy savings.

Airtight LED retrofit for can lights: These retrofit fixtures provide a low-wattage LED with a low-air-leakage enclosure that inserts into the existing can light.

4.1.4 Sealing Stairways to Unconditioned Attics

SWS Details: 3.1002.1 Interior with Sloped Ceiling, 3.1002.2 Stairwell to Attic—Door at Bottom with No Ceiling Above, 3.1002.3 Stairwell to Attic—Door at Top with Finished Ceiling Above

There are a variety of stairways and hatchways that provide access from the building to an unconditioned attic.

The following components of these stairways may need air sealing and insulation depending on whether they are at the thermal boundary.

- The risers and treads of the stairways
- The surrounding triangular walls
- Vertical or horizontal doors or hatches
- The framing and sheeting surrounding the doors or hatches
- Sloping ceilings above the stairways

Consider the following air-sealing measures.

- ✓ Study the geometry of the stairway and decide where to establish the air barrier and install the insulation.
- ✓ Weatherstrip around doors and hatches if the door or hatch is at the thermal boundary.
- ✓ Seal the walls, stair-stringer space, and ceiling if they are at the thermal boundary.
- ✓ Seal gaps between the door frame and the framing with one-part foam, two-part foam, or caulking.
- ✓ If attic insulation is or will be above the level of the attic-access hole, build a dam that extends above the top of the floor joists around attic access hatch. Make the dam strong enough to support the weight of anyone entering the attic.

Air seal this dam to the surrounding structure of the attic access hatch.

✓ With existing insulation dams, clear existing fibrous insulation from around dam around the hatch framing. Spray two-part foam around the perimeter to reduce heat loss through the hatch framing.

See also "Walk-Up Stairways and Doors" on page 147.

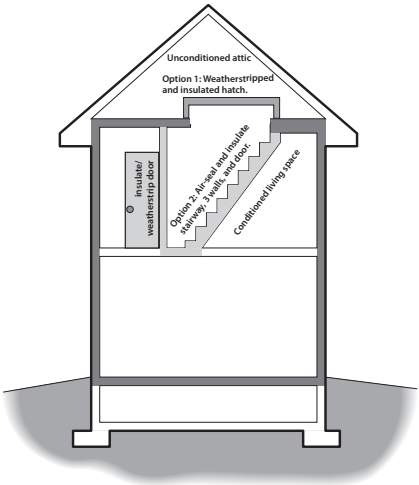

Stairways at the thermal boundary: The stairway may be within the thermal boundary or outside it. Only walls, ceilings, doors, and hatches at the thermal boundary require thorough air sealing. The door as shown is open.

4.1.5 Sealing Porch Roof Structures

Porch roofs on older homes were often built at the framing stage or before the water resistive barrier (WRB) and siding were installed. The porch's roof sheathing, roofing, and tongue-and-groove ceiling aren't air barriers. The loosely fitting wall sheathing or unsheathed wall allows air into the wall cavities where it migrates into the conditioned space or convects heat into or out of the building.

Consider these options for air sealing leakage through a porch roof.

- Remove part of the porch ceiling and install a rigid air barrier or cover the area with closed-cell spray foam.

- Dense-pack the porch-roof cavity to reduce the airflow through the porch roof and wall cavities.

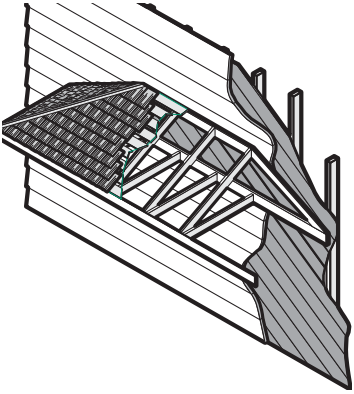

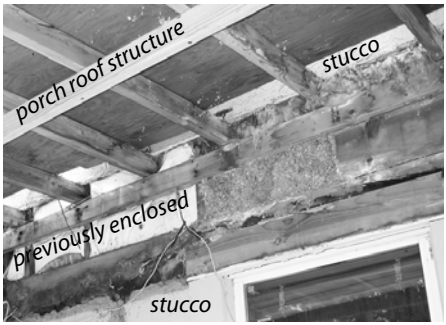

Porch air leakage: Porch roof cavities often allow substantial air leakage because of numerous joints, and because there may be no siding or sheathing installed in the wall behind the roof and ceiling.

4.1.6 Removing Insulation for Attic Air Sealing

Attic air sealing is essential for successful air sealing jobs. Removing insulation from an attic for the purpose of air sealing may be worth the cost and effort. Batts and blankets can be rolled up, moved out of the way, and re-used. Loose fill insulation can be vacuumed with commercial vacuum machines available from the same suppliers that sell insulation-blowing machines. Many insulation companies own large vacuums for loose-fill insulation.

Removing attic insulation: Technicians vacuum and collect existing attic insulation for re-use or disposal because of moisture damage or to allow effective air sealing.

4.1.7 Sealing Joist Cavities Under Knee Walls

SWS Detail: 4.1004.1 Preparation for Dense Packing, 4.1004.2 Preparation for Batt Insulation

Floor joist cavities beneath knee walls allow air from a ventilated attic space to enter the floor cavity between stories. This is a problem of homes with a finished attic, also known as story-and-a-half homes.

Connect the knee wall with the ceiling of the space below by creating a rigid seal under the knee wall. Use a combination of rigid foam with one-part or two-part foam sealing the perimeter. Or, use fiberglass batt with spray two-part foam as a strong airtight seal covering over the fiberglass batt.

4.1.8 Sealing Kitchen or Bathroom Interior Soffits

SWS Detail: 3.1001.1 Penetrations and Chases, 3.1001.2 Chase Capping, 3.1003.6 Dropped Soffits

Many modern homes have soffits above kitchen cabinets and in bathrooms. Large rectangular passages link the attic with the soffit cavity. At best, the air convects heat into or out of the con-

ditioned space. At worst, attic air infiltrates the conditioned space through openings in the soffit or associated framing.

- ✓ Seal the soffit with plywood or drywall, bedded in sealant and fastened to ceiling joists and soffit framing with screws, nails or staples.
- ✓ Seal the patch's perimeter thoroughly with two-part foam or caulking.

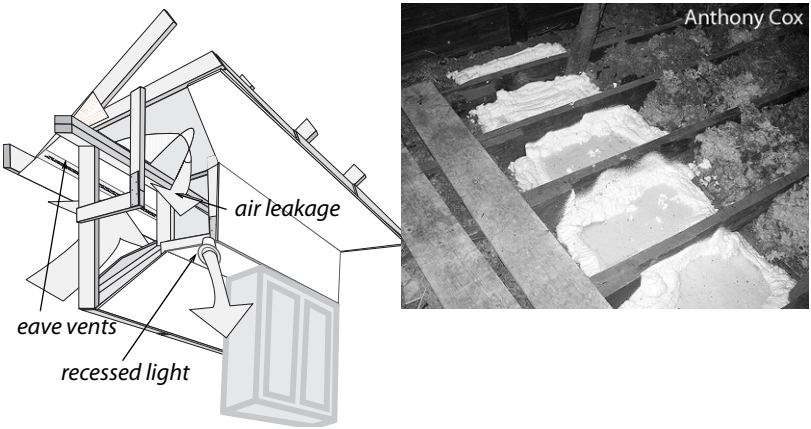

Kitchen soffits: The ventilated attic is connected to the soffit and the wall cavity through framing flaws. Any hole in the soffit creates a direct connection between the kitchen and attic. The photo shows a soffit sealed from the attic with foam board reinforced with two-part spray foam.

4.1.9 Sealing Two-Level Attics

SWS Detail: 3.1001.3 Walls Open to Attic—Balloon Framing and Double Walls

Split-level and tri-level homes have a particular air leakage problem related to the walls and stairways dividing the homes' levels.

- ✓ Seal wall cavities below the ceiling joists from the attic with a rigid material fastened to studs and wall material.

- ✓ Or insert folded fiberglass batt into the wall cavity and spray with at least one inch of two-part foam to create a rigid air seal.
- ✓ Dense-pack the transitional wall or insulate it with fiberglass batts. Either way install an air barrier on the attic side of the wall.
- ✓ Seal all penetrations between both attics and conditioned areas.

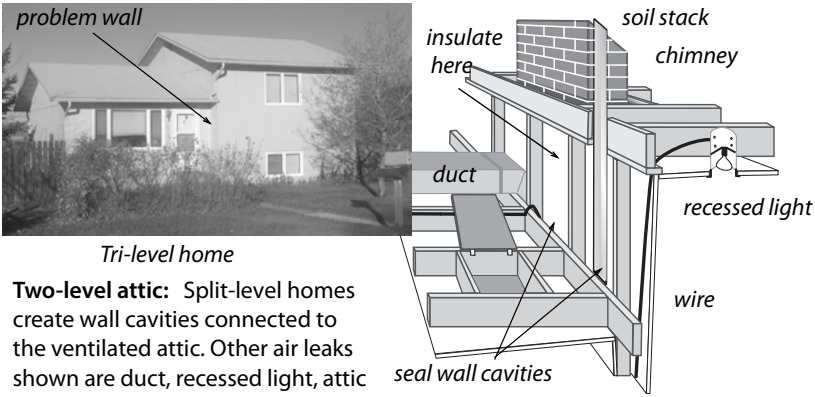

Tri-level home

Two-level attic: Split-level homes create wall cavities connected to the ventilated attic. Other air leaks shown are duct, recessed light, attic hatch and chimney.

4.1.10 Sealing Suspended Ceilings

SWS Detail: 3.1003.1 New Ceiling Below Original—Old Ceiling Intact or Repairable, 3.1003.2 Ceiling Leaks Not Repairable—No Air Barrier Above, 3.1003.4 3-D Walls, 3.1003.3 Above Closets and Tubs, 3.1003.5 Dropped Ceiling with Light Boxes and Fixtures

Suspended ceilings are seldom airtight, especially the T-bar variety. T-bar ceilings and other non-structural suspended ceilings may not be a practical location to establish an air barrier.

- The ceiling was installed room by room.

- The amount of spray foam necessary to seal the joints may be too heavy for the non-structural suspended ceiling to support.
- Technicians may need access to the crawl space above the suspended ceiling in multiple locations to work on utilities installed above the ceiling.

Take down some panels of a suspended ceiling to inspect the suspended ceiling or gain access from above. Observe these options for air-sealing non-structural suspended ceilings.

- A plaster ceiling above a non-structural suspended ceiling is weak and failing. You plan to install insulation on top of existing insulation above the failing ceiling. Reinforce the existing plaster with screws and plaster washers. Screw drywall over areas of missing plaster. Seal the joints and perimeter with spray foam.
- An insulated roof deck above a non-structural suspended ceiling may be the only practical place to establish an air barrier. The perimeter walls and the wall-roof junction may be leaky and uninsulated. Insulate and air seal the perimeter walls above the suspended ceiling if necessary to complete the insulation and air barrier at the thermal boundary.

Ceilings suspended using lumber or steel studs, on the other hand, may be structural enough to walk on.

- The suspended ceiling is strong enough to walk on its structure. Seal the ceiling joints, penetrations, and perimeter with spray foam. Insulate the walls between the suspended ceiling and upper ceiling. Either insulate above the suspended ceiling or above the upper ceiling.

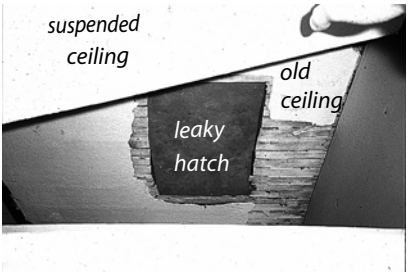

Sealing existing upper ceilings: With a non-structural suspended ceiling and a damaged plaster ceiling above, seal the plaster ceiling above if it's impractical to air seal the suspended ceiling.

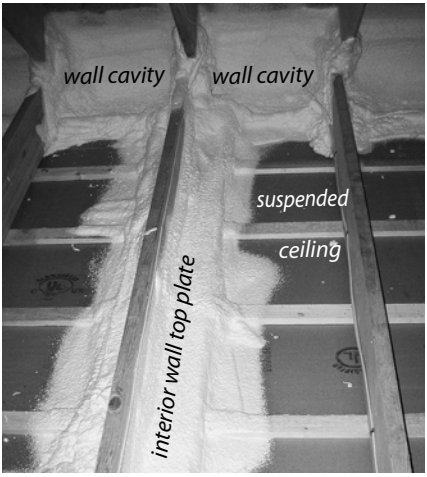

Sealing structural suspended ceilings: Two-part foam air seals and insulates an interior wall top plate and the wall cavity between the ceiling and roof deck.

4.2 Insulating Attics and Roofs

Attic and roof insulation are two of the most cost-effective energy conservation measures.

Buildings with flat ceilings are usually insulated at the ceiling and this is attic insulation. An attic is a space under a roof where a person can walk or crawl.

Buildings with sloping ceilings or flat roofs are usually insulated in the roof cavity. Roof cavities are spaces that aren't usually accessible for walking or crawling.

A majority of buildings have fibrous insulation in their attics or roof cavities. Fibrous insulation is the most economical insulation for attics and roof cavities. Attics and roof cavities need

ventilation for drying, cooling, and to prevent ice dams. *See "Fibrous Insulation Materials" on page 97.*

4.2.1 Preparing for Attic Insulation

SWS Detail: Subtopic 4.1001 General Preparation, 4.1001.4 Vented Eave or Soffit Baffles, 4.1001.1 Non-Insulation Contact (IC) Recessed Lights

These preparatory steps before insulating the attic.

- ✓ Before insulating the attic, seal air leaks and bypasses as described previously. *See "Air-Sealing Attics and Roofs" on page 113.* Verify attic air-tightness as described in *"Simple Zone Pressure Testing" on page 467*.
- ✓ Repair roof leaks, remove other moisture sources, and repair other attic-related moisture problems before insulating attic. Don't do any retrofit work in the attic until all attic moisture problems have been repaired.
- ✓ Vent all kitchen and bath fans outdoors through appropriate roof fittings, side wall fittings, or soffit fittings. *See "Fan and Duct Specifications" on page 361.*
- ✓ Install an attic access hatch if none is present.
- ✓ An interior attic hatch should be at least 22 inches square if possible. Insulate the hatch to a level equivalent to the insulation on the surrounding surfaces or to the maximum practical R-value. The roof's height above the hatch may limit rigid board foam you can attach to the back of the hatch door.
- ✓ Prepare documentation of the insulation type, installed thickness, coverage area, and insulation R-value to post in the attic after installation.

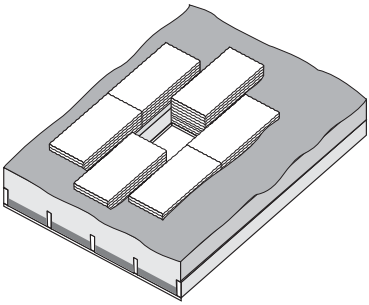

Batts form attic-insulation dam: Where head space is limited, fiberglass batts are a good choice for a low-profile insulation dam.

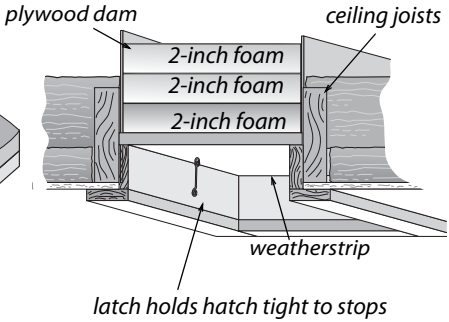

Insulated attic hatch: Building a dam prevents loose-fill insulation from falling down the hatchway. Foam insulation prevents the access hatch from being a thermal weakness. Install foam to achieve attic-insulation R-value of R-38. Foam can be glued together in layers.

- ✓ Build an insulation dam around the attic access hatch two inches above the height of the insulation. Build the dam with rigid materials like plywood or oriented-strand board so that the dam supports the weight of a person entering or leaving the attic.
- ✓ If head space is severely limited at the hatch, and there is insufficient space to build a wood framed or equivalent baffle, use fiberglass batts to dam loose fill insulation.

4.2.2 Safety Preparations for Attic Insulation

SWS Detail: 4.1001.1 Non-Insulation Contact (IC) Recessed Light, 4.1006.3 Whole-House Fan, 4.1005.2 Accessible Floors—Loose Fill Installation, 4.1005.3 Accessible Floors—Batt Insulation Over Existing Insulation, 4.1005.4 Accessible Floors—Loose Fill Over Existing Insulation, 4.1001.2 Knob and Tube Wiring

Before insulating the attic, protect the heat-producing fixtures, such as recessed light fixtures and chimneys, by installing shields. Without shields, the light fixture or chimney might

ignite the insulation. Or, the insulation might cause a light fixture or chimney to become hot enough to ignite something else.

The shielding enclosure must often serve as the air-seal for the chimney or light fixture.

Protecting Recessed Light Fixtures

There are three different types of recessed light fixtures and light-fan fixtures. (IC = insulation contact)

1. Non-IC-rated fixtures that must not touch insulation.
2. Type IC-rated fixtures that may be covered with fibrous insulation.
3. Type IC-AT, which are reasonably airtight (AT) and safe for contact by fibrous insulation.

Consider these options when preparing recessed light fixtures for attic insulation.

- Remove the recessed light fixture and replace it with a surface-mount fixture.
- Replace non-IC-rated fixtures with airtight IC-rated fixtures (IC-AT). You can cover these IC-AT fixtures with fibrous insulation after sealing the gap between the fixture and the surrounding materials.
- If the existing fixture is rated IC, you can seal the fixture's enclosure to the ceiling with caulk and cover the fixture with fibrous insulation. Or you can shield the fixture with an enclosure, seal the enclosure to the ceiling with foam, and then cover the enclosure with insulation.
- Shield all existing non-IC-rated fixtures with airtight enclosures that extend above the level of the retrofitted insulation. Seal the enclosure to the ceiling with foam, and then surround the enclosure with insulation, but don't insulate over its top.

- In cavities that are sheeted on both sides, either shield non-IC recessed lights or replace them before dense-pacing the cavities.
- Spray foam insulation must not contact or surround recessed light fixtures or any other heat-producing devices.

If an existing older recessed fixture, which aren't labeled IC must remain in place, do these steps.

- ✓ Install non-insulating enclosures around these heat-producing recessed lights and fan-light fixtures.
- ✓ Maintain 3 inches of clearance between the insulation shield and the fixture on the sides and top.

Recessed light fixtures: Cover recessed light fixtures with fire-resistant drywall or sheet-metal enclosures to reduce air leakage to allow installers to safely insulate around the box.

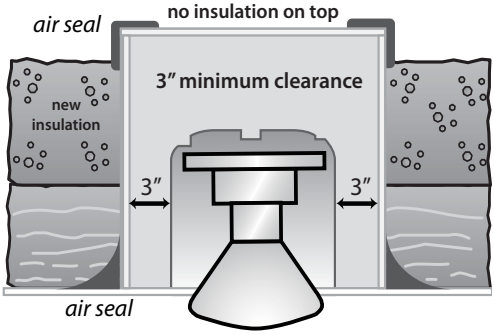

- ✓ Build the insulation shield to extend 4 inches above the finished attic insulation.
- ✓ Fasten the shields securely to the ceiling so they don't move or collapse.
- ✓ Notch the shields around wires.
- ✓ Seal the shield's enclosure to the ceiling with foam or caulk.

Protecting Chimneys

The requirements for protecting chimneys from contact with insulation vary widely from one building department to another. We know of three common approaches to insulating

around chimneys, which are listed here beginning with the most restrictive.

1. Air-seal around the chimney using non-combustible material like 26 gauge galvanized steel. Seal the steel to the chimney with a high-temperature sealant that meets **ASTM E136**.
2. After air sealing gaps, install non-combustible insulation shields around masonry chimneys and manufactured metal chimneys to keep insulation at least 3 inches away from these chimneys.
3. A clearance smaller than 3 inches may be allowed if the attic insulation is non-combustible or if the specifications of the vent material allow a clearance less than 3 inches. For example: type B gas vent has a typical minimum clearance of 1 inch and all-fuel chimneys have a typical minimum clearance of 2 inches.
4. If the insulation is non-combustible, such as blown fiberglass or rock wool, no clearance between insulation and manufactured or masonry chimneys is necessary if this option is permitted by local building officials.

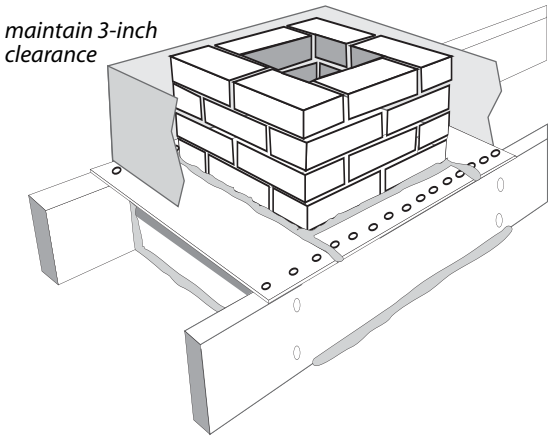

Air-sealed chimney with metal shield: Metal flashing bridges the gap between the chimney and the framing. A metal shield keeps the insulation 3 inches away from the chimney.

Electrical Junction Boxes

Observe these specifications during attic-insulation preparation.

1. Install covers on all electrical junction boxes that lack covers.
2. Use caulk or two-part foam to air seal electrical boxes that penetrate the ceiling (for light fixtures and fans), before blowing fibrous insulation over the boxes.
3. Flag the electrical boxes so that an electrician can find the boxes for future electrical work.

Knob-and-Tube Wiring

If knob-and-tube wiring is present in the attic, consider decommissioning it prior to installing insulation. *See "Decommissioning Knob-and-Tube Wiring" on page 44.*

4.2.3 Blowing Attic Insulation

SWS Detail: 4.1005.2 Accessible Floors—Loose Fill Installation, 4.1005.4 Accessible Floors—Loose Fill Over Existing Insulation, 4.1005.8 Loose Fill Over Existing Insulation on Accessible Attic Floors

Install attic insulation to a cost-effective R-value, depending upon existing insulation level and climatic region. Air seal attics before installing attic insulation. Air sealing may require removing existing insulation and debris that obstruct air sealing. *See "Removing Insulation for Attic Air Sealing" on page 120.*

Blown insulation is usually better than batt insulation because blown insulation forms a seamless blanket. Blown fibrous attic insulation settles: cellulose settles 10% to 20% and fiberglass settles 3% to 10%. Blowing attic insulation at the highest achievable density helps minimize both settling and air circulation within the blown insulation.

Observe these specifications when blowing loose-fill attic insulation.

- ✓ Calculate how many bags of insulation are needed to achieve the R-value specified on the work order from the table on the bag's label.
- ✓ Install insulation depth rulers: one for every 300 square feet.
- ✓ Maintain a high density by moving as much insulation as possible through the hose with the available air pressure. The more the insulation is packed together in the blowing hose, the greater is the insulation's installed density.
- ✓ Fill the edges of the attic first, near the eaves or gable end, then fill the center.
- ✓ When filling a tight eaves space, push the hose out to the edge of the ceiling. Allow the insulation to fill and pack against the baffle.
- ✓ Install insulation to a consistent depth. Level the insulation with a stick if necessary.
- ✓ Post an insulation certificate, with insulation type, installed thickness, coverage area, and insulation R-value at the attic entrance and/or adjacent to the electrical panel.

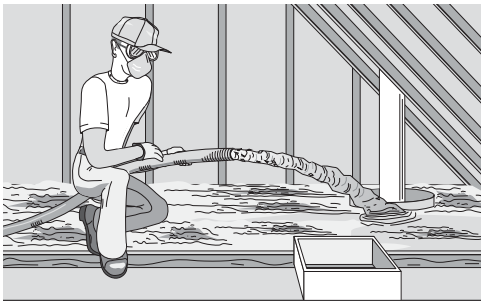

Blown-in attic insulation: Blown insulation is more continuous than batts and produces better coverage. Insulation should be blown at a high density to minimize settling and air convection.

4.2.4 Closed-Cavity Attic Floors

SWS Detail: 4.1003.4 Cape Cod Side Attic Roof—Dense Pack Installation, 4.1005.6 Enclosed Attic Storage Platform Floor-Dense Pack Installation

The ceiling joists in the attic are often covered by a wood floor for storage. You may have to remove some floor boards or drill the floor sheathing to install dense-packed insulation.

Finished attic floor: Find the large air leaks underneath the flooring and seal them before insulating the space between the joists.

- ✓ Inspect and thoroughly seal the floor cavity's air leaks before blowing insulation.
- ✓ Protect recessed light fixtures and other heat-producing devices in the floor cavity.
- ✓ Then dense-pack fiberglass or cellulose insulation into the spaces between the ceiling joists.

4.2.5 Insulating Closed Roof Cavities

SWS Detail: 4.1002.1 Above Deck Roof Insulation—Preparation, 4.1002.2 Above Deck Roof Insulation—Installation, 4.1001.5 Dense Pack Preparation, 4.1003.1 Pitched/Vaulted/Cathedralized Ceilings—Loose Fill Over, 4.1003.2 Pitched/Vaulted/ Cathedralized Ceilings—Dense Pack Over, 4.1003.3 Unvented Flat Roof with Existing InsulationSWS Detail: 4.1003.5 Unvented Roof Deck—Spray Polyurethane Foam Installation

Many homes have cathedral ceilings or flat roofs that are only partially filled with insulation. The IRC 2012 building code requires one of these two approaches to insulate a roof cavity.

1. A ventilated space of at least one inch between the roof insulation and the roof sheathing.
2. Foam roof insulation in addition to the cavity insulation of between R-5 and R-35 depending on climate.

Many cathedral roof cavities have been dense-packed with fiberglass insulation without ventilation or foam roof insulation. Some experts believe that this is an effective solution. However, this solution usually requires engineered plans approved by the building department when a building permit is required.

Ventilated Closed Roof Cavities

Inspect the roof cavities for baffles that will maintain a one-inch air space between the new insulation and the roof deck.To prepare for roof-cavity insulation, without existing baffles and with a ventilated space above the insulation, use this procedure.

- ✓ Remove either the roofing and sheathing or the interior ceiling to gain full access to the cavity.
- ✓ Remove recessed light fixtures and replace them with surface-mounted light fixtures. Carefully patch and air seal the openings.

- ✓ Install fiberglass or foam insulation to meet the IECC 2012 regional minimum roof-assembly R-value requirements.
- ✓ Install openings into the ventilation channel above the insulation totaling $^{1}/_{150}$ of the roof area. If the ceiling has a vapor barrier the requirement is reduced to $^{1}/_{300}$ of the roof area.
- ✓ In cold climates, install a vapor barrier at the ceiling. At minimum paint an oil-based primer over the interior drywall or plaster.
- ✓ Repair roof leaks or install a new water-tight roof. Replace moisture-damaged sheathing as part of the roof replacement.
- ✓ Install an air-barrier ceiling (drywall) if the existing ceiling isn't an adequate air barrier, for example tongue-and-groove paneling.
- ✓ Seal other air leaks with great care, especially at the perimeter and around ridge beams.
- ✓ When replacing the roof, consider installing 1-to-8 inches of rigid high-density foam insulation on top of the roof deck. If you choose this option, dense-pack the existing roof cavity first.

Un-Ventilated Closed Roof Cavities: Preparation

Many homes have cathedral ceilings, vaulted ceilings, or flat roofs that are partially filled with insulation and would require removing the roof or the ceiling in order to install baffles for ventilation.

To prepare for dense-packing the roof-cavity, consider the following steps.

- ✓ Reduce or eliminate sources of moisture in the home. *See "Solutions for Moisture Problems" on page 31.*

- ✓ Verify that the ceiling has a vapor retarder and air barrier on the interior. If not, install a vapor retarder and air barrier.
- ✓ Remove recessed light fixtures and replace them with IC-AT fixtures or surface-mounted fixtures. Carefully patch and air seal the openings if you replace the recessed fixtures with surface-mounted ones.
- ✓ Seal other ceiling air leaks, large and small, with great care.
- ✓ When replacing the roof during roof-cavity insulation, consider installing 1-to-8 inches of rigid high-density foam insulation on top of the roof deck. If you replace the roof, dense-pack the existing roof cavity first.
- ✓ Don't insulate the roof deck without first filling the closed roof cavity beneath the roof because air convection inside the roof cavity reduces the roof assembly's thermal resistance.

Important Note: Whether roof cavities can be safely dense-packed with fiberglass insulation and without ventilation is controversial and depends on climate. The colder the climate, the higher the risk of problems. Dense-packing the cavities prevents most convection and moist-air infiltration, which are leading causes of moisture problems in roof cavities. Consult a knowledgeable local engineer before deciding to dense-pack a roof cavity with fiberglass. Don't insulate roof cavities with cellulose because of its moisture absorption and its susceptibility to moisture damage.

Blowing Insulation into the Closed Roof Cavity

Always use a fill tube when blowing closed roof cavities. Insert the tube into the cavity to within a foot of the end of the cavity. Access the cavity through the eaves, the roof ridge, the roof deck, or the ceiling. Consider one of these procedures.

- Drilling holes in the roof deck after removing shingles or ridge roofing.

- Removing soffit and blowing insulation from the eaves.
- Drilling and blowing through a drywall ceiling.
- Carefully removing a tongue-and-groove plank and blowing insulation into cavities through this slot.

Blowing from the eaves: Some vaulted ceilings can be blown from the eaves and/or the ridge.

Blowing from the roof deck: Technicians remove a row of shingles, drill, and blow fiberglass into this vaulted roof cavity.

4.2.6 Exterior Rooftop Foam Insulation

Only install rooftop foam insulation over dense-packed roof cavities. A ventilation space between existing insulation and the new rooftop insulation reduces the foam's R-value. Roofers use this method mainly when re-roofing low-sloping roofs.

- ✓ Use high density foam board: 2 pcf for polystyrene or 3 pcf for polyisocyanurate if the roof is flat or low sloping.
- ✓ Flash all external penetrations according to the roofing manufacturer's specifications.
- ✓ Use a cool roofing material such as white rubber or white metal to limit the foam's temperature during intense summer sunshine and to minimize cooling costs.

- ✓ Contact a design professional to make sure the roof will drain properly after foam installation.

Many foam manufacturers can taper expanded polystyrene foam, providing wedge-shaped pieces to create slope for drainage. *See "Expanded Polystyrene (EPS) Foam Board" on page 105. See "Polyisocyanurate (PIC) Foam Board" on page 106.*

4.2.7 Installing Fiberglass Batts in Attics

SWS Detail: 4.1005.3 Accessible Floors—Batt Insulation Over Existing Insulation

Follow these specifications when installing fiberglass batts in an attic. Fiberglass batts aren't the best insulation for attics because of all their seams.

- ✓ When layering batts, install new layers at right angles to underlying layers if the top of the existing batts are level with or above the ceiling joist or truss bottom chord.
- ✓ Install un-faced fiberglass insulation whenever possible.
- ✓ If you must install faced batts, install them with the facing toward the heated space. Never install faced insulation over existing insulation.
- ✓ Cut batts carefully to ensure a tight fit against the ceiling joists and other framing.

4.2.8 Cathedralized Attics (Open Cavity)

SWS Details: 4.1003.2 Pitched/Vaulted/Cathedralized Ceilings—Dense Pack Over, 4.1003.5 Unvented Roof Deck—Spray Polyurethane Foam Installation, 4.1001.7 Vented Roof Deck—Preparation for SPF, 4.1003.7 Ignition and Thermal Barriers—Spray Polyurethane Foam

A cathedralized attic has insulation attached to the bottom of the roof deck and is also called a hot roof. Choose to insulate the

bottom of the roof deck instead of insulating the ceiling when the building owner wants to use the attic or to enclose an attic air handler and leaky ducts within the home's thermal boundary.

Important: Insulating the roof deck presents a risk of moisture problems from roof leaks or condensation. To avoid moisture condensation within the insulation or at the bottom of the roof deck during cold weather, use air-impermeable insulation such as closed-cell foam or install an air barrier and vapor retarder to the rafters.

Spray Foam Roof-Deck Insulation

Use these procedures for spraying high-density, closed-cell foam on the underside of the roof deck.

- ✓ Remove any vapor retarder in the ceiling insulation at the floor of the attic.
- ✓ Create an airtight insulation dam at the eaves to form an air barrier at the roof-wall junction and to prevent spray foam from escaping into the soffit.
- ✓ Spray
- ✓ Comply with fire safety provisions of the IRC as discussed in *"Closed-Cell Spray Polyurethane Foam" on page 102*.

Use **only** high-density closed-cell spray foam and not low-density open-cell spray foam for application to the bottom of a roof deck.

Fiberglass Roof-Deck Insulation

Insulating the rafter space with an air-permeable insulation requires an air barrier, vapor retarder, and Class I (or A) fire-rated material at the roof cavity's lower boundary. Consider these two alternatives.

1. Install the rafter's depth of fiberglass batts and then a material or combination of materials that constitutes an air barrier, vapor retarder, and Class I fire barrier.
2. Blow dense-packed fiberglass insulation between the roof deck using a rigid sheeting or flexible insulation restraint. Dense-pack the fiberglass at a minimum of 2.0 pcf.

Insulated gable

Unventilated attic: The unventilated attic or cathedralized attic is a last resort when an air handler and leaky ducts are in the attic.

4.2.9 Vaulted Attics

SWS Detail: 4.1003.1 Pitched/Vaulted/Cathedralized Ceilings—Loose Fill Over

A vaulted attic is framed with a special truss that creates a sloping roof and a sloping ceiling. Access to the cavity varies from difficult to impossible. Install insulation from either the top of the roof deck or through the ceiling. Insulation, installed at the ceiling, must have some stability to prevent gravity from pulling it downhill or wind from piling it, leaving some areas under-insulated. Consider the following options to insulating uninsulated or partially insulated vaulted attics.

1. Insulate the ceiling with fiberglass batts. Install the batts parallel to the framing if the top of existing insulation is below the framing. Install the batts perpendicular to the framing if the top of the existing insulation is above the framing.
2. Insulate the bottom of the roof deck, as described previously for a cathedralized attic, if you remove the ceiling.

3. Insulate the ceiling with sprayed foam, damp-spray fibrous insulation, or batts from the roof with the roof sheathing removed.
4. Fill the cavity to approximately 100% with loosely blown fiberglass from indoors or through the roof.
5. Preserve or install openings into the ventilation space above the insulation totaling $^{1}/_{150}$ of the roof area. If the ceiling has a vapor retarder the requirement is $^{1}/_{300}$ of the roof area.

4.2.10 Finished Knee Wall Attics

SWS Detail: 4.1004.1 Preparation for Dense Packing, 4.1005.1 Accessible Floors—Batt Installation

Finished attics require special care when installing insulation. They often include five separate sections that require different air-sealing and insulating methods. Seal air leaks in all these assemblies before insulating them. If necessary, remove the planking and insulation from the side-attic floor to expose the air leaks.

Use these specifications when insulating finished attics.

- ✓ Seal large air leaks between conditioned and non-conditioned spaces.
- ✓ Inspect the structure to confirm that it has the strength to support the weight of the insulation.
- ✓ Insulate access hatches to the approximate R-value of the assembly through which it is located.
- ✓ Post an insulation certificate, with insulation type, installed thickness, coverage area, and insulation R-value at the attic entrance.

Attic floor and knee wall: Establish an air barrier at the attic floor and knee wall if you insulate these assemblies.

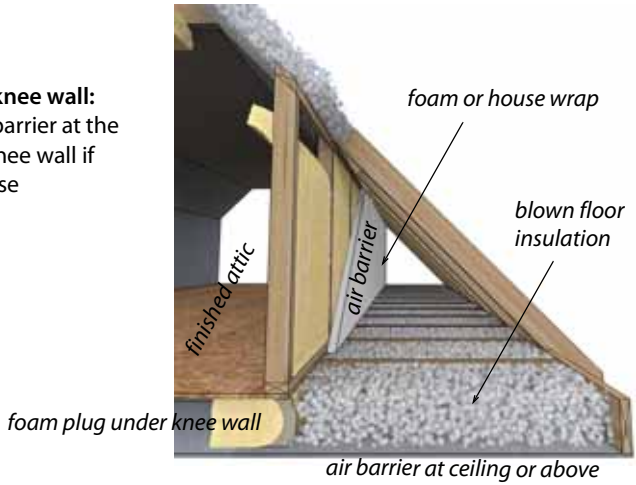

Attic Floor

There are a number of options for insulating the attic floor of a finished attic with knee walls. By attic floor, we mean the ceiling of the living space below with its ceiling joists and any floor sheeting installed over the joists for a storage platform.

- Install blown fibrous insulation over the ceiling, which should be an air barrier.
- Install blown fibrous insulation over existing insulation.
- Install fiberglass batts over the ceiling, which should be an air barrier.
- Install fiberglass batts over the existing insulation.

Whichever of these options that you choose, do the necessary air sealing to the attic floor before installing insulation. Also observe the preparations and safety precautions discussed in *"Preparing for Attic Insulation" on page 126* and *"Safety Preparations for Attic Insulation" on page 127*.

Exterior Walls of Finished Attic

Insulate these walls as described in *"Retrofit Closed-Cavity Wall Insulation" on page 169* or *"Open-Cavity Wall Insulation" on page 173*.

Collar-Beam Attic

Insulate this type of half-story attic as described in *"Blowing Attic Insulation" on page 131*.

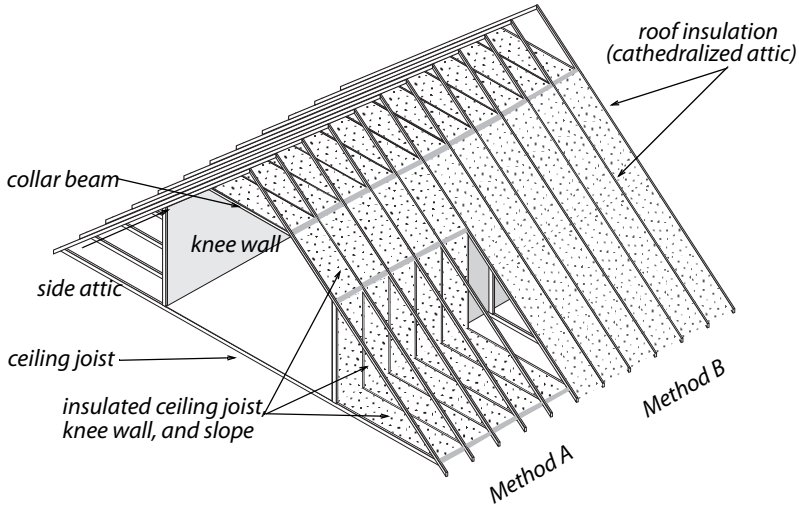

Finished attic: This illustration depicts two approaches to insulating a finished attic. Either A) insulate the knee wall and side attic floor, or B) insulate the roof deck.

Sloped Roof

Insulate sloped roof with densepack fiberglass or cellulose insulation. Install plugs of fiberglass batt, or other vapor permeable material, at the ends of this cavity to contain the blown insulation while allowing it to breathe.

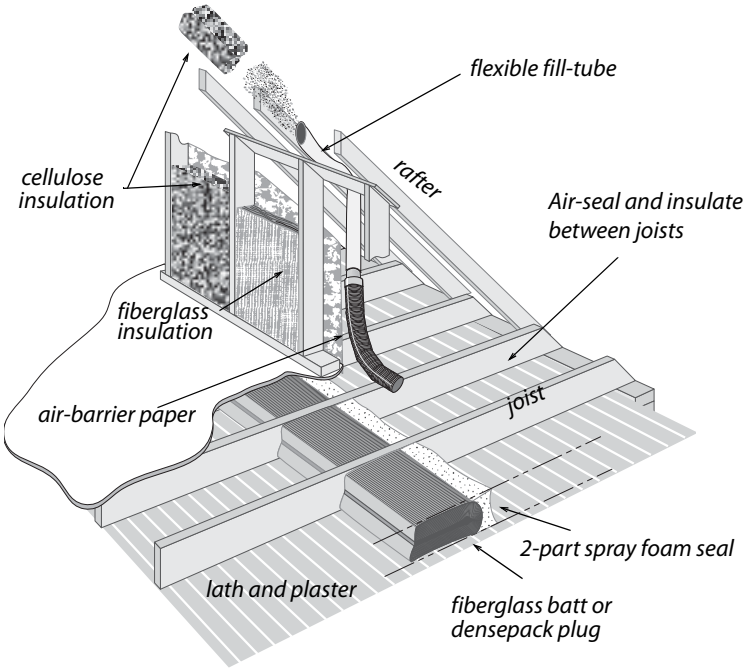

Finished attic best practices: Air sealing and insulation combine to dramatically reduce heat transmission and air leakage in homes with finished attics.

4.2.11 Knee Wall Insulation

SWS Details: 4.1004.1 Preparation for Dense Packing, 4.1004.3 Strapping for Existing Insulation, 4.1004.4 Knee Wall Without Framing, 4.1004.5 Knee Walls and Gable End Walls—Preparation for and Installation of Spray Polyurethane Foam (SPF)

Insulate knee walls using any of these methods.

- Install un-faced fiberglass batts and cover the insulation with house wrap on the attic side. Prefer R-13 or R-15, 3.5-inch fiberglass batts.
- Install the house wrap or another insulation restrainer first and reinforce it with wood lath. Then blow dense-packed fibrous insulation into the cavity through the house wrap

and patch the house wrap with tape. (Cellulose: 3.5 pcf; fiberglass 2.2 pcf)

- Spray the cavities with open-cell or closed-cell polyurethane foam after gaining access to the cavities and removing surface dirt to ensure good adhesion.
- For knee walls without framing, mechanically fasten rigid insulation to the wall's surface.

Preparation for Kneewall Insulation

Make whatever repairs and seal air leaks before installing the knee-wall insulation.

- ✓ Seal all large air leaks with structural materials.
- ✓ Seal all joints, penetrations, and other potential air leaks in the cavities with caulk or foam.
- ✓ Before installing caulk or spray foam insulation, clean dust and any other material that might interfere with the spray foam's adhesion.

Air Sealing and Insulating under the Knee Wall

To seal and insulate under the knee wall, create an airtight and structurally strong seal in the joist spaces under the knee wall. Consider these options.

- Install sealed wood blocking between the floor joists covered with spray foam.
- Insert 2-inch-thick foam sheets and foam their perimeters with one-part or two-part foam.
- Insert a fiberglass batt into the cavity and foam its face with an inch of two-part closed-cell spray foam.

4.2.12 Access Doors in Vertical Walls

SWS Detail: 4.1006.2 Access Doors and Hatches

For kneewall access doors, observe the following.

- ✓ Insulate knee-wall access hatches and collar-beam access hatch with rigid-foam insulation to the equivalent R-value of the surrounding surfaces. (IECC 2012)
- ✓ Weatherstrip the hatch and install a latch or other method to hold the access door closed against the weatherstrip.

Insulated access door in knee wall: Achieve an R-value as close to the wall as practical. Weatherstrip the door and install some type of latch.

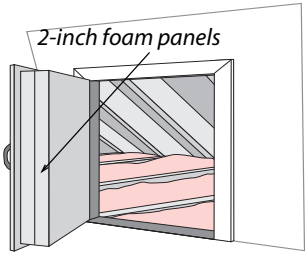

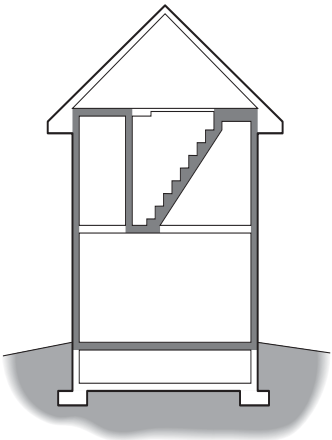

Insulating and sealing attic stair walls, doors, and stairs: Insulating and air sealing these is one way of establishing the thermal boundary.

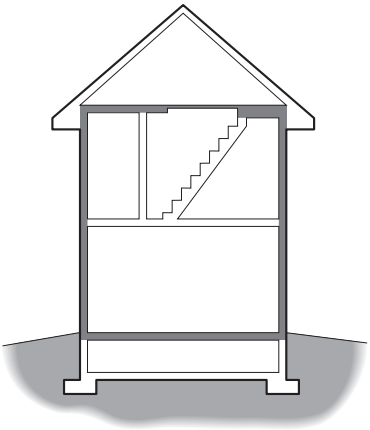

Insulating and weatherstripping the attic hatch: Air sealing around the hatch and insulating the hatch is an alternative method.

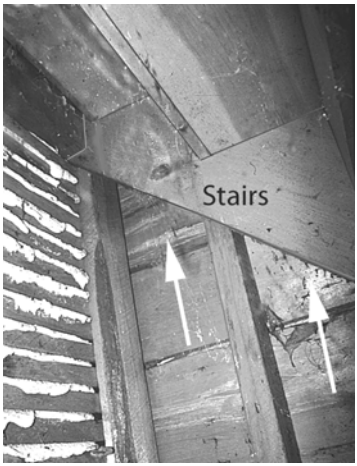

4.2.13 Walk-Up Stairways and Doors

SWS Detail: 4.1006.2 Access Doors and Hatches, 3.1002.1 Interior with Sloped Ceiling, 3.1002.3 Stairwell to Attic—Door at Top with Finished Ceiling Above, 3.1002.3 Stairwell to Attic—Door at Top with Finished Ceiling Above

Think carefully about how to install a continuous insulation blanket and air barrier around or over the top of an attic stairway. If you enter the attic by a stairwell and standard vertical door, use these instructions.

- ✓ Blow dense-pack fibrous insulation into walls of the stairwell.
- ✓ Install a threshold or door sweep, and weatherstrip the door.
- ✓ Insulate or replace the door with an insulated door if cost effective.
- ✓ Blow dense-packed insulation into the sloping cavity beneath the stair treads and risers.

You can also establish the thermal boundary at the ceiling level, but this requires a horizontal hatch at the top of the stairs.

When planning to insulate stairwells, investigate barriers such as fire blocking that might prevent insulation from filling cavities you want to fill. Also consider what passageways may lead to areas you don't want to fill such as closets.

4.2.14 Insulating & Sealing Pull-Down Attic Stairways

SWS Detail: 4.1006.1 Pull-Down Stairs

Pull-down attic stairways are sometimes installed above the access hatch. Building a foam-insulated box or buying a manufactured stair-and-hatchway cover are good solutions to insulating and sealing this weak point in the ceiling insulation. Install weatherstripping around the insulated box.

Educate the client on the purpose and operation of stair-and-hatchway cover, and ask them to carefully replace it when they access the attic.

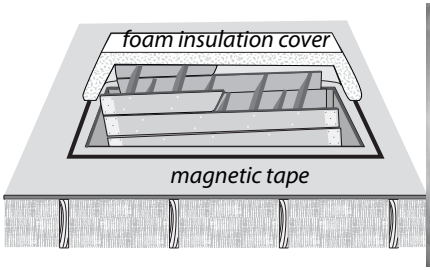

Manufactured pull-down-stair covers: Manufacturers provide insulated stair covers for use with walkable attic floors or with dams to be surrounded by fibrous insulation.

4.2.15 Parapet Walls

SWS Detail: 4.1088.4 Parapet Walls—Dense Pack, 4.1088.5 Parapet Walls—Spray Polyurethane Foam (SPF)

Parapet walls are a continuation of exterior walls that rise above the roof. Parapet walls are often an air-leakage and thermal bridging problem because the insulation and air barrier aren't continuous between the exterior wall and roof.

Inspect the parapet area from both indoors and outdoors and decide how to connect the wall insulation and air barrier with the roof insulation and air barrier. Consider these two alternatives.

1. Install an air barrier and dense-pack the wall cavity of the parapet.
2. Spray foam the parapet to connect the insulation and air barrier of the exterior wall with attic or roof insulation and air barrier.

4.2.16 Skylights

SWS Details: 4.1088.3 Skylights

Skylights are places where the insulation and air barrier may not be continuous. Inspect the insulation and air barrier of the skylight shaft. Install insulation and air seals as necessary to make a continuous insulated and air-sealed assembly as shown in the illustration.

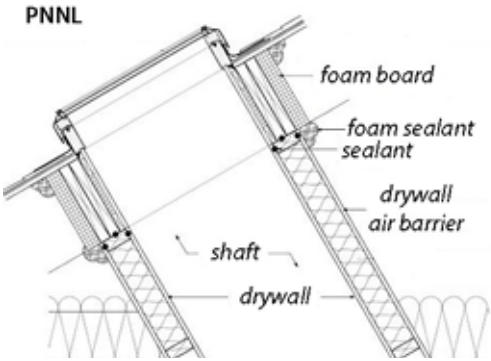

Insulated and air sealed skylight: The skylight shaft must be insulated and air sealed from the ceiling to the roof.

4.2.17 Whole-House Fans

SWS Detail: 4.1006.3 Whole-House Fan

Whole-house fans can create significant thermal bridging if they aren't dammed and insulated thoroughly around their perimeter. Whole-house fans can leak a lot of air if they lack an airtight seasonal cover.

Whole house fans: The whole-house fan has a dam to allow the sides of its opening to be thoroughly insulated. The movable insulation is installed at the grille indoors.

- ✓ Build a foam panel as thick as practical and install it inside the whole-house fan's frame from indoors.
- ✓ Use clips or other restrainers to hold the panel in place.
- ✓ Install weatherstrip around the perimeter to limit air leakage.

4.3 SWS Alignment

Field Guide Topic	SWS Detail
Air-Sealing Attics and Roofs Pg. 113	
Sealing around Manufactured Chimneys Pg. 113	3.1001.1 Penetrations and Chases
Sealing around Fireplaces and Chimneys Pg. 114	3.1001.1 Penetrations and Chases
Air Sealing Recessed Lights Pg. 115	3.1003.5 Dropped Ceiling with Light Boxes and Fixtures, 3.1003.6 Dropped Soffits, 4.1001.1 Non-Insulation Contact (IC) Recessed Light
Sealing Stairways to Unconditioned Attics Pg. 118	3.1002.1 Interior with Sloped Ceiling, 3.1002.2 Stairwell to Attic—Door at Bottom with No Ceiling Above, 3.1002.3 Stairwell to Attic—Door at Top with Finished Ceiling Above
Sealing Porch Roof Structures Pg. 119	
Removing Insulation for Attic Air Sealing Pg. 120	

Field Guide Topic	SWS Detail
Sealing Joist Cavities Under Knee Walls Pg. 121	4.1004.1 Preparation for Dense Packing, 4.1004.2 Preparation for Batt Insulation
Sealing Kitchen or Bathroom Interior Soffits Pg. 121	3.1001.1 Penetrations and Chases, 3.1001.2 Chase Capping 3.1003.6 Dropped Soffits
Sealing Two-Level Attics Pg. 122	3.1001.3 Walls Open to Attic—Balloon Framing and Double Walls
Sealing Suspended Ceilings Pg. 123	3.1003.1 New Ceiling Below Original—Old Ceiling Intact or Repairable, 3.1003.2 Ceiling Leaks Not Repairable—No Air Barrier Above, 3.1003.4 3-D Walls, 3.1003.3 Above Closets and Tubs, 3.1003.5 Dropped Ceiling with Light Boxes and Fixtures
Insulating Attics and Roofs Pg. 125	
Preparing for Attic Insulation Pg. 126	Subtopic 4.1001 General Preparation 4.1001.4 Vented Eave or Soffit Baffles, 4.1001.1 Non-Insulation Contact (IC) Recessed Lights

Field Guide Topic	SWS Detail
Safety Preparations for Attic Insulation Pg. 127	4.1001.1 Non-Insulation Contact (IC) Recessed Light, 4.1006.3 Whole-House Fan 4.1005.2 Accessible Floors—Loose Fill Installation, 4.1005.3 Accessible Floors—Batt Insulation Over Existing Insulation, 4.1005.4 Accessible Floors—Loose Fill Over Existing Insulation 4.1001.2 Knob and Tube Wiring
Blowing Attic Insulation Pg. 131	4.1005.2 Accessible Floors—Loose Fill Installation, 4.1005.4 Accessible Floors—Loose Fill Over Existing Insulation, 4.1005.8 Loose Fill Over Existing Insulation on Accessible Attic Floors
Closed-Cavity Attic Floors Pg. 133	4.1003.4 Cape Cod Side Attic Roof—Dense Pack Installation
Insulating Closed Roof Cavities Pg. 134	4.1002.1 Above Deck Roof Insulation—Preparation, 4.1002.2 Above Deck Roof Insulation—Installation, 4.1003.3 Unvented Flat Roof with Existing Insulation, 4.1001.5 Dense Pack Preparation
Exterior Rooftop Foam Insulation Pg. 137	
Installing Fiberglass Batts in Attics Pg. 138	4.1005.3 Accessible Floors—Batt Insulation Over Existing Insulation

Field Guide Topic	SWS Detail
Cathedralized Attics (Open Cavity) Pg. 138	4.1003.2 Pitched/Vaulted/ Cathedralized Ceilings—Dense Pack Over, 4.1003.5 Unvented Roof Deck—Spray Polyurethane Foam Installation, 4.1001.7 Vented Roof Deck—Preparation for SPF, 4.1003.7 Ignition and Thermal Barriers—Spray Polyurethane Foam
Vaulted Attics Pg. 140	4.1003.1 Pitched/Vaulted/ Cathedralized Ceilings—Loose Fill Over
Finished Knee Wall Attics Pg. 141	4.1004.1 Preparation for Dense Packing, 4.1005.1 Accessible Floors—Batt Installation
Access Doors in Vertical Walls Pg. 145	
Walk-Up Stairways and Doors Pg. 147	4.1006.2 Access Doors and Hatches, 3.1002.1 Interior with Sloped Ceiling, 3.1002.3 Stairwell to Attic—Door at Top with Finished Ceiling Above, 3.1002.3 Stairwell to Attic—Door at Top with Finished Ceiling Above
Insulating & Sealing Pull-Down Attic Stairways Pg. 148	4.1006.1 Pull-Down Stairs

Field Guide Topic	SWS Detail
Parapet Walls Pg. 149	4.1088.4 Parapet Walls—Dense Pack, 4.1088.5 Parapet Walls—Spray Polyurethane Foam (SPF)
Skylights Pg. 149	4.1088.3 Skylights
Whole-House Fans Pg. 150	4.1006.3 Whole-House Fan

CHAPTER 5: WALLS

This chapter discusses air sealing and insulation for walls in existing buildings. Air sealing begins by inspecting the discontinuities in walls, such as the following.

- Inside and outside corners of walls.
- Openings for windows and doors.
- Protrusions and indentations in walls.

Insulation begins by evaluating the existing wall insulation and deciding on the cost-effectiveness of installing additional wall insulation. Other wall-insulation issues may include the following.

- Whether to insulate from interior or exterior of the home.
- How to open a wall cavity and restore it after insulating the wall cavity.
- How to install insulation to the wall's surface.

5.1 AIR SEALING WALLS

Most wall air leakage involves the wall's discontinuities, joints, and irregularities.

5.1.1 Built-In Cabinets/Shelves

Built-in cabinets and shelves are a feature of older homes and present challenges for air sealing. Sealing these areas from inside the cabinet requires care and attention to appearances.

- ✓ If possible, establish both an air barrier and insulation behind the cabinet, out of sight of the occupants.
- ✓ Install drywall or wood wherever the cabinet is open to a wall cavity after insulating the cavity.

- ✓ Use caulking that is compatible with the colors of the surrounding wood if you seal its interior-facing side.

Built-ins and other connected air leaks: Built-in cabinets, a chimney chase, and recessed lights create a major air leakage problem in this living room.

5.1.2 Wall Framing Around Fireplaces and Chimneys

SWS Detail: 3.1001.1 Penetrations and Chases

Leaks around fireplace chimneys are often severe air leaks. Use this procedure to seal air leaks through the chimney chase.

- ✓ Cut sheet metal to fit the gap that borders the chimney with overlaps connecting to nearby framing lumber.
- ✓ Bed the sheet metal air seal in sealant (ASTM E136), and then fasten the sheet metal to the framing with staples, nails, or screws.
- ✓ Seal the metal patch to chimney or flue with a non-combustible sealant.
- ✓ For large chimney chases, cover the chase opening with structural material such as plywood. Maintain clearances between the structural seal and the metal or masonry chimney as listed in *"Clearances to Combustibles for Common Chimneys" on page 286*.

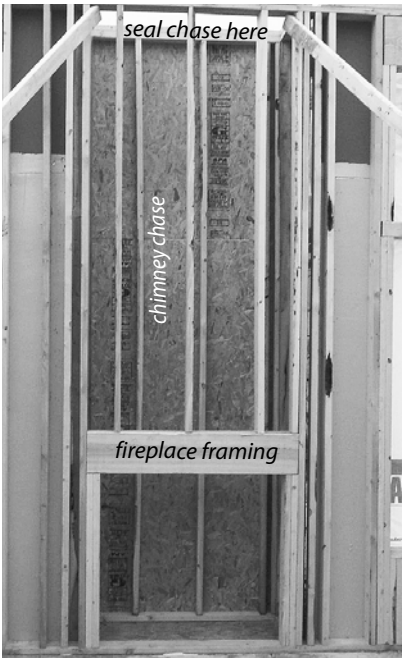

Chimney chase: Chimney chases can be multistory air-leak conduits if they're not sealed at floors and ceilings.

5.1.3 Pocket Door Cavities

SWS Detail: 3.1201.4 Pocket Door

When located on the second floor, cap the top of the entire wall cavity in the attic with rigid board, caulked and mechanically fastened.

5.1.4 Cooling Appliances Installed through Walls or Windows

Room air conditioners, room heat pumps, and evaporative coolers are sometimes installed through walls or in windows. The units installed in windows are often very leaky because of the temporary nature of the air seals.

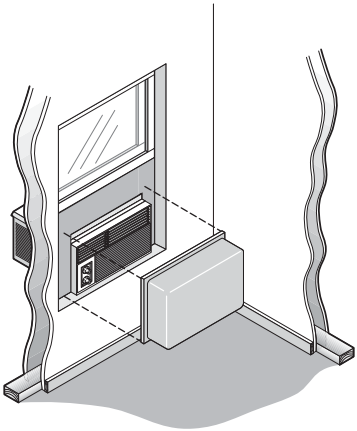

Room-air-conditioner cover: If you can't take the unit out for the winter, cover it with a room-air-conditioner cover.

- Remove window units in the fall and re-install in the spring.
- If the client doesn't want to remove the unit seasonally, cover the unit with a room-air-conditioner cover as shown here.
- Units installed through walls should have a sheet-metal sleeve that seals well to the surrounding framing and finish. This metal sleeve provides a smooth surface to seal to the room air conditioner or heat pump.
- Seal the unit's perimeter with one-part foam or caulking, depending on the width of the joint.

5.1.5 Balloon Framed Walls

SWS Detail: 3.1001.3 Walls Open to Attic—Balloon Framing and Double Walls

Balloon framed two-story walls are common in older homes. Some modern homes have balloon framed gable walls, where the studs rise above the level of the ceiling joists and are cut at an angle to frame the gable. Even when these balloon framed gable walls are full of insulation, air can convect through the insula-

tion. On occasion, windstorms have blown the insulation out of the wall cavity into the attic.

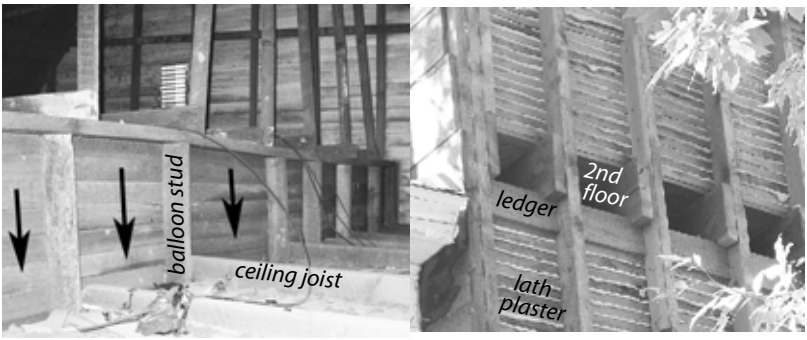

Balloon framed walls: Wall cavities, shown from outdoors at right and from the attic at left, are open to the floor cavity, the attic, and the crawl space.

- ✓ Dense-pack insulation into the wall cavities to reduce air leakage and convection.
- ✓ If possible, dense-pack insulation into an air-permeable bag inserted with the fill tube into the balloon-wall floor cavity.
- ✓ Seal stud cavities from the attic, basement, or crawl space with a insulation plug, covered with a 2-part foam air seal.
- ✓ Or seal the tops and bottoms of cavities with a rigid barrier, such as drywall or plywood, sealed and bonded to surrounding materials 2-part foam.

See also "Wall Insulation" on page 164.

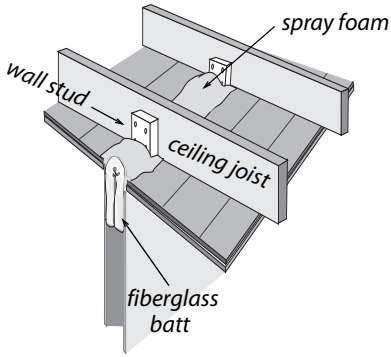

Balloon framed interior walls: Fiberglass insulation covered by a 1-inch layer of two-part foam seals wall cavities.

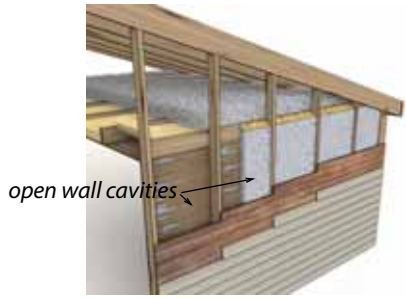

Balloon framed gable: Studs extend above the ceiling allowing convection from the attic.

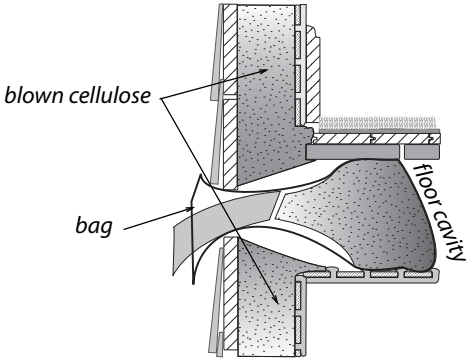

Sealing wall-floor junction: Blown insulation reduces convection through walls and floors. An air-permeable bag helps contain and pack the blown insulation that extends into the floor cavity.

5.2 Minor Air Sealing

Minor air sealing includes sealing small openings with such materials as caulk or weather stripping.

5.2.1 Window and Door Frames

Sealing from the exterior serves to keep bulk water out and protect the building. If the crack is deeper than $^{5}/_{16}$-inch, it should be backed with a material such as backer rod and then sealed with caulk. Any existing loose or brittle material should be

removed before the crack is re-caulked. *See also "Windows and Doors" on page 207.*

Silicone bulb weatherstrip: Silicone bulb has its own adhesive or is adhered to surfaces with silicone caulking.

5.2.2 Rim Joist Area

The rim joist area is composed of several joints. They can be sealed from the basement or crawl space with caulk or foam. Remove dust before applying sealant. *See also "Rim-Joist Insulation and Air-Sealing" on page 191.*

5.2.3 Masonry Surfaces

Masonry surfaces are best sealed with a cement-patching compound, mortar mix, or high quality caulking, such as polyurethane. For cement-based patches, buy a mix designed for patching and prime the damaged areas with a concrete adhesive.

5.2.4 Interior Wall Top Plates

Drywall is installed after interior walls are constructed. The top plates of interior walls are open to the attic. Top plate shrinkage opens up cracks that run the entire length of the interior wall. Move insulation and seal the cracks with caulking or two-part foam.

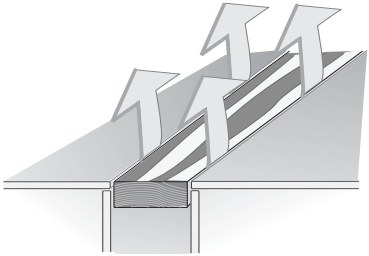

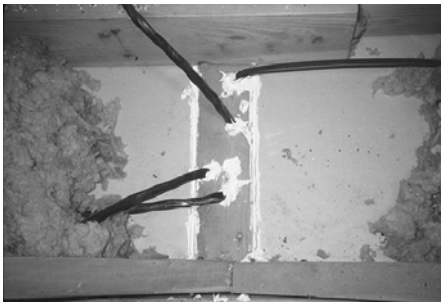

Leaky top plates: The cracks along top plates are from lumber shrinkage. They are small cracks but there are long lengths of them.

5.3 Wall Insulation

Install wall-cavity insulation with a uniform coverage and density. Wall cavities encourage airflow like chimneys. Convection currents or air leakage can significantly reduce wall insulation's thermal performance if channels remain for air to migrate or convect.

Blown Wall-Insulation Types

Cellulose, fiberglass, and open-cell polyurethane foam are the leading insulation products for retrofit-installation into walls.

Table 5-1: Wall Insulation Density and R-Value per Inch

Insulation Material	Density	R-Value/in.
Fiberglass (virgin fiber)	2.2 pcf	4.1
Cellulose	3.5 pcf	3.4
Open-cell urethane foam	0.5 pcf	3.8
pcf = pounds per cubic foot		

5.3.1 Wall Insulation: Preparation and Follow-up

SWS Detail: 4.1101.1 Exterior Wall Dense Packing, 4.1101.2 Exterior Wall Insulating Sheathing, 4.1101.3 Exterior Wall Spray Polyurethane Foam (SPF)—Masking and Surface Preparation, 4.1101.4 Exterior Wall Spray Polyurethane Foam (SPF)—Electrical System Considerations

Inspect and repair walls thoroughly to avoid damaging the walls, blowing insulation into unwanted areas, or causing a dust hazard.

Preparing for Wall Insulation

Before starting to blow insulation into walls, take the following preparatory steps.

- ✓ Calculate how many bags of insulation are needed to achieve the R-value specified on the bag's label.
- ✓ Inspect walls for evidence of moisture damage. If an inspection of the siding, sheathing, or interior wall finish shows a moisture problem, don't install sidewall insulation until the moisture problem is identified and solved.
- ✓ Inspect indoor surfaces of exterior walls to assure that they are strong enough to withstand the force of insulation blowing. Reinforce interior sheeting as necessary.
- ✓ Inspect for interior openings or cavities through which insulation may escape. Examples include balloon-framing openings in the attic or crawl space, pocket doors, unbacked cabinets, interior soffits, and openings around pipes under sinks, and closets. Seal these openings to prevent insulation from escaping the wall cavity.
- ✓ Verify that exterior wall cavities aren't used as return or supply ducts. Either avoid insulating these cavities, or remove the ducts and reinstall them somewhere else.

- ✓ Verify that electrical circuits inside the walls aren't overloaded. Maximum ampacity for 14-gauge copper wire is 15 amps and for 12-gauge copper wire is 20 amps. Install S-type fuses to prevent circuit overloading if necessary. Don't insulate cavities containing knob-and-tube wiring. *See "Electrical Safety" on page 43.*

Balloon-framed gable wall insulation: Spray foam plug or other rigid dam prevents insulation from escaping the wall cavity. The dam also prevents air circulation or wind washing through wall insulation.

Patching and Finish after Insulating

The insulators, the home owner, and others should agree about the patching method and the final appearance of the wall finish. The insulators are usually responsible for patching holes and returning the interior or exterior finish to its previous condition or some pre-agreed level of finish.

- ✓ Patch the exterior wall sheathing with wood plugs, plastic plugs, or spray foam insulation.
- ✓ Use caulk or putty and primer to dress exposed exterior plugs.
- ✓ Seal gaps in external window trim and other areas that may admit rain water into the wall.
- ✓ Patch interior finish with standard plastering methods or a chair rail trim board.

✓ Install drywall with joint compound to open cavities to comply with IRC fire codes.

Wall Insulation Quality Control

Retrofit wall insulation has more risk of incomplete application than insulation that you can visually inspect. Consider these quality control options to verify the proper coverage and density of retrofit wall insulation.

- Viewing the wall through an infrared camera.
- Looking through an electrical outlet or other access hole for insulation.
- Calculation of installed weight of installed insulation compared to wall-cavity volume and required density.

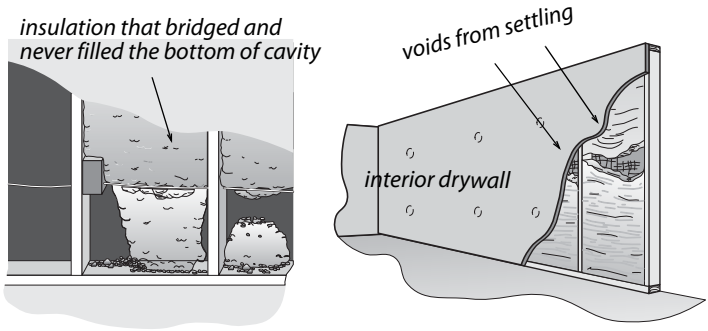

Problems with low density insulation: Blowing insulation through one or two small holes usually creates voids inside the wall cavity. This is because insulation won't reliably blow at an adequate density more than about one foot from the nozzle. Use tube-filling methods whenever possible, using a 1.5-inch hose inserted through a 2-inch or larger hole.

Drilling Exterior Sheathing: Insulation Retrofit

Do not drill through exterior siding without the written authorization of the property owner and local WAP agency. Where possible, carefully remove siding and drill through sheathing. This procedure avoids the potential lead-paint hazard of drilling the siding. Drilling through only the sheathing also makes it easier

to insert flexible fill tubes since the holes pass through only one layer of material.

If you can't remove the siding, consider drilling the walls from inside the home. Obtain the owner's permission before drilling indoors, and practice lead-safe weatherization procedures. *See page 54.*

Consider these possible methods of removing siding.

- Cut completely through the paint on wood-siding joints with a sharp utility knife before carefully prying the siding off.
- Remove asbestos shingles by pulling the nails holding the shingles to the sheathing, or else cut off the nail heads. Dampen the asbestos tiles to reduce dust. Wear a respirator and coveralls when working with asbestos siding. All work involving Asbestos Cement Shingles (ACS) must be completed only by contractors authorized by DHCD and in compliance with the Massachusetts ACS Guidance regarding notification requirements and protocols.
- Use a zip tool to remove metal or vinyl siding.
- Insulate homes with brick veneer or blind-nailed asbestos siding from the indoors.
- Use a decorative chair rail to cover holes drilled indoors.

Restore holes drilled for insulation to an appearance as close to original as possible, or in a manner that is satisfactory to the customer.

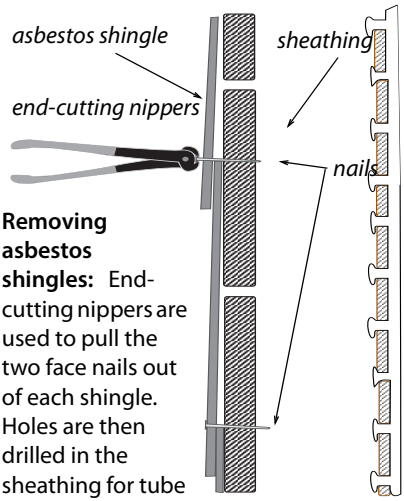

Removing asbestos shingles: End-cutting nippers are used to pull the two face nails out of each shingle. Holes are then drilled in the sheathing for tube filling.

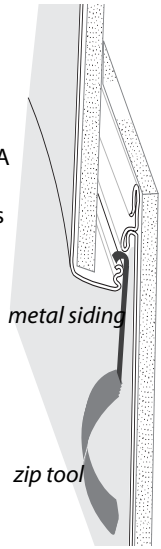

Removing metal siding: A zip tool separates joints in metal siding.

5.3.2 Retrofit Closed-Cavity Wall Insulation

SWS Detail: 4.1103.1 Dense Pack Exterior Walls, 4.1103.2 Additional Exterior Wall Cavities

This section describes six ways of installing wall insulation.

1. Blowing walls with fibrous insulation using a fill tube from indoors or outdoors.
2. Installing batts in an open wall cavity.
3. Injecting liquid foam into a closed wall cavity.
4. Spraying wet-spray fiberglass or cellulose into an open wall cavity.
5. Spray open-cell or closed-cell foam into an open wall cavity.
6. Blowing fibrous insulation behind netting.

Blowing Walls with a Fill-Tube

Install dense-pack wall insulation using a blower equipped with separate controls for air and material feed. Mark the fill tube in one-foot intervals to help you verify when the tube reaches the top of the wall cavity.

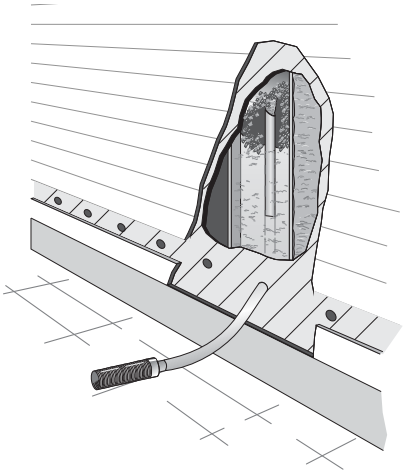

Tube-filling walls: This method can be accomplished from inside or outside the home. It is the preferred wall insulation method because it is a reliable way to achieve a uniform coverage and density.

To prevent settling, cellulose insulation must be blown to at least 3.5 pounds per cubic foot (pcf) density. Fiberglass dense-pack must be 2.2 pcf and the fiberglass material must be designed for dense-pack installation.

Insulate walls using this procedure.

1. Drill 2-to-3-inch diameter holes to access the stud cavity.
2. Probe all wall cavities through holes, before you fill them with the fill tube, to identify fire blocking, diagonal bracing, and other obstacles.
3. Start with several full-height, unobstructed wall cavities so you can measure the insulation density and calibrate the blower. An 8-foot cavity (2-by-4 on 16-inch centers)

should consume a minimum of 10 pounds of cellulose or 6 pounds of fiberglass.

4. Insert the hose all the way to the top of the cavity. Start the machine, and back the hose out slowly as the cavity fills.
5. Then fill the bottom of the cavity in the same way.
6. After probing and filling, drill whatever additional holes are necessary for complete coverage. For example: above windows, missed areas with fire blocking.
7. Use the blower's remote control to achieve a dense pack near the hole while limiting spillage.
8. Seal and plug the holes, repair the weather barrier, and replace the siding.

Insulating the Wall-Floor Junction of Balloon-Framed Walls

When insulating the perimeter of balloon-framed walls between the first and second floors, blow an insulation plug, when possible, into the perimeter floor cavities for both thermal resistance and air-sealing. This insulation plug prevents the floor cavity from being a duct for air convection and leakage. Using a fill tube, blow the insulation into a air-permeable bag that expands inside the cavity. The bag limits the amount of insulation necessary to air-seal and insulate this area.

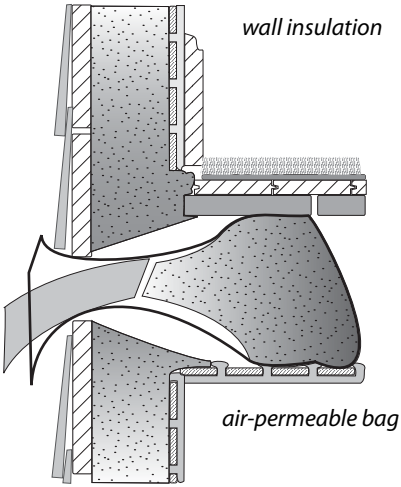

Balloon framing: Floor cavities are usually connected to wall cavities. Blow a plug of insulation into the floor cavity to seal this leaky uninsulated area.

Injecting Liquid Foam

Injecting liquid foam is more expensive than blowing fibrous insulation but offers better performance when existing walls are partially filled by batts. The batts are often 1-to-2 inches thick and are usually flush with the interior drywall or plaster. Try injecting the foam from outdoors to fill the cavity and compress the batt slightly. From indoors, the foam may just stretch the batt facing and fail to create a fully insulated wall cavity.

Open-cell polyurethane foam, formulated to expand less than the sprayed variety, is the leading wall-retrofit foam. Technicians install the foam through holes (<1 inch) spaced about two feet apart using a simple nozzle that barely enters the cavity. Technicians use drinking straws or other indicators to judge the level that the foam has filled during installation. Technicians don't normally use fill tubes to inject open-cell foam because the tube would be too difficult to clean.

See "Fire Protection for Foam Insulation" on page 104.

5.3.3 Open-Cavity Wall Insulation

SWS Details: 4.1102.1 Open Wall Insulation—General, 4.1102.2 Open Wall—Spray Polyurethane Foam (SPF) Installation

Fiberglass batts are the most common open-cavity wall insulation. Batts achieve their rated R-value only when installed carefully. If there are gaps between the cavity and batt at the top and bottom, the R-value can be reduced by as much as 30 percent. The batt should fill the entire cavity without spaces in corners or edges.

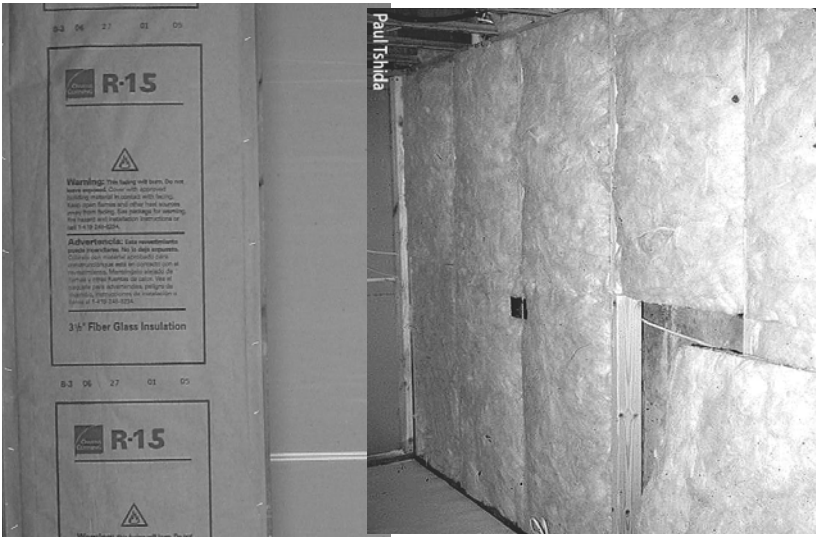

R-15 fiberglass batts: Install R-15 batts in open walls and attach them to the face of the stud as shown above. Or install unfaced batts as shown below. Either way, cut the batts accurately and install them carefully.

- ✓ Use unfaced friction-fit batt insulation where possible. Fluff the batts during installation to fill the depth of the wall cavity.
- ✓ Choose medium- or high-density batts: R-13 or R-15 rather than R-11, and R-21 rather than R-19.
- ✓ Seal all significant cracks and gaps in the wall structure before or after you install the insulation.

- ✓ Insulate behind and around obstacles with scrap pieces of batt, trying not to compress them, before installing batts.
- ✓ Staple faced insulation to outside face of studs on the warm side of the cavity. Don't staple the facing to the side of the studs, even though drywallers may prefer that method, because this method leaves an air space that encourages convection currents.
- ✓ Cut batt insulation to the exact length of the cavity. A too-short batt creates air spaces above and beneath the batt, allowing convection. A too-long batt bunches and folds, creating air pockets.
- ✓ Split batt around wiring, rather than letting the wiring compress the batt to one side of the cavity.
- ✓ Fiberglass insulation, exposed to the interior living space, must be covered with minimum half-inch drywall or other material that has an ASTM flame spread rating of 25 or less.
- ✓ Fiberglass batts exposed to unoccupied spaces like attics must be covered with an air barrier such as house wrap or foam sheeting to prevent R-value degradation by convection and human exposure to fibers.

See "Fiberglass Batts and Blankets" on page 97.

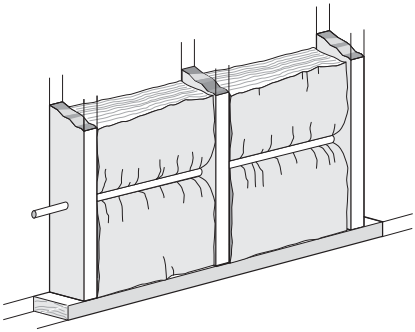

Fiberglass batts, compressed by a cable: This reduces the wall's R-value by creating a void between the insulation and interior wallboard.

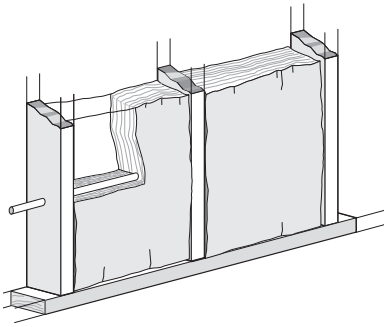

Batt, split around a cable: The batt attains its rated R-value.

Sprayed Open-Cavity Wall Insulation

Both fibrous and foam insulation can be sprayed into open wall cavities. Varieties include the following.

- Fiberglass or cellulose mixed with water and glue at a special nozzle sprayed into the open wall cavity with the excess shaved off (fibrous damp-spray insulation).

Spraying open-cell foam: The sprayed open-cell foam is left short of filling the cavity or else shaved off.

- Open-cell or closed-cell polyurethane foam sprayed into an open wall cavity and either held short of filling the whole cavity or with the excess foam shaved off after it cures.

Blowing Open Wall Cavities behind Netting or Fabric

Blowing dry fibrous insulation behind netting or fabric is a common way of insulating open walls before drywall application, especially with cellulose. However, you must install the insulation to a sufficient density to resist settling.

- ✓ Verify density of at least 3.5 pcf for cellulose or 1.6 pcf for fiberglass.
- ✓ Select a restrainer netting or fabric that will allow the above densities without bulging excessively.
- ✓ Fasten the netting or fabric with power-driven staples, 1.5 inches apart.
- ✓ Roll bulging insulation with a roller to facilitate drywall installation.

5.3.4 Insulated Wall Sheathing

SWS Detail: 4.1103.3 Insulated Sheathing and Insulated Siding Installation

Insulated wall sheathing covers the wall surface with insulation, reducing thermal bridging through structural framing. Insulated sheathing is an excellent retrofit, when you replace the siding and windows.

Insulating wall sheathing is usually foam board, such as polystyrene or polyisocyanurate. Always fill the wall cavity with insulation before installing insulated sheathing.

Fastening Insulating Sheathing

Fastening the insulating sheathing requires one of the following to secure the insulation to the wood sheathing or masonry under it.

- A batten board
- An embedded strip
- A broad staple
- A long screw with a large washer
- A special adhesive (masonry)

Use appropriate fasteners for wood or masonry materials. Wood battens or embedded strips allow attachment of a variety of siding materials. The embedded strips work best with steel, aluminum, or vinyl siding, which are lightweight and drain water through weep holes in every unit of siding.

Terry Davenport

Foam sheathing with battens: One-by-four battens are applied to 4 inches of foam board on the exterior provide a fastening strip for siding and trim.

Foam with embedded strips: Strips of plywood or OSB are spaced on 16 or 24 inch centers at the factory. Wide corner pieces can be added on the job with foam cutting and grooving tools.

5.3.5 Wall Insulation in a Retrofitted Frame Wall

Retrofitters, seeking superior energy performance, sometimes build a wood-frame wall attached to the interior or exterior of the existing wall. Common insulation choices include all the wall-insulation choices discussed previously. Vapor retarders and air barriers must be incorporated into the new wall assembly as appropriate for the climate and existing wall characteristics. The exterior side of a retrofitted insulated frame should have sheathing and a water resistive barrier like house wrap.

Frame wall for insulation: Technicians fastened a frame wall with brackets that place the wall away from the existing exterior wall by a half inch so that the sprayed foam can flow behind the studs and plates to reduce thermal bridging.

Open-cell polyurethane foam: The foam was sprayed into the cavities and the excess shaved off. New sheathing, house wrap, siding, and windows follow later.

5.3.6 Insulating Unreinforced Brick Walls

SWS Detail: 4.1103.3 Insulated Sheathing and Insulated Siding Installation

Unreinforced means that the builders used no steel or other metal reinforcement. There are three types of unreinforced brick walls.

1. Traditional brick walls with header bricks that hold two layers of stretcher bricks together. Larger buildings may have three or more brick layers instead of two.
2. Various types of hollow brick walls with usually one layer of brick on either side of an air space.
3. Wood-frame brick veneer walls with a single layer of brick veneer that is attached to a typical wood frame wall.

All three of these brick assemblies may have structural problems depending on the condition of the bricks and mortar joints. Mortar can turn to dust over the decades; hollow brick walls can be frighteningly fragile; and small movements can topple 100-year-old brick veneer. **Consult a structural engineer before making any modification to an unreinforced brick building.**

Hollow brick wall: Two separate single brick walls are held together by wood lath embedded in the mortar joint.

5.4 SWS Alignment

Field Guide Topic	SWS Detail
Air Sealing Walls Pg. 157	
Built-In Cabinets/Shelves Pg. 157	

Field Guide Topic	SWS Detail
Wall Framing Around Fireplaces and Chimneys Pg. 158	3.1001.1 Penetrations and Chases
Pocket Door Cavities Pg. 159	3.1201.4 Pocket Door
Cooling Appliances Installed through Walls or Windows Pg. 159	
Balloon Framed Walls Pg. 160	3.1001.3 Walls Open to Attic—Balloon Framing and Double Walls
Minor Air Sealing Pg. 162	
Window and Door Frames Pg. 162	
Rim Joist Area Pg. 163	
Masonry Surfaces Pg. 163	
Interior Wall Top Plates Pg. 163	
Wall Insulation Pg. 164	
Wall Insulation: Preparation and Follow-up Pg. 165	4.1101.1 Exterior Wall Dense Packing, 4.1101.2 Exterior Wall Insulating Sheathing, 4.1101.3 Exterior Wall Spray Polyurethane Foam (SPF)—Masking and Surface Preparation, 4.1101.4 Exterior Wall Spray Polyurethane Foam (SPF)—Electrical System Considerations
Retrofit Closed-Cavity Wall Insulation Pg. 169	4.1103.1 Dense Pack Exterior Walls, 4.1103.2 Additional Exterior Wall Cavities

Field Guide Topic	SWS Detail
Open-Cavity Wall Insulation Pg. 173	4.1102.1 Open Wall Insulation—General, 4.1102.2 Open Wall—Spray Polyurethane Foam (SPF) Installation
Insulated Wall Sheathing Pg. 176	4.1103.3 Insulated Sheathing and Insulated Siding Installation
Wall Insulation in a Retrofitted Frame Wall Pg. 178	
Insulating Unreinforced Brick Walls Pg. 178	4.1103.3 Insulated Sheathing and Insulated Siding Installation

Chapter 6: Floors and Foundations

The importance of defining the thermal boundary at the building's lower reaches depends on how much of the building's heat loss is moving through the foundation or floor. The building's thermal boundary may not be obvious because of the lack of insulation at both the floor and the foundation. The building owner and energy auditor must choose where to insulate and air seal if these ECMs are cost-effective.

Either the first floor or the foundation wall is the thermal boundary. After choosing, air seal and insulate the chosen thermal boundary.

6.1 Thermal-Boundary Decisions: Floor or Foundation

The results of air-barrier tests can help in selecting the thermal boundary's location. *See "Air Leakage Diagnostics" on page 453.*

Moisture problems, the location of heating and cooling equipment, and the necessity of crawl-space venting are other important considerations.

House-to-crawl-space pressure: Many homes with crawl spaces have an ambiguous thermal boundary at the foundation. Is the air barrier at the floor or foundation wall? Answer: in this case, each forms an equal part of the home's air barrier.

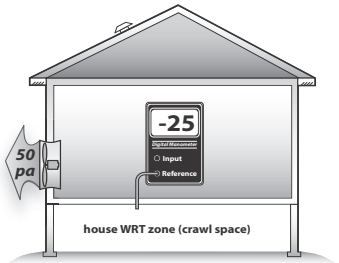

The tables presented next summarize the decision factors for choosing between the floor and the foundation wall as the air barrier. You may also encounter situations that aren't addressed here.

When a home has a basement and crawl space connected, both *Table 6-1 on page 184* and *Table 6-2 on page 185* are relevant to the decision-making process of selecting the air barrier and site for insulation, if insulation is cost-effective. A basement may even be divided from its adjoining crawl space to enclose the basement within the thermal boundary and to place the crawl space outside the thermal boundary.

Table 6-1: Crawl Space: Where Is the Thermal boundary?

Factors favoring foundation wall	Factors favoring floor
Ground moisture barrier and good perimeter drainage present or planned	Damp crawl space with no improvement offered by weatherization
Foundation walls test tighter than floor	Floor air-sealing and insulation are reasonable options, considering access and obstacles
Vents can be closed off	Floor tests tighter than foundation walls
Furnace, ducts, and water pipes located in crawl space	No furnace or ducts present
Concrete or concrete block walls are easily insulated	Building code or code official forbids closing vents
Floor air-sealing and insulation would be more difficult than sealing and insulating the foundation	Rubble masonry foundation wall
Foundation wall is insulated	Floor is already insulated

Table 6-2: Unoccupied Basement: Where Is the Thermal Boundary?

Favors foundation wall	Favors floor
Ground drainage and no existing moisture problems	Damp basement with no solution during weatherization
Interior stairway between house and basement	Floor air-sealing and insulation is a reasonable option, considering access and obstacles
Ducts and furnace in basement	No furnace or ducts present
Foundation walls test tighter than the floor	Floor tests tighter than foundation walls
Basement may be occupied some day	Exterior entrance and stairway only
Laundry in basement	Rubble masonry foundation walls
Floor air-sealing and insulation would be very difficult	Dirt floor or deteriorating concrete floor
Concrete floor	Badly cracked foundation walls

6.2 Air Sealing Foundations and Floors

The floor and foundation are complex structures that can be difficult to air seal. This section describes the most problematic air leakage location in the floor and foundation, and how to seal them.

6.2.1 Plumbing Penetrations

SWS Detail: 3.1001.1 Penetrations and Chases, 3.1001.2 Chase Capping

Seal gaps with expanding foam or caulk. If the gap is too large, stuff it with fiberglass insulation, and spray foam over the top to seal the surface of the plug.

- ✓ Fit large openings with a rigid patch bedded in a sealant like latex caulk or foam tape, which isn't an adhesive.
- ✓ Screw the patch in place, so that a plumber can remove the screws if necessary for access.
- ✓ Seal holes and gaps around pipes with expanding foam or caulk.

Sealing large plumbing penetrations: Bed drywall or wood sheathing in sealant and fasten with nails or screws. Fill gaps around the penetrations with one-part foam to complete this airtight seal.

6.2.2 Stairways to Unconditioned Areas

SWS Detail: 3.1002.1 Interior with Sloped Ceiling, 3.1002.2 Stairwell to Attic—Door at Bottom with No Ceiling Above, 3.1002.3 Stairwell to Attic—Door at Top with Finished Ceiling Above

A variety of stairways and hatchways provide access from the building to an unconditioned basement.

The following components of these stairways may need air sealing and insulation depending on whether they are at the thermal boundary.

- The risers and treads of the stairways
- The surrounding triangular walls
- Vertical or horizontal doors or hatches

- The framing and sheeting surrounding the doors or hatches
- Sloping ceilings above the stairways

Consider the following air-sealing measures.

- ✓ Study the geometry of the stairway and decide where to establish the air barrier and install the insulation.
- ✓ Weatherstrip around doors and hatches if the door or hatch is at the thermal boundary.
- ✓ Seal the walls, stair-stringer space, and ceiling if they are at the thermal boundary.
- ✓ Seal gaps around door frame or hatch frame perimeters with one-part foam, two-part foam, or caulking.

Unfinished stairways: Unfinished spaces underneath stairs create major air leakage pathways between floors and between the attic and crawl space or basement.

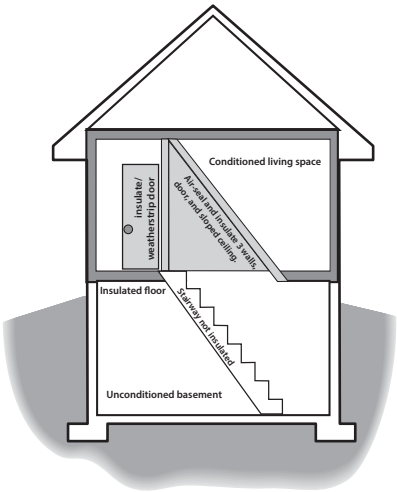

Stairways at the thermal boundary: The stairway may be within the thermal boundary or outside it. Only walls, ceilings, doors, and hatches at the thermal boundary require thorough air sealing. The door as shown is open.

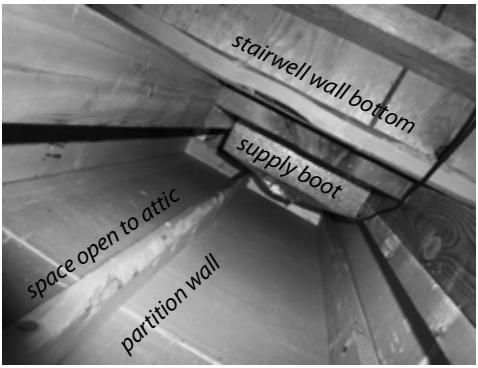

Stairway wall within the thermal boundary: Double wall forming the stairwell connects an unfinished area under the basement stairs with the living spaces, attic, and the space behind the finished basement walls.

6.2.3 Incomplete Finished Basements

Discontinuous wall segments can allow heated basement air to circumvent the finished and insulated wall, carrying heat with it. Complete the finished walls or at least install air barriers between finished living area and unconditioned area between the insulated wall and the foundation wall. Here are two suggestions.

- ✓ Bridge the gap with wood sheeting, bedded in sealant, and caulk the crack around four sides of this long narrow patch.
- ✓ Stuff the gap with pieces of fiberglass batt and spray two-part foam over the gap, at least an inch thick.

See also "Basement Insulation" on page 199.

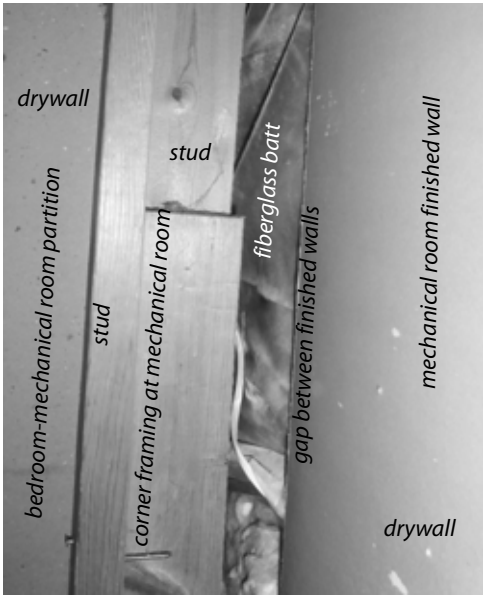

Large air leak in finished basement walls: Two finished basement walls meet inside a mechanical room and form a 2-inch gap from floor to ceiling connecting the finished basement with the space behind its finished walls.

6.2.4 Cantilevered Floors

Floors that hang over their lower story are called cantilevered floors. The underside of the overhanging floor can leak consid-

erably. Many balconies and bay windows have cantilevered floors that leak air into a building's floor cavity.

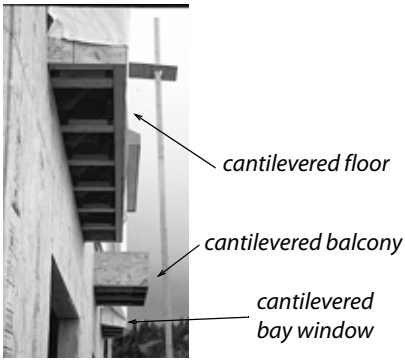

Cantilevered floors under construction: Cantilevered floors allow air leakage into floor cavities because of the lack of sealant and dense-packed insulation.

- ✓ Remove a piece of soffit under the overhanging floor to determine the condition of insulation and air barrier.
- ✓ Stuff the overhanging floor with fiberglass batts or blown fibrous insulation.
- ✓ Bed the sheeting underneath the overhanging floor in sealant where possible. Caulk joints and seams where the sheeting isn't bedded in sealant.
- ✓ Seal any ducts you find in the cantilevered floor sections.

See also "Installing Floor Insulation" on page 192.

6.3 Preparing for Foundation or Floor Insulation

SWS Detail: 4.1402.2 Basement Wall Insulation—No Groundwater Leakage, 4.1402.3 Basement Wall Insulation—Groundwater Leakage

Floor and foundation insulation can increase the likelihood of moisture problems. Installers should take all necessary steps to prevent moisture problems from ground moisture before installing insulation.

6.3.1 Rim-Joist Insulation and Air-Sealing

SWS Detal: 4.1401.1 Band/Rim Joists—Spray Polyurethane Foam (SPF) Installation

The rim-joist spaces at the perimeter of the floor are a major weak point in the air barrier and insulation. Insulating and air sealing both the rim joist and longitudinal box joist are appropriate either as individual procedures or as part of floor or foundation insulation.

Air seal stud cavities in balloon-framed homes as a part of insulating the rim joist. Air seal other penetrations through the rim before insulating. Two-part spray foam is the most versatile air sealing and insulation system for the rim joist because spray foam air seals and insulates in one step.

Polystyrene or polyurethane rigid board insulation are also good for insulating and air sealing the rim joist area. When the rim joist runs parallel to the foundation wall, the cavity may be air sealed and insulated with methods similar to those as shown here.

If you leave the spray foam exposed, it should have a flame spread of 25 or less and be no more than 3.25 inches thick according to the IRC. In habitable spaces, cover all foam with a thermal barrier such as drywall.

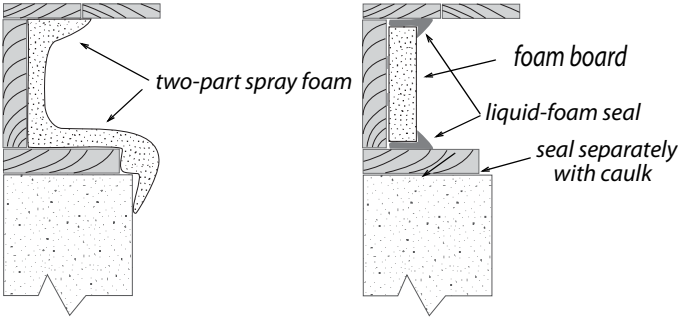

Foam-insulated rim joists: Installing foam insulation is the best way to insulate and air seal the rim joist.

Foam-insulated rim joists: Here 4 inches of EPS foam is sealed around its perimeter with one-part foam.

Don't use fiberglass batts to insulate between rim joists because air can move around the fiberglass, causing condensation and encouraging mold on the cold rim joist. If you use foam to insulate between the rim joists, use liquid foam sealant to seal around the edges of the rigid foam.

6.3.2 Installing Floor Insulation

SWS Details: 4.1301.1 Standard Floor System—Batt Installation, 4.1301.2 Standard Floor System—Loose Fill with Netting, 4.1301.3 Standard Floor System—Loose Fill with Rigid Barrier, 4.1301.4 Dense Pack Floor System with Rigid Barrier, 4.1301.7 Pier Construction Subfloor Insulation—Loose Fill with Rigid Barrier, 4.1301.8 Pier Construction Subfloor Installation—Dense Pack with Rigid Barrier, 4.1301.9 Open Floors Over Unconditioned Space and Cantilevered Floors, Floors Over Garages, Floors Over Unconditioned Crawl Spaces—Spray Polyurethane

The best way to insulate a floor cavity is to completely fill each joist cavity with fiberglass insulation. Blowing fiberglass insulation is the easiest way to achieve complete coverage because the blown fiberglass is able to surround obstructions and penetrations better than fiberglass batts. Avoid blown cellulose because of its weight, moisture absorption, and tendency to settle.

Before installing fiberglass floor insulation, make the following preparations.

- ✓ Seal air leaks in the floor from the living space or the crawl space or basement as opportunity allows.
- ✓ Seal and insulate ducts remaining in the crawl space or unconditioned basement.
- ✓ Identify electrical junction boxes, plumbing valves and drains before insulating and provide access to them.
- ✓ Insulate water lines in cold climates if they protrude below the insulation.

Blowing Floor Insulation

Many installers prefer to blow fiberglass insulation into the floor, rather than installing batts, to insulate more easily and effectively around obstacles. Cellulose is not recommended for blowing floors because of concerns about settling and moisture. Observe these specifications for blown-in floor insulation.

- ✓ Cover the entire under-floor surface with a vapor permeable supporting material such as: dust-free fabric insulation restraint or equivalent vapor-permeable and drainable material.
- ✓ Use wood strips to support the flexible or semi-flexible support material unless that material with its fasteners can support the floor insulation without sagging.

Blown floor insulation: This method works particularly well with floor trusses.

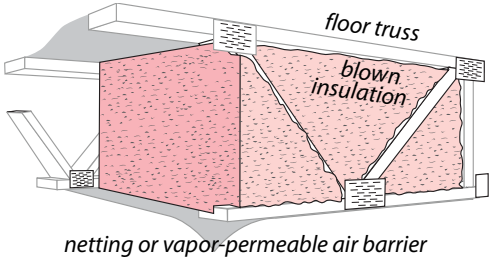

- ✓ Install rock wool or fiberglass blowing wool through V-shaped holes in the air barrier.
- ✓ Use a fill tube for installing the blown insulation. Insulation must travel no more than 12 inches from the end of the fill tube.
- ✓ Seal all penetrations in the air barrier with a tape, approved for sealing seams in the air-barrier material.

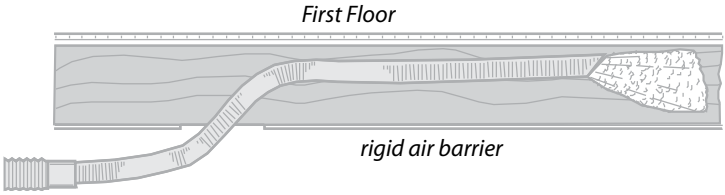

Blowing floor cavity: Uninsulated floor cavities can be blown with fiberglass or rock wool insulation, using a fill tube.

6.3.3 Installing Fiberglass Batt Floor Insulation

SWS Detail: 4.1301.1 Standard Floor System—Batt Installation, 4.1301.5 Cantilevered Floor—Batt Installation, 4.1301.6 Pier Construction Subfloor Insulation—Batt Installation with Rigid Barrier

Observe these material specifications for insulating under floors.

- ✓ Seal all significant air leaks through the floor before insulating the floor, using strong airtight materials.

- ✓ Choose unfaced batts for insulating floors.
- ✓ Install batts in continuous contact with the subfloor.
- ✓ Batt thickness must fill the complete depth of each cavity.
- ✓ Batts must be neatly installed, fitting tightly together at joints, fitting closely around obstructions, and filling all the space within the floor cavity.
- ✓ Crawl-space access doors, adjacent to a conditioned space, must be insulated to at least R-21 for horizontal openings and to at least R-15 for vertical openings.
- ✓ Crawl-space access doors must be effectively weather-stripped.

Installation Specifications for Batts in Floor Cavities

Batt insulation, installed in floors, must be supported by twine, wire, wood lath or other suitable material that keeps the insulation touching the floor. Friction-fit fiberglass batts supported by self-supporting wire insulation supports aren't good practice. Fasteners for floor insulation must resist gravity, the weight of insulation, and moisture condensation.

Use one of the following restrainer materials to keep the fiberglass batts in the floor cavity.

- Install standard wood lath ($^1/_4$ inch by 1 inch) or nominal one-inch lumber. Install the lath or lumber perpendicular to joists 12 inches apart for joists on 24-inch centers and 18 inches apart for joists on 16-inch centers.
- Install non-stretching polypropylene or polyester twine.
- Install copper or stainless steel wire with a minimum diameter of 0.04 inches or size 18 AWG.
- Install a rigid vapor-permeable air barrier, such as plywood.

Observe these requirements about installation and fasteners for the restrainers.

- Fasten lath or a rigid barrier with screws, nails, or power-driven staples. The fastener should penetrate the joist $^3/_4$ inch or more.
- Install twine or wire in a zig-zag pattern.
- Install power-driven staples over the twine or wire 12 inches apart for joists on 24-inch centers and 18 inches apart for joists on 16-inch centers. The staples must penetrate the wood joists by at least $^5/_8$ inch. Don't hand staple the restrainer.

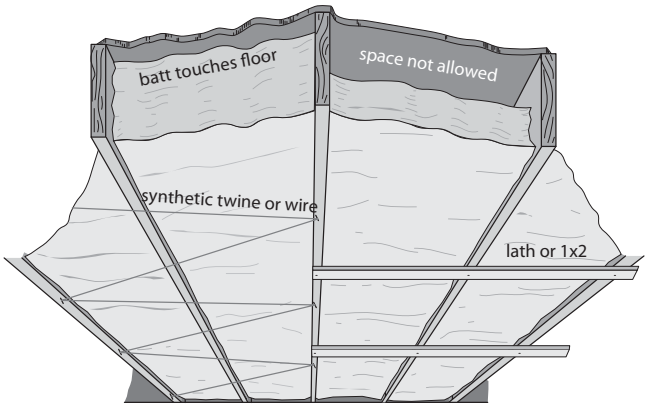

Floor insulating with batts: Use unfaced fiberglass batts, installed flush to the floor bottom, to insulate floors. The batt should fill the whole cavity if it is supported by lath or plastic twine underneath.

6.3.4 Crawl-Space Wall Insulation

SWS Detail: 4.1402.2 Basement Wall Insulation—No Groundwater Leakage, 4.1402.3 Basement Wall Insulation—Groundwater Leakage, 4.1402.1 Closed Crawl Spaces —Wall Insulation, 3.1402.2 Closed Crawl Spaces —Air Sealing Foundation Vents

Crawl-space foundation insulation is only worthwhile if you can seal the existing foundation vents. *See "Power-Ventilated Crawl Spaces" on page 378.*

Materials for Crawl-Space Insulation

Retrofit foundation insulation is usually installed on the inside of the foundation walls. Contractors undertake this retrofit for both energy savings and moisture control. Observe these insulation specifications for insulating foundation walls.

- Any foam foundation-wall insulation should be labeled ASTM E84 or UL 723 with a flame spread of less than 25 and smoke developed value of less than 450.
- Foam insulation must be protected by intumescent paint or another ignition barrier if not labeled ASTM E84 or UL 723.
- Local building officials may approve other foam materials based on product labels such as NFPA 286, FM 4880, UL 1040, or UL 1715.
- Unfaced mineral fiber insulation, greater than 5 pounds per cubic foot in density. Although expensive, mineral wool board is probably the best choice because it is vapor permeable and non combustible.
- Metal fasteners should carry a label of ASTM B 695 Class 55.

Foam-insulated foundation wall: A 20-gauge galvanized-steel termite shield and a 10 mil ground moisture barrier protect the wood floor against termites and other pests.

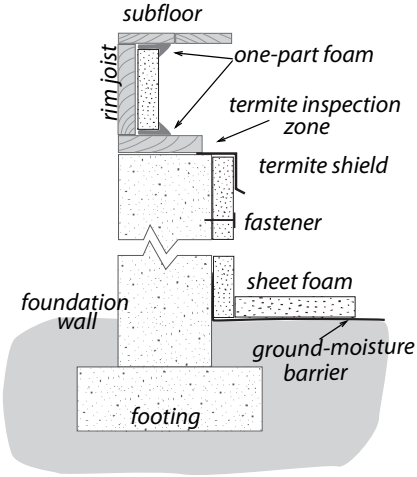

These insulation products might meet some of the above specifications.

- Foil-faced polyisocyanurate
- Expanded polystyrene foam board.
- Two-part high-density spray polyurethane foam with fire-retardant specifications as listed above. *See "Fire Protection for Foam Insulation" on page 104.*
- Unfaced rock wool board or fiberglass board.

Spray-foam-insulated foundation wall: Where termites aren't a threat, installers spray foam from the bottom of the foundation wall up to the top of the rim joist. If termites are a threat, leave a 2-inch inspection gap.

Safety and Durability

Consider the following issues when insulating foundation walls.

- ✓ Secure outdoor access hatches to foundation walls. If the foundation walls are insulated, also insulate any crawl-space access hatch with foam to the same R-value of the foundation wall.
- ✓ Remove obstacles and debris from crawl space before retrofit.
- ✓ If an open-combustion appliance is located in a crawl space, verify that outdoor combustion air is available to the appliance.
- ✓ When insulating crawl-space walls, consult the local building inspector about acceptable ventilation options if in doubt. *See "Crawl Space Ventilation" on page 377.*

In regions affected by termites, carpenter ants, and similar insects consider these suggestions.

- ✓ Leave a termite-inspection zone between the foundation and the rim-joist insulation.
- ✓ Apply moisture control measures and insulation with the application insecticide or baiting.
- ✓ Consult with experts to ensure that the insulation, air sealing materials, and moisture barrier don't provide a conduit for insects to infest the wood floor.

6.3.5 Basement Insulation

SWS Detail: 4.1402.2 Basement Wall Insulation—No Groundwater Leakage, 4.1402.3 Basement Wall Insulation—Groundwater Leakage

Basement wall is often installed poorly because of the installers' incomplete understanding about moisture problems.

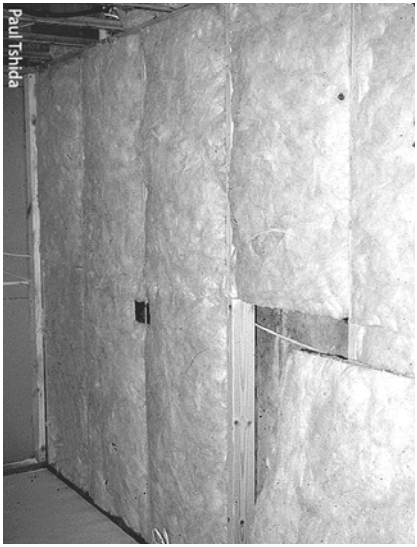

Frame-wall method: This method can be acceptable with meticulous air sealing to prevent basement air from circulating behind the wall. Exterior water drainage must be effective to prevent moisture problems in the basement.

Frame-Wall Insulation

The most common (although not the best) way to insulate basement walls, or any masonry wall, is to build a framed wall against the masonry wall and fill the wall with fiberglass batts. The frame wall is then covered with drywall.

Unfaced batts are the best choice of fiberglass insulation since they contain no vapor barrier to trap moisture. Moisture may escape from the wall in either direction: from outdoors in or indoors out.

With a framed wall, the installer often neglects to seal in areas where the wall is discontinuous, such as a mechanical room. Any area, such as an unfinished wall, open rim-joist area, or unsheeted ceiling, constitutes a very large air leak around the insulated wall. Avoid this problem by doing these procedures.

- ✓ Insulate the rim joist and air seal it.
- ✓ Build the frame walls.
- ✓ Wall off the entire basement. If a mechanical room or other area will not be insulated, install an airtight block at the wall's edge to prevent basement air from circulating behind the insulated wall.
- ✓ Don't install a vapor barrier on the interior face of the new basement wall. The wall must be able to dry toward indoors or to the outdoors.
- ✓ Install drywall in an airtight manner on the walls and ceiling by applying sealant to the back or each sheet around its perimeter.

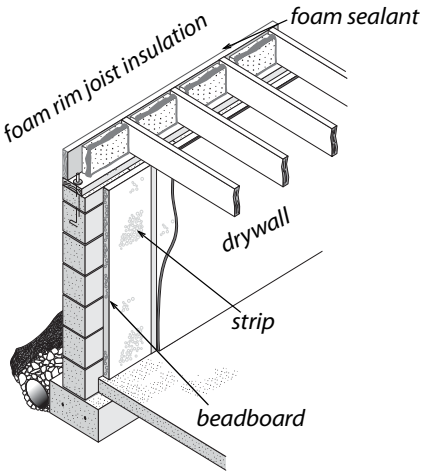

2-inch foam board with plywood strips: Installers fasten foam to the foundation wall using built-in strips. They then attach the drywall to the strips in the foam.

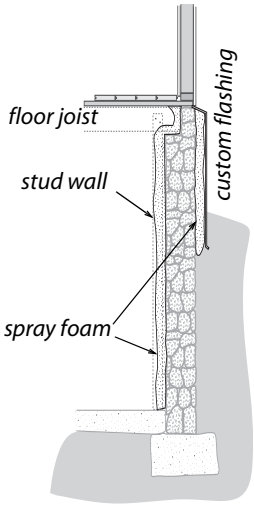

2-part foam sprayed on rubble masonry: Installers insulate rubble masonry walls on the interior or exterior with sprayed plastic foam. On the interior, they cover the foam with drywall.

Stripped Foam Basement Insulation

Polystyrene foam is an excellent choice for insulating smooth basement walls.

You can order either expanded polystyrene or extruded polystyrene equipped with grooves for fastening strips, spaced apart on 16-inch or 24-inch centers. Stripped foam sheets may be the easiest and most satisfactory way to insulate below-grade basement walls. Do these procedures to install 2-inch stripped foam on a foundation wall.

- ✓ Apply walnut-sized globs of adhesive to the back of the sheet on one-foot centers. Use a foam-compatible adhesive and follow the instructions on the container.
- ✓ Install at least two concrete screws or two powder-driven nails in each strip, 24 inches from the bottom and top.

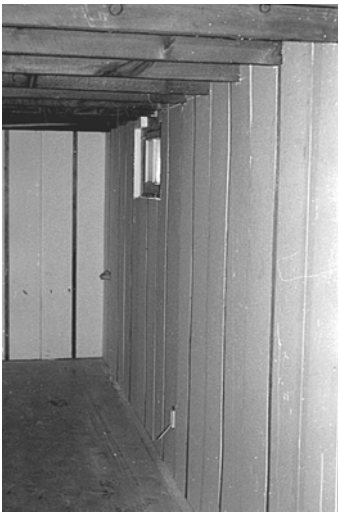

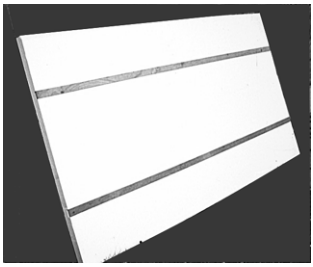

Installing stripped foam: Installers glue and screw the foam sheets to the masonry wall. Then they glue drywall to the foam and screw the drywall to the strips.

- ✓ Wherever an electrical box is needed, install it between two sheets if possible because it's easier to run the wire between sheets than toward the center of a sheet. Install an electrical box backed by a piece of wood that sets the box out from the foam a half inch. Use construction adhesive and a concrete screw to fasten the box in place.
- ✓ Leave a half-inch gap at the bottom of the polystyrene sheets to run wire. Run the wire along the floor and up into the boxes. If flooding is a possibility, run the wire at the ceiling and down into boxes on the wall.
- ✓ Seal the bottom gap and other gaps in the foam sheeting with one-part foam.
- ✓ Glue the drywall using the same adhesive and pattern. Screw the drywall to each wooden strip with one-inch drywall screws.

Exterior Foam Foundation Insulation

If installed at the exterior, as during new construction, use durable water-resistant insulation such as blue or pink extruded polystyrene or high-density (2 pcf) expanded polystyrene. For portions that are exposed above ground level and six inches

below ground, you'll need to provide mechanical and moisture protection such as sheet metal or fiberglass panels. For areas more than 6 inches below grade, there are asphalt-based sealants for the foam that are applied with a paint roller.

6.4 SWS Alignment

Field Guide Topic	SWS Detail
Thermal-Boundary Decisions: Floor or Foundation Pg. 183	
Air Sealing Foundations and Floors Pg. 185	
Plumbing Penetrations Pg. 185	3.1001.1 Penetrations and Chases, 3.1001.2 Chase Capping
Stairways to Unconditioned Areas Pg. 186	3.1002.1 Interior with Sloped Ceiling, 3.1002.2 Stairwell to Attic—Door at Bottom with No Ceiling Above, 3.1002.3 Stairwell to Attic—Door at Top with Finished Ceiling Above
Incomplete Finished Basements Pg. 189	
Cantilevered Floors Pg. 189	
Preparing for Foundation or Floor Insulation Pg. 190	4.1402.2 Basement Wall Insulation—No Groundwater Leakage, 4.1402.3 Basement Wall Insulation—Groundwater Leakage

Field Guide Topic	SWS Detail
Rim-Joist Insulation and Air-Sealing Pg. 191	4.1401.1 Band/Rim Joists—Spray Polyurethane Foam (SPF) Installation
Installing Floor Insulation Pg. 192	4.1301.1 Standard Floor System—Batt Installation, 4.1301.2 Standard Floor System—Loose Fill with Netting, 4.1301.3 Standard Floor System—Loose Fill with Rigid Barrier, 4.1301.4 Dense Pack Floor System with Rigid Barrier, 4.1301.7 Pier Construction Subfloor Insulation—Loose Fill with Rigid Barrier, 4.1301.8 Pier Construction Subfloor Installation—Dense Pack with Rigid Barrier, 4.1301.9 Open Floors Over Unconditioned Space and Cantilevered Floors, Floors Over Garages, Floors Over Unconditioned Crawl Spaces—Spray Polyurethane
Installing Fiberglass Batt Floor Insulation Pg. 194	4.1301.1 Standard Floor System—Batt Installation, 4.1301.5 Cantilevered Floor—Batt Installation, 4.1301.6 Pier Construction Subfloor Insulation—Batt Installation with Rigid Barrier

Field Guide Topic	SWS Detail
Crawl-Space Wall Insulation Pg. 196	4.1402.2 Basement Wall Insulation—No Groundwater Leakage 4.1402.3 Basement Wall Insulation—Groundwater Leakage 4.1402.1 Closed Crawl Spaces — Wall Insulation, 3.1402.2 Closed Crawl Spaces — Air Sealing Foundation Vents
Basement Insulation Pg. 199	4.1402.2 Basement Wall Insulation—No Groundwater Leakage, 4.1402.3 Basement Wall Insulation—Groundwater Leakage

CHAPTER 7: WINDOWS AND DOORS

This chapter presents specifications and procedures for improving the airtightness and thermal resistance of windows and doors.

Use lead-safe weatherization methods for all tasks relating to window and door weatherization, repair, and replacement. *See "EPA RRP Requirements" on page 40.*

7.1 STORM WINDOWS

A storm window is an additional window installed outside or inside the primary window.

7.1.1 Exterior Aluminum Storm Windows

Exterior storm windows can save energy and preserve old worn primary windows from destructive weathering. You can attach exterior operable storm windows to the blind stop or exterior window casing of a double-hung window. Or, attach a fixed storm to any flat surface of a window frame or sash if the window is fixed or if a movable sash can support the extra weight.

Metal exterior storm windows are the best choice if they are well designed and installed properly.

- Choose operable storm windows to install on operable windows. Choose fixed storm windows to install on fixed windows or on sashes that open along with the movable primary window.
- If operable, make sure that the storm window opens and closes to allow the maximum amount of ventilation and egress area.
- Measure the storm-window dimensions according to where you'll attach the storm: blind stop, window casing, or sash.

- Storm-window frames should have sturdy corners so they don't rack out-of-square during transport and installation.
- Sashes must fit tightly in their frames.
- The gasket sealing the glass should surround the glass's edge.
- Consider selecting a hard-coat low-e glass for the storm window, which should face the primary window to protect the low-e coating.
- The storm window should be sized accurately and should fit tightly in the opening.
- The storm window's sashes should be removable from indoors for cleaning.

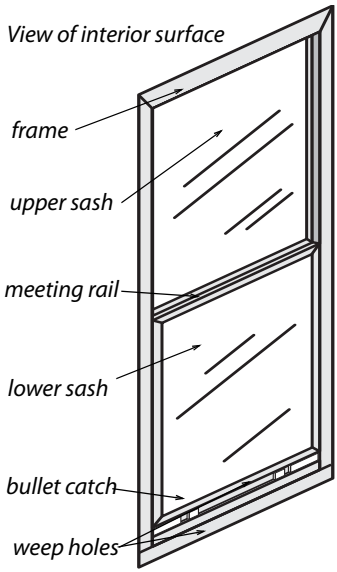

Aluminum exterior storm windows: They protect the primary window and add about an R-1 to the window assembly.

Installation of Exterior Storm Windows

Follow these guidelines when installing storm windows.

✓ Seal storm windows around the frame at time of installation with sealant tape or caulk.

- ✓ Don't allow the tape or caulk to interfere with the weep holes at the bottom of the frame. If weep holes aren't manufactured into new storm window, drill weep holes or leave at least 2 two-inch spaces in sealant to allow water on the sill to escape.
- ✓ Don't allow storm windows to restrict emergency egress or ventilation through movable windows.

See also "Mobile home double window" on page 446.

7.1.2 Interior Storm Windows

SWS Details:3.1201.6 Interior Storm Windows

Interior storm windows are usually more airtight than exterior storm windows because they must be airtight to avoid condensation and icing on the primary window during winter. Interior storm windows are usually a metal or plastic frame enclosing some type of plastic glazing.

Consider these specifications when selecting interior storm windows.

- Interior storm windows should have an airtight edge seal to prevent warm moist air from passing by the interior storm window and condensing or icing the interior of the glass on the primary window.
- Interior storm windows should be easily removable for egress and storage.
- The home should have a safe place to store the storm windows seasonally.
- Consider using low-e glass or plastic for glazing to increase thermal resistance.

7.2 Window Repair and Air Leakage Reduction

With the exception of broken glass or missing window panes, windows aren't often the major source of air leakage in an existing home.

Window weatherstripping may solve comfort problems around windows, even though it may not be cost-effective. Avoid expensive or time-consuming window repair measures that are implemented to solve minor comfort complaints if the weatherization budget is limited.

7.2.1 Double-Hung Window Weatherization

SWS Details: 3.1202.1 Fixed Frame with Wood Sash—Older House, 3.1201.2 Single-Unit Window and Fixed Frame with Wood Sash, 3.1201.1 Double-Hung Wood Windows

Re-glazing window sashes in a quality manner is time consuming. This task is best accomplished as part of a comprehensive window rehabilitation project. Re-glazing wood windows may not be a durable repair without thorough scraping, priming, and painting. Use lead-safe work practices when working on windows. *See page 54.*

Repair measures may include the following.

- ✓ Replace missing or broken glass. Use glazing compound and glazier points when replacing glass in old windows.
- ✓ Caulk the window frame where appropriate to prevent air leakage, condensation, and rain leakage. Use sealants with adhesion and joint-movement characteristics appropriate for both the window frame and the building materials surrounding the window.
- ✓ Replace missing or severely deteriorated window frame components.

- ✓ Fill damaged wood with epoxy, before priming and painting.
- ✓ Adjust window stops if gaps exist between the stop and jamb. Ensure that the window operates smoothly following adjustment.
- ✓ Weatherstrip large gaps between the sash and the sill or stops. Weatherstrip the meeting rails if needed.
- ✓ Replace or repair missing or non-functional top and side sash locks, hinges, or other hardware if this significantly reduces air leakage.

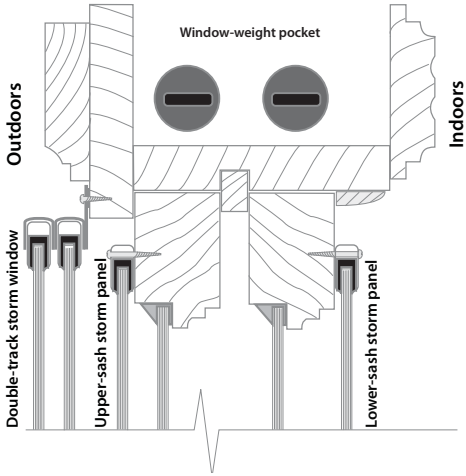

Optimized double-hung window: An exterior aluminum storm window plus storm window panels on the window sashes create triple glazing in this double-hung window.

7.2.2 Weatherstripping Double-Hung Windows

SWS Detail: 3.1201.1 Double-Hung Wood Windows

Window weatherstripping is mainly a comfort retrofit and not a high weatherization priority.

Paint is the primary obstacle when weatherstripping double-hung windows. Often the upper sash has slipped down, and is locked in place by layers of paint, producing a leaking gap between the meeting rails of the upper and lower sashes.

- ✓ To make the meeting rails meet again, either break the paint seal and push the upper sash up, or cut the bottom of the lower sash off to bring it down.

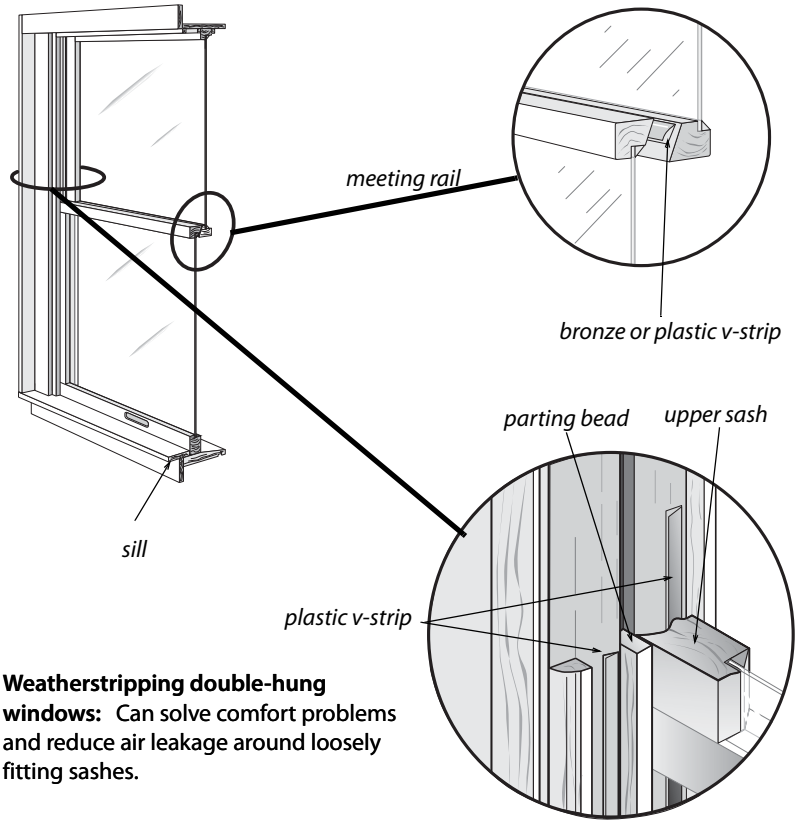

Weatherstripping double-hung windows: Can solve comfort problems and reduce air leakage around loosely fitting sashes.

- ✓ To lift the upper sash, cut the paint around its inside and outside perimeter. Use leverage or a small hydraulic jack to lift the sash. Jack only at the corners of the sash. Lifting in the middle can break the glass.
- ✓ Block, screw, or nail the repositioned upper sash into place.
- ✓ To weatherstrip the window, remove the lower sash. Cut the paint where the window stop meets the jamb so the paint doesn't pop off in large flakes as you pry the stop off.

Removing one stop is sufficient to remove the bottom sash.

- ✓ Scrape excess paint from the sashes and the window sill.
- ✓ Apply vinyl V-strip to the side jambs, and bronze V-strip to the meeting rail on the top sash. The point of the bronze V goes skyward. The weatherstrip is caulked on its back side and stapled in place, as shown in the illustration.

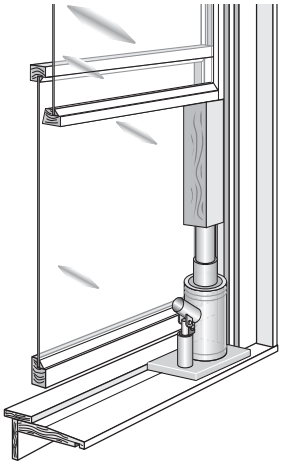

Lifting an upper window sash: First cut paint away from around the sash inside and outside. Then lift with leverage or a jack.

7.3 Window Replacement Specifications

The purpose of these specifications is to guide the selection and installation of replacement windows. Improper window installation can cause water leakage, air leakage, and noise leakage.

Existing window openings may have moisture damage and air leakage. Repair these conditions before or during window replacement.

Included here are specifications for two special window safety considerations.

1. Windows in high risk areas, such as around doors and walkways, must have safety glass.

2. Some bedroom windows function as a fire escape (egress). Recognize and accommodate this egress function.

7.3.1 Window Energy Specifications

Installing new windows incurs a large labor expense so they should be as energy-efficient as budget allows.

1. Replacement windows must have a U-factor less than or equal to what is required by State standards. Lower is better, especially in cold climates.
2. Replacement windows facing east or west in air conditioned homes should have a solar heat-gain coefficient (SHGC) that is equal to or less than what is required by State standards. Lower is better in hot climates.

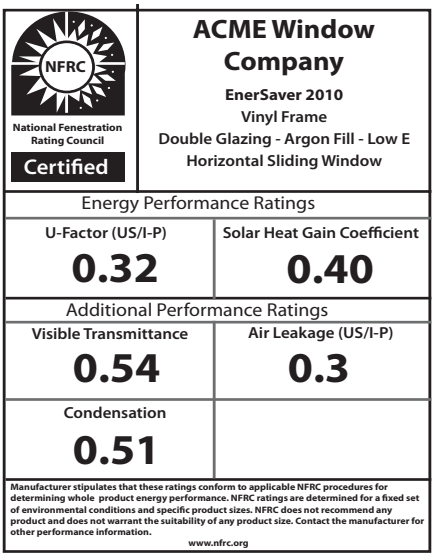

Example NFRC label: The key selection criteria for window shopping is displayed on the NFRC label.

7.3.2 Removing Old Windows

Remove existing windows without damaging the home's interior finish, siding, exterior trim, or the water-resistive barrier (WRB) if possible.

1. Protect the interior of the home from construction debris. *See "EPA RRP Requirements" on page 40.*
2. Remove window sashes, jambs, or siding, depending on the window-replacement method chosen.
3. Repair moisture damage to the rough opening before installing the new window.

7.3.3 Installing Replacement Windows

SWS Details: 3.1203.2 Single-Unit Window, Mounted on Rough Opening—Newer House, 3.1203.1 Fixed Frame with Wood Sash—Older House, 3.1203.1 Replacement Window in Existing Window Frame

The most important considerations for installing new windows is that the window installation is watertight and airtight.

Water leakage deteriorates building components around the window. To prevent water leakage in frame buildings, the window must be integrated, if possible into the home's water resistive barrier (WRB).

Window-frame types: It's important to order the right window-frame type for the method of window installation you plan to use.

7.3.4 Replacing Nailing-Fin Windows

SWS Detail: 3.1203.2 Single-Unit Window, Mounted on Rough Opening—Newer House, 3.1203.1 Fixed Frame with Wood Sash—Older House

Install replacement windows with nailing fins in the rough opening after removing the existing window frame and exterior trim. Fasten the nailing fins directly to the house's sheathing or framing, but support the window's weight on the sill with or without shims before fastening the window to the building.

Water-Resistive Barrier (WRB): Designers and builders assume that some rain water penetrates through the siding. The WRB is the building's last defense against water. House wrap and asphalt felt are the most common WRBs. Window replacements that expose the home's WRB must incorporate the WRB in the window installation. Install a sill pan below the window and flashing on the side fins. Use flashing to connect the window opening to the WRB so water that penetrates the siding, trim, or window exits the building by way of the WRB.

Windows are exposed to wind and rain. Install replacement windows so water that penetrates the siding or trim drains to the outdoors. If water leaks underneath the existing WRB or the new flashing, the water eventually damages the building. With proper flashing, the fins and flashing create a drainage system that drains water to the outdoors rather than relying on caulked siding and trim to prevent rain water from penetrating the building's surface.

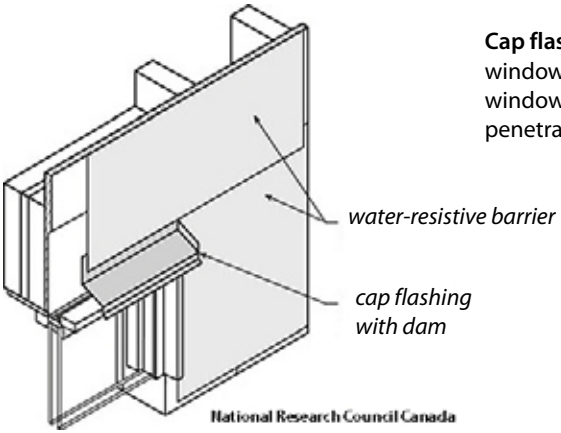

Cap flashing: Cap flashing at the window's head protects the window from rain water penetration.

Follow these steps to install a nailing-fin window in the rough opening.

1. At the sill, insert the flashing underneath the existing siding, over top of existing building paper, and under the bottom nailing fin of the window.
2. Use flat shims to provide a level surface and support under the vertical structural members of the new window frame. Don't allow the fins to support the window's weight.
3. Use fasteners with heads wide enough in diameter to span the holes or slots in the window fin.
4. Avoid over-driving the fasteners or otherwise deforming the window fin.
5. Flash the window around its perimeter with 15-pound felt, house wrap, or a peel-and-stick membrane.
   a. Flashing procedures may vary. However, always install flashing materials to overlap like shingles.
   b. Insert the new building paper or flashing underneath the existing siding and underneath existing building paper on the sides and top of the window opening.

6. Windows that are exposed to wind-driven rain or without overhangs above them or without WRB integration should have a rigid cap flashing (also called head flashing) to prevent rainwater from draining onto the window. The cap flashing should divert water away from vertical joints bordering the window with an overhang or dam.
7. Tuck the cap flashing up behind the WRB or exterior siding. Metal cap flashing must have downward bending lip of at least $^1/_4$ inch on the front and ends.
8. Thoroughly caulk all filler and trim pieces surrounding the replacement window.

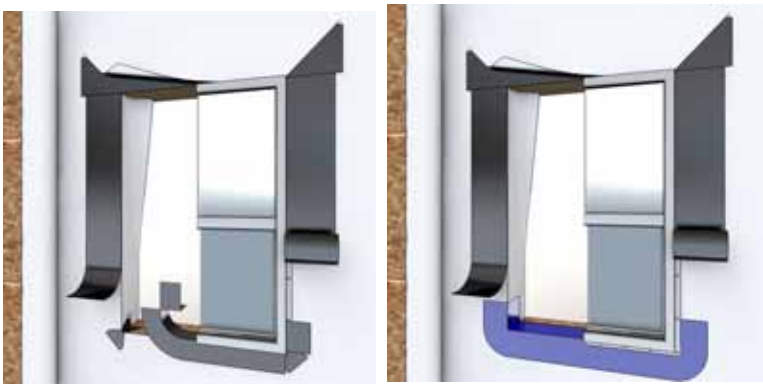

Flashing nail-fin windows: Installers place the window on and over the sill flashing. The side and top flashing cover the fastening fin. The two methods shown here are: using a flexible membrane (right) and using a bowtie-shaped flashing to underlay the corners when using a standard membrane.

7.3.5 Block-Frame or Finless Windows

SWS Detail: 3.1203.1 Fixed Frame with Wood Sash—Older House

Contractors install windows using a block-frame or finless installation when they can't remove the existing window frame

or in a masonry window opening. Block-frame windows rely on caulk or rigid flashing to create a weatherproof seal around the window perimeter. Take care when installing caulk so that it is durable and effective for as long as possible.

Comply with the following requirements when installing block-frame or finless windows.

1. Block-frame or finless windows may require a sufficiently wide gap between the new window and the existing window frame or masonry opening to allow for the following.

   a. Allowing for a slightly out-of-square opening.

   b. Leveling the window.

   c. Insulating the gap with foam.

2. Access the window-weight cavities, remove the weights, and fill the cavities with insulation, and seal the cavities.

3. Protect the existing sill with a metal or plastic sill pan or rigid sill flashing if necessary for drainage and to protect the existing sill that protrudes from the exterior wall. Or, install a new sill as part of the window replacement.

4. Support block-frame or finless windows under their main vertical supports with shims that level the window.

   a. Use flat shims for support if the sill surface is flat.

   b. Use tapered shims or a sill angle for support if the sill surface is sloping.

5. Windows without fins must be secured to the rough opening within 4 inches of each side corner and a minimum 12 inches on center along the remainder of the frame with one of these fastening methods.

a. Screws fastened through the window frame. Use screws that are designed for fastening block-frame windows if available.

b. Jamb clips or plates that are fastened first to the window and then to the opening in separate steps.

6. Fill any gaps over $^3/_8$ inch that are between the exterior siding and the block-frame window. Install backer rod in all exterior or interior voids over $^3/_8$ inch in depth or width before caulking.

7. If possible, flash block-frame windows between the opening and the replacement-window frame and extend the flashing out far enough to slip under or into the siding.

   a. Tuck the flashing up behind the exterior siding at least 1 inch.

   b. Sill and cap flashing should have a downward bending lip of at least $^1/_4$ inch on the front that sheds water away from the building.

Block frame window installation: Block-frame windows don't have a fin. Installers use plates or screws to fasten the window to its opening.

7.3.6 Flush-Fin Window Replacement

Flush-frame windows are replacement windows that fasten to the window opening and mount directly over the flat siding surrounding the window opening. Replace windows in stucco walls using windows with flush fins, also called stucco fins, that have no nail holes. Flush-fin windows work well for any window opening with a flat water-resistant finished surface surrounding the window opening.

This flush-fin window-replacement technique is similar to block-frame window installation.

1. Support the replacement window on the existing sill with one of the following materials.
   a. A flat or tapered continuous wood support.
   b. Flat shims under the window's main vertical supports.
   c. Tapered shims under the window's main vertical supports if the sill is sloping.
2. Apply a sealant that remains flexible to the back of the flush fin of the replacement window in order to seal it to the surface of the exterior wall. Interrupt the caulking at the bottom fin for one inch on each side of the window's weep holes.
3. Fasten the flush-fin window to the window opening by driving screws through the replacement window's frame.

Flush frame window: Flush frame windows have the fin at the exterior surface of the window and seal to a flat exterior surface like stucco.

7.4 Window Safety Specifications

Windows have special requirements for breakage-resistance in areas that are prone to glass breakage, and for fire escape in bedrooms.

7.4.1 Windows Requiring Safety Glass

Safety glass is required in locations that the IRC 2012 considers hazardous to the building's occupants. Safety glass must be either laminated glass, tempered glass, organic coated glass, or annealed glass bearing a permanent label identifying it as safety glass, manufactured in compliance with CPSC 16 CFR 1201 or ANSI Z97.1.

Instead of safety glazing, glazed panels may have a protective bar installed on the accessible sides of the glazing 34 to 38 inches above the floor. The bar must be capable of withstanding a horizontal load of 50 pounds per linear foot without contacting the glass and be a minimum of $1^1/_2$ inches in diameter.

Safety glass or a protective bar is required in the following hazardous locations.

- ✓ Glazing wider than 3 inches in entrance doors.
- ✓ Glazing in fixed and sliding panels of sliding doors and panels in swinging doors.

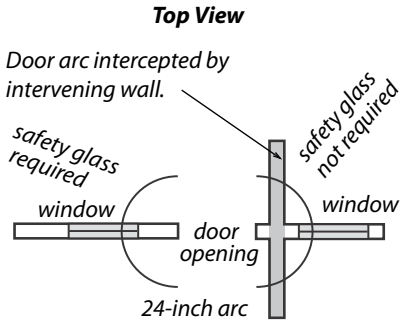

Safety glass around doors: A window near a door must be glazed with safety glass when the window is less then 24 inches from the door and less than 60 inches from the floor.

- ✓ Glazing in fixed or operable panels adjacent to a door where the nearest exposed edge of the glazing is within a 24-inch arc of the vertical edge of the door in a closed position and where the bottom edge of the glazing is less than 60-inches above the floor or walking surface. Exception: If there is an intervening wall or permanent barrier between the door and the glazing, safety glass isn't required.
- ✓ Glazing adjacent to the landing of the bottom of a stairway where the glazing is less than 36 inches above the landing and within 60 inches horizontally of the bottom tread.
- ✓ Glazing with a bottom exposed edge that is less than 36 inches above the walkway surface of stairways, landings, and ramps.
- ✓ Glazing in any portion of a building wall enclosing showers, hot tubs, whirlpools, saunas, steam rooms, and bathtubs where the bottom exposed edge is less than 5 feet above a standing surface or drain inlet.

Glazing in an individual fixed or operable panel that meets all of the following conditions must also have safety glass:

1. An exposed area of an individual pane greater than 9 square feet, and
2. An exposed bottom edge less than 18 inches above the floor.
3. An exposed top edge greater than 36 inches above the floor.
4. One or more walkways within 36 inches horizontally of the glazing.

7.4.2 Fire Egress Windows

Windows are the designated fire escape for bedrooms and should offer a minimum opening for a person's escape. If the window installation requires a code-approved egress window, observe these specifications.

1. Each bedroom must have one egress window.
2. Egress windows must provide an opening that is at least 20 inches wide and at least 24 inches high.
3. Egress windows must provide an opening with a clear area of at least 5.7 square feet except for below-grade windows, which must have at least 5.0 square feet of opening.
4. The finished sill of the egress window must be no higher off the floor than 44 inches.
5. You may install security bars, screens, or covers over egress windows as long as these security devices are easily removable from indoors.

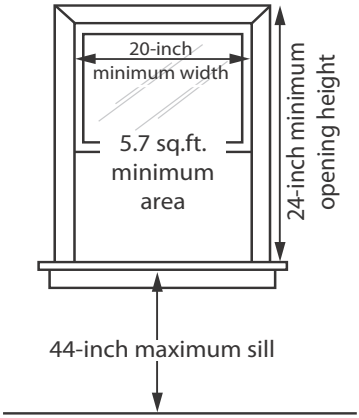

Egress windows: Windows for fire escape must be large enough and a convenient distance from the floor.

7.5 Door Replacement and Improvement

Exterior doors suffer a lot of wear because they function as entrances to buildings. Doors need adjustment or repair when they're malfunctioning or damaged.

Install flashing around doorways according to the specifications in *"Installing Replacement Windows" on page 215*.

7.5.1 Door Replacement

Door replacement may be completed as an efficiency measure if the cost is justified. Use RRP & LSW methods to ensure occupants and workers are not placed at risk during door repair measures. *See "EPA RRP Requirements" on page 40.*

Observe the following standards when replacing exterior doors.

- ✓ Replace the door using an exterior-grade insulated door-blank or a pre-hung steel insulated door, unless the door opening isn't standard width or height.
- ✓ Don't replace an exterior panel door with another panel door.
- ✓ All exterior replacement doors must have three hinges.

7.5.2 Door Adjustment and Repair

SWS Detail: 3.1201.3 Exterior Doors

Door operation affects building energy-efficiency, security and durability, so doors are sometimes an important weatherization priority. A leaky door may be an important comfort problem, and weatherstripping it can be a high-value energy conservation measure. Perform all door adjustment and repair in a lead-safe manner. *See "EPA RRP Requirements" on page 40.*

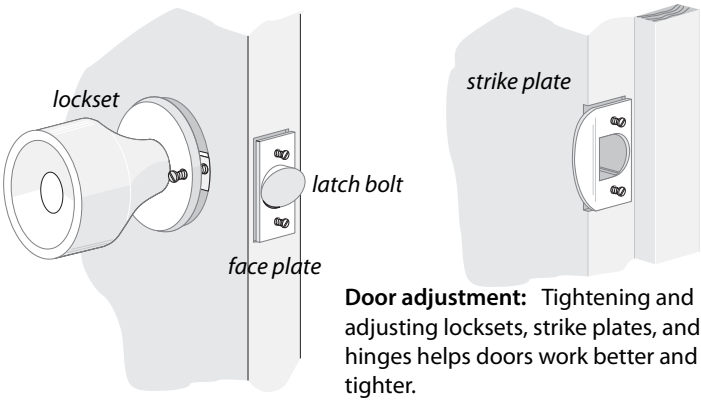

Door adjustment: Tightening and adjusting locksets, strike plates, and hinges helps doors work better and seal tighter.

Evaluating Exterior Doors

Before weatherstripping a door, evaluate the door's operation.

- Does the door bind or scrape against its jambs, indicating a need for hinge adjustment?
- Does the door close tightly and evenly against its stops or is there an uneven space between the door and stop when the door is latched?
- Can you move the latched door back and forth against its stops, indicating a need for latch adjustment?
- Can you move the open door up and down, indicating loose hinges?

Fixing Binding Doors

You can adjust binding doors by moving the door within its opening. Moving the top and middle hinges in, or moving the bottom and middle hinges out moves the door's top latch-side corner upward and back toward the top hinge. Moving the top and middle hinges out drops the door down and moves the door away from the top hinge.

- If the hinges are loose, tighten the hinges and add longer screws if necessary. Longer screws can even move the door

jamb a little, when necessary, if the screws penetrate the stud next to the door.

- If the gaps at the top latch-side corner are uneven, rotate the door in its opening by adjusting the hinges. Chisel the hinge mortises a little deeper or install cardboard shims between the hinges and door or jamb to move the door to create an even space around the door.
- If the house has settled and the opening is out-of-square, plane or power-sand the door so it closes without rubbing or binding against its jambs.
- If paint has built up and reduced the door's operating gap, plane or sand off the excess paint. Planing and sanding are a last resort, so try the previous suggestions first.

Adjusting Latches and Stops

If a door won't latch, inspect the door stops and weatherstripping to see if they're binding. If there's no obvious problem with the weatherstrip or stops, move the strike plate out slightly or use a file to remove a little metal from the strike plate to allow the latch to seat itself. The strike plate is mortised into the door frame that receives the latch.

- ✓ Tighten loose door knobs, face plates, and strike plates.
- ✓ If the door is warped and doesn't fit well against its stops, adjust the stops by moving them against the door or planing them so door closes snugly against its stops.
- ✓ Move the strike plate to hold the door evenly against its stops if necessary. Use toothpicks to fill widened screw holes. Use longer screws if you have to move the strike plate.

Weatherstripping Doors

Consider these suggestions when weatherstripping doors.

- ✓ Use a durable stop-mounted or jamb-mounted weatherstrip to seal the door's side jambs and head jamb.
- ✓ Seal the back of the weatherstrip to prevent air from leaking behind the weatherstrip.
- ✓ Install thresholds and door sweeps if needed to prevent air leakage at the door bottom. These air seals should not bind the door. Thresholds should be caulked underneath and on both sides of the door sill.
- ✓ Install corner seals to close the gaps at the bottom corners of the door jambs.

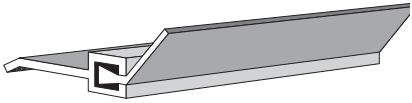

Vinyl flap weatherstrip is particularly flexible, allowing the door to remain sealed with seasonal movements of the door

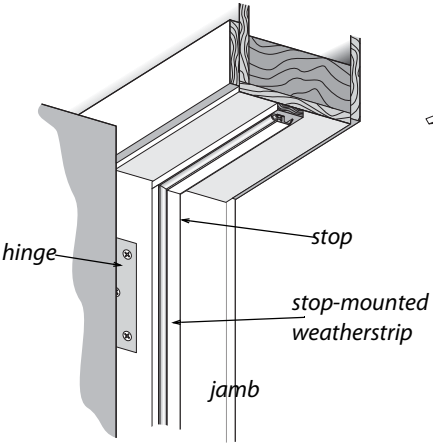

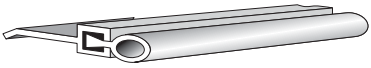

Silicone bulb weatherstrip is much more flexible than vinyl bulb and therefore seals better.

Bronze v-strip mounts on the door jamb and is very durable.

Weatherstripping doors: The three weatherstrips shown should be flexible enough to move with the door seasonally and maintain their seal as the door moves seasonally.

- ✓ Seal gaps between the stop and jamb with caulk.
- ✓ Install a door sweep if you don't install a door bottom.
- ✓ The door must operate smoothly after you weatherstrip it.

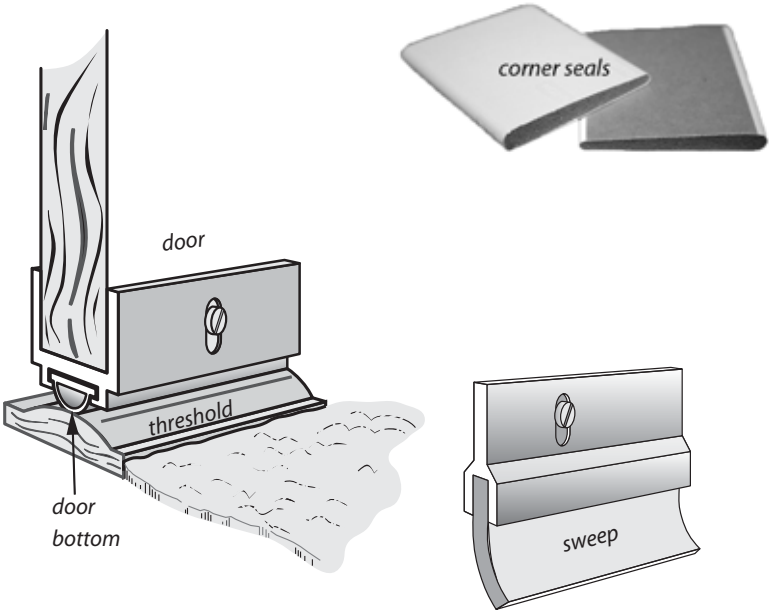

Weatherstripping at the door bottom: A threshold and door bottom are the ideal bottom seal for a door. The threshold and door bottom must be adjusted to seal but not bind. Corner seals in the bottom complete a quality door-weatherstripping job.

7.6 SWS Alignment

Field Guide Topic	SWS Detail
Storm Windows Pg. 207	
Exterior Aluminum Storm Windows Pg. 207	
Interior Storm Windows Pg. 209	3.1201.6 Interior Storm Windows

Field Guide Topic	SWS Detail
Window Repair and Air Leakage Reduction Pg. 210	
Double-Hung Window Weatherization Pg. 210	3.1202.1 Fixed Frame with Wood Sash—Older House, 3.1201.2 Single-Unit Window and Fixed Frame with Wood Sash, 3.1201.1 Double-Hung Wood Windows
Weatherstripping Double-Hung Windows Pg. 211	3.1201.1 Double-Hung Wood Windows
Window Replacement Specifications Pg. 213	
Window Energy Specifications Pg. 214	
Removing Old Windows Pg. 215	
Installing Replacement Windows Pg. 215	3.1203.2 Single-Unit Window, Mounted on Rough Opening—Newer House, 3.1203.1 Fixed Frame with Wood Sash—Older House, 3.1203.1 Replacement Window in Existing Window Frame
Replacing Nailing-Fin Windows Pg. 216	3.1203.2 Single-Unit Window, Mounted on Rough Opening—Newer House, 3.1203.1 Fixed Frame with Wood Sash—Older House
Block-Frame or Finless Windows Pg. 218	3.1203.1 Fixed Frame with Wood Sash—Older House
Flush-Fin Window Replacement Pg. 221	

Field Guide Topic	SWS Detail
Window Safety Specifications Pg. 222	
Windows Requiring Safety Glass Pg. 222	
Fire Egress Windows Pg. 225	
Door Replacement and Improvement Pg. 226	
Door Replacement Pg. 226	
Door Adjustment and Repair Pg. 226	SWS Detail: 3.1201.3 Exterior Doors

Chapter 8: Heating and Cooling Systems

This chapter discusses safety and energy-efficiency improvements to heating and cooling systems. It is divided into these main sections.

1. Essential combustion-safety testing
2. Heating-system replacement:
3. Servicing gas and oil heating systems
4. Combustion venting
5. Heating distribution systems
6. Air-conditioning systems

The SWS requires that weatherization agencies perform a combustion-safety evaluation as part of each weatherization work scope. This evaluation is the chapter's first topic. The chapters other topics are procedures and requirements related to cost-effective ECMs, such as tune-ups and equipment replacement. All installation and adjustments of heating systems must be completed by licensed heating contractors.

8.1 Combustion-Safety Evaluation

SWS Detail: 2.0105.1 Combustion Worker Safety, 5.3003.14 Combustion Analysis of Gas-Fired Appliances (LP and Natural Gas), 5.3003.2 Combustion Analysis of Oil-Fired Appliances

At a minimum, evaluate the combustion safety at the weatherization job's completion.

8.1.1 Combustion-Safety Observations

Make the following observations before testing to help you determine the likelihood of carbon monoxide (CO) and spillage problems.

- ✓ Recognize soot near the draft diverter, barometric damper, or burner of a combustion appliance as a sign that the appliance has produced CO and spilled combustion gases.
- ✓ Recognize that rust in a chimney or vent connector may also indicate spillage.
- ✓ Look for irregularities and flaws in the venting system.
- ✓ Specify that workers seal all accessible return-duct leaks attached to combustion furnaces.
- ✓ Verify that the home has a working CO alarm. If the home has no working smoke alarm in addition to no CO alarm, install a combination CO-smoke alarm, or separate CO and smoke alarms.

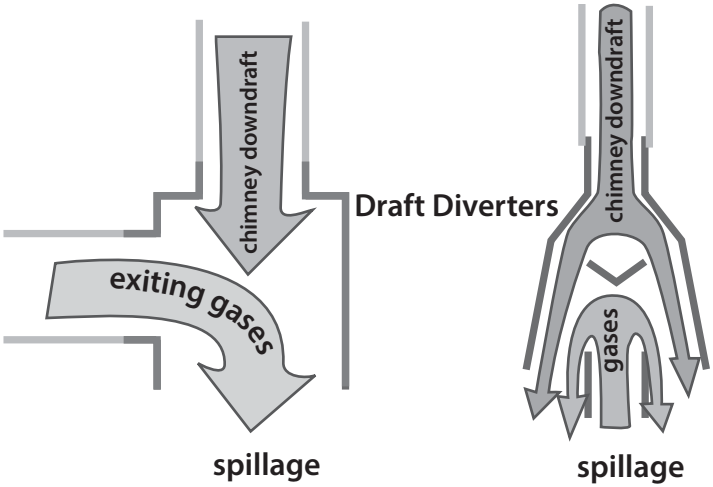

Draft-diverter spillage: Look for soot or corrosion near the draft diverter and also near the burner caused by spillage.

8.1.2 Leak-Testing Gas Piping

Natural gas and propane piping systems may leak at their joints and fittings. Find gas leaks with an electronic combustible-gas detector, also called a gas sniffer. A gas sniffer finds significant gas leaks if used correctly. Remember that natural gas rises from a leak and propane falls, so position the sensor accordingly.

- ✓ Sniff all valves and joints with the gas sniffer.
- ✓ Accurately locate leaks using a noncorrosive bubbling liquid, designed for finding gas leaks.
- ✓ Repair all gas leaks.
- ✓ Replace kinked or corroded flexible gas connectors.
- ✓ Replace flexible gas lines manufactured before 1973. The line's manufacture date is stamped on a date ring attached to the flexible gas line. If a date ring isn't present, and you believe the gas line predates 1973, then replace the flexible gas line.

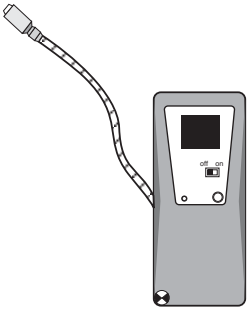

Gas sniffer: Use this device to detect the presence of combustible gases around fittings.

8.1.3 Carbon Monoxide (CO) Testing

SWS Detail: 2.0105.1 Combustion Worker Safety, 2.0301.2 Carbon Monoxide Alarm or Monitor

CO testing is essential for evaluating the safety of combustion and venting. Measure CO in the vent of every combustion appli-

ance you inspect and service. Measure CO in ambient air in both the home and CAZ as part of inspection and testing of combustion appliances.

Vent Testing for CO

Testing for CO in the appliance vent is a part of combustion testing that happens under worst-case conditions. If CO is present in undiluted combustion byproducts more than 100 parts per million (ppm) as measured or 200 ppm air-free, the appliance fails the CO test under current DOE standards.

Note: Both the DOE SWS and BPI-1200 standard specify CO limits for furnaces and boilers at 200 ppm as measured or 400 ppm air free. Many weatherization agencies have long used a stricter standard of 100 ppm as measured and 200 ppm air free. Weatherization agencies may use the stricter legacy standard of 100/200 ppm for now. This legacy standard conforms to the SWS and BPI CO limits for space heaters and water heaters, which are also 100 ppm as measured or 200 ppm air free.

Ambient Air Monitoring for CO

The DOE SWS require contractors to monitor CO during combustion testing to ensure that CO in the combustion appliance zone (CAZ) doesn't exceed 35 parts per million (ppm). If ambient CO levels in the combustion zone exceed 35 ppm, stop testing for your own safety. Ventilate the CAZ thoroughly before resuming combustion testing. Investigate indoor CO levels of 9 ppm or greater to find their cause. This is the ASHRAE 24-hour CO exposure limit. *See "Causes of Carbon Monoxide (CO)" on page 22.*

8.1.4 Worst-Case CAZ Depressurization Testing

SWS Detail: 2.0105.1 Combustion Worker Safety, 2.0201.1 Combustion Appliance Zone (CAZ) Testing, 2.0201.2 Combustion Safety

CAZ depressurization is the leading cause of backdrafting and flame roll-out in furnaces and water heaters that vent into naturally drafting chimneys.

Worst-case vent testing uses the home's exhaust fans, air handler, and chimneys to create worst-case depressurization in the combustion-appliance zone (CAZ). The CAZ is an area containing one or more combustion appliances. During this worst-case testing, you can measure the CAZ pressure difference with reference (WRT) to outdoors and test for spillage.

Worst-case conditions do occur, and venting systems must exhaust combustion byproducts even under these extreme conditions. Worst-case vent testing exposes whether or not the venting system exhausts the combustion gases when the combustion-zone pressure is as negative as you can make it. A digital manometer is the best tool for accurate and reliable readings of both combustion-zone depressurization and chimney draft.

Flame roll-out: A serious fire hazard can occur when the chimney is blocked, when the combustion zone is depressurized, or during extremely cold weather.

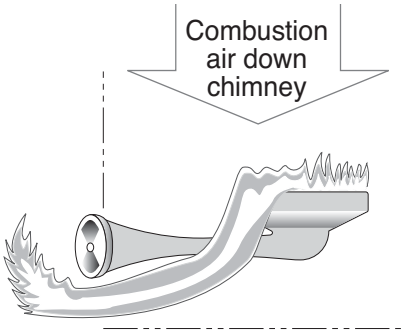

Take all necessary steps to reduce CAZ depressurization and minimize combustion spillage, based on your tests.

Worst-Case CAZ Depressurization Test

SWS Detail: 2.0201.1 Combustion Appliance Zone (CAZ) Testing, 2.0299.1 Combustion Appliance Depressurization Limits Table

Follow the steps below to find the worst-case depressurization level in the combustion appliance zone (CAZ).

1. Close all exterior doors, windows, and fireplace damper(s). Open all interior doors, including closet doors.
2. Remove furnace filter, or replace with a new filter. Be sure the filter slot is covered.
3. Record the base pressure of the CAZ with reference to outdoors.
4. Turn on all clothes dryers and exhaust fans. (Clean clothes dryer filter trap)
5. Open or close interior doors including the CAZ door, to maximize the negative pressure. Record this pressure.
6. Turn on the furnace air handler.
7. Open or close interior doors including the CAZ door, to maximize the negative pressure. Record this pressure.

Worst-case depressurization: Worst-case depressurization tests identify problems that weaken draft and restrict combustion air. The testing described here is intended to reveal the cause of the CAZ depressurization and spillage.

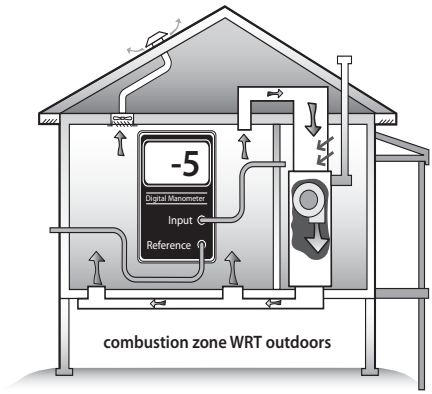

8. Calculate the net difference between the worst depressurization found from #5 or #7 and the baseline pressure. This is the worst-case depressurization.

9. Refer to the *SWS 2.0299.1* Combustion Appliance Depressurization Limits Table or *"SWS Maximum CAZ Depressurization" on page 479*.

10. Specify improvement if the measured worst-case depressurization limit is exceeded. *See "Mitigating CAZ Depressurization and Spillage" on page 241.*

Troubleshooting depressurization sources: When depressurization resists simple diagnosis or persists after mitigation attempts, you can test depressurization caused by exhaust appliances and the air handler separately to determine which is the larger depressurizer. Observe the effect of opening and closing interior doors and the CAZ door to determine which house zones are causing depressurization in the CAZ.

Spillage and CO Testing

Next, verify that the appliance venting systems don't spill or produce excessive CO at worst-case depressurization. Test each appliance in turn for spillage and CO as described below.

1. Detect spillage at the draft diverter of each combustion appliance in one of these ways.

   a. Smoke from a smoke generator being repelled by spillage at the draft diverter.

   b. A mirror fogging at the draft diverter

2. If spillage in one or more appliances continues at worst-case depressurization for 2 minutes or more, take action to correct the problem.

3. Measure CO in the undiluted flue gases of each appliance after 5 minutes of operation at worst-case depressurization. If CO in undiluted flue gases is more than

100 ppm as measured or 200 ppm air-free measurement, take action to reduce CO level.

Spillage and draft: Spillage and draft are two indications of whether the combustion gases are exiting the building as they should. In this guide, we focus on spillage because it's spillage we're trying to avoid, and we can detect it easily.

Draft, if you measure it, should be between 0 pascals (0.000 IWC) and –10 pascals (–0.040 IWC) for atmospheric burners. Positive draft indicates spillage, but not reliably. Draft is complicated and requires training to understand what it is. Look for spillage, unless you understand draft and know how to measure it.

Note: Both the DOE SWS and BPI-1200 standard specify higher (less stringent) time limits for spillage than the 1 minute specified in this section of the field guide. The SWS specifies 2 minutes. BPI specifies 2 minutes for a warm chimney and 5 minutes for a cold chimney. Weatherization agencies may continue to use the more stringent legacy spillage limit of 1 minute for now.

Spill switch: If you don't trust an appliance to be spill-proof, install a spill switch that extinguishes the burner if the chimney spills.

8.1.5 Mitigating CAZ Depressurization and Spillage

If you find problems with CAZ depressurization or spillage, consider the improvements discussed next to solve the problems.

If the appliance spills or shows inadequate draft, open a window, exterior door, or interior door to observe whether the additional combustion airflow through that opening stops the spillage.

1. If this additional air improves draft, the problem is usually depressurization.
2. If this additional air doesn't stops the spillage, inspect the chimney. The chimney may be obstructed, undersized, oversized, or leaky.

Improvements to Mitigate CAZ Depressurization

This list of duct improvements may solve spillage problems detected during the previous tests on a forced air heating system.

- Seal all return-duct leaks near the furnace.
- Isolate the CAZ from return registers and exhaust fans by air-sealing the CAZ from the depressurizing zones and providing combustion air to the sealed CAZ.
- Reduce depressurization from the exhaust appliances.

These two suggestions may reduce depressurization caused by the home's exhaust appliances.

1. Isolate combustion appliances from exhaust fans and clothes dryers by air sealing between the CAZ and zones containing these exhaust devices as described on *page 243*.
2. Provide make-up air for dryers and exhaust fans and/or provide combustion air inlet(s) to the CAZ. *See page 292.*

Table 8-1: Spillage and Draft Problems and Solutions

Problem	Possible Solutions
Spills immediately and continuously	Remove chimney blockage, seal chimney air leaks, or provide additional combustion air as necessary.
Exhaust fans cause spillage	Provide make-up or combustion air if opening a door or window to outdoors improves draft during testing.
Blower activation causes spillage	Seal leaks in the furnace and in nearby return ducts. Isolate the furnace from nearby return registers.

Chimney Improvements to Mitigate Spillage Problems

Suggest the following chimney improvements to mitigate spillage problems detected during the previous testing.

- Remove chimney obstructions.
- Repair disconnections or leaks at joints and where the vent connector joins a masonry chimney.
- Measure the size of the vent connector and chimney and compare to vent-sizing information listed in Chapter 13 of the *National Fuel Gas Code (NFPA 54)*. A vent connector or chimney liner that is either too large or too small can reduce draft.
- If wind interferes with draft, install a wind-dampening chimney cap.
- If the masonry chimney is corroded, install a new chimney liner.
- Increase the pitch of horizontal sections of vent.

Table 8-2: Combustion Problems and Possible Solutions

Problem	Possible causes and solutions
Spillage with CAZ depressurization	Return duct leaks, clothes dryer, exhaust fans, other combustion vents. Seal return leaks. Isolate CAZ. Provide make-up air.
Spillage with no CAZ depressurization	Chimney or vent connector is blocked, leaky, incorrectly sized, or has inadequate slope. Or else CAZ is too airtight.
Excessive CO	Mixture too rich or too lean. Adjust gas pressure. Check chimney and combustion air for code compliance.
Stack temperature or temperature rise too high or low	Adjust fan speed or gas pressure. Improve ducts to increase airflow.
Oxygen too high or low	Adjust gas pressure, but don't increase CO level.

8.1.6 Zone Isolation for Atmospherically Vented Appliances

An isolated CAZ improves the safety of atmospherically vented appliances. The CAZ is isolated if it receives combustion air only from outdoors. An isolated CAZ doesn't require worst-case depressurization and spillage tests. However you should inspect the CAZ for connections with the home's main zone and make sure it is isolated.

1. Look for connections between the isolated CAZ and the home. Examples include joist spaces, transfer grilles, leaky doors, and holes for ducts or pipes.
2. Measure a base pressure from the CAZ to outdoors.
3. Perform 50-pascal blower door depressurization test with the combustion appliances disabled. The CAZ-to-outdoors pressure should not change more than 5 pascals during the blower door test.

4. If the CAZ-to-outdoors pressure changed more than 5 pascals, air-seal the zone, and retest as described in steps 2 and 3.
5. If you can't air-seal the CAZ adequately to isolate the zone, solve worst-case depressurization and spillage problems as described in *"Mitigating CAZ Depressurization and Spillage" on page 241*.

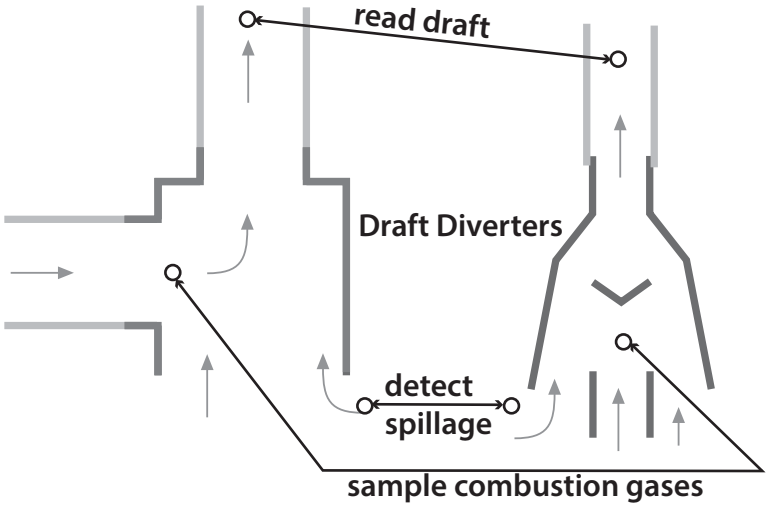

Testing locations: This illustration shows two draft diverters and the locations (circles) for draft testing, spillage detection, and sampling of combustion gases.

8.2 Electronic Combustion Analysis

SWS Detail: 5.3003.2 Combustion Analysis of Oil-Fired Appliances, 2.0201.2 Combustion Safety, 5.3003.14 Combustion Analysis of Gas-Fired Appliances (LP and Natural Gas)

The goal of a combustion analysis is to quickly analyze combustion safety and efficiency. When the combustion heater reaches steady-state efficiency (SSE), you can measure its most critical

combustion parameters. This information saves time and informs both service and installation adjustments.

Oxygen from the air

Carbon dioxide and water are the products of complete combustion.

Carbon monoxide is the product of incomplete combustion

$$CH_4 + O_2 \longrightarrow CO_2 + H_2O + CO + O_2$$

Methane, the principle component of natural gas.

Some oxygen goes through combustion without reacting. This percent of excess oxygen informs us about the fuel-air mixture.

Modern flue-gas analyzers measure O_2, CO, and flue-gas temperature. Some models also measure draft. Flue-gas analyzers also calculate combustion efficiency or steady-state efficiency (SSE), which are synonymous.

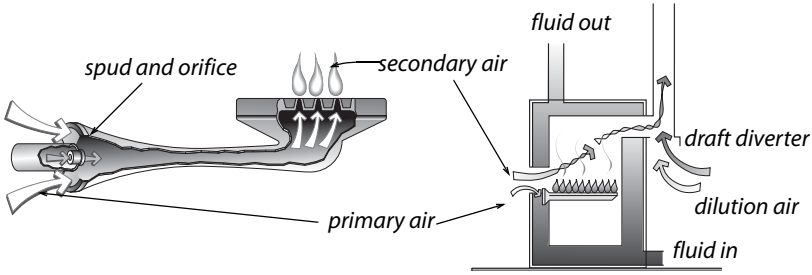

Atmospheric, open combustion gas burners: Combustion air comes from the indoors in open combustion appliances. These burners use the heat of the flame to pull combustion air into the burner. Dilution air, entering at the draft diverter, prevents overfire draft from becoming excessive.

70+ Furnace: Sample flue gases within the draft diverter inside each exhaust port.

80+ Furnace: Measure draft and sample flue gases in the vent connector above the furnace.

8.2.1 Critical Combustion-Testing Parameters

These furnace-testing parameters tell you how efficient and safe the furnace currently is and how much you might be able to improve efficiency. Use these measurements to analyze the combustion process.

Carbon monoxide (CO) (ppm): Poisonous gas indicates incomplete combustion. Modern combustion analyzers let you choose between a normal flue gas and air measurement (as measured) or a corrected measurement that calculates the concentration in theoretical **air-free** flue gases. Adjusting combustion to produce less than 100 ppm as measured or 200 ppm air-free is almost always possible with fuel-pressure adjustments, air adjustments, or burner maintenance.

Oxygen (percent): Indicates the percent of excess air and whether fuel-air mixture is within a safe and efficient range. Efficiency increases as oxygen decreases because excess air, indicated by the O_2 carries heat up the chimney. Percent O_2 may

also indicate the cause of CO as either too little or too much combustion air. Technicians used to measure CO_2, but O_2 is easier to measure, and you only need to measure one of these two gases.

Flue-gas temperature: Flue-gas temperature is directly related to furnace efficiency. Too high flue-gas temperature wastes energy and too-low flue-gas temperature causes corrosive condensation in the venting system.

Smoke number: For oil only, this measurement compares the stain made by flue gases with a numbered stain-darkness rating called smoke number. Smoke number should be 1 or lighter on a 1-to-10 smoke scale.

Draft: The pressure in the chimney or vent connector (chimney draft or breech draft). Also the pressure in the combustion chamber (over-fire draft), used primarily with oil power burners.

Table 8-3: Combustion Standards for Gas Furnaces and Boilers

Performance Indicator	SSE 70+	SSE 80+	SSE 90+
Carbon monoxide (CO) (ppm as measured)	<100 ppm	<100 ppm	<100 ppm
Stack temperature (°F)	350°–475°	325°–450°	<120°
Oxygen (%O2)	5–10%	4–9%	4–9%
Natural gas pressure inches water column (IWC)	3.2–4.2 IWC*	3.2–4.2 IWC*	3.2–4.2 IWC*
LP gas pressure	10–12 IWC	10–12 IWC	10–12 IWC
Steady-state efficiency (SSE) (%)	72–78%	78–82%	92–97%
Chimney draft (IWC, Pa)	–0.020 IWC –5 Pa	–0.020 IWC –5 Pa	0.100–0.250 IWC +25–60 Pa

* pmi = per manufacturer's instructions
Use these standards also for boilers except for temperature rise.
See "Minimum Oil Burner Combustion Standards" on page 270.

Table 8-4: Carbon Monoxide Causes and Solutions

Cause	Analysis & Solution
Flame smothered by combustion gases.	Chimney backdrafting from CAZ depressurization or chimney blockage.
Burner or pilot flame impinges.	Align burner or pilot burner. Reduce gas pressure if excessive.
Inadequate combustion air with too rich fuel-air mixture.	O_2 is <6%. Gas input is excessive or combustion air is lacking. Reduce gas or add combustion air.
Blower interferes with flame.	Inspect heat exchanger. Replace furnace or heat exchanger.
Primary air shutter closed.	Open primary air shutter.
Dirt and debris on burner.	Clean burners.
Excessive combustion air cooling flame.	O_2 is >11%. Increase gas pressure.

8.3 Heating System Replacement

This section discusses replacing combustion furnaces and boilers. We'll also discuss gas heating-replacement and oil-heating-replacement specifications.

8.3.1 Combustion Furnace Replacement

SWS Detail: 5.3001.1 Load Calculation and Equipment Selection, 5.3001.2 Ductwork and Termination Design, 5.3002.1 Preparation for New Equipment, 5.3003.1 Data Plate Verification

This section discusses air handlers of combustion furnaces and also heat pumps. Successful air-handler replacement requires selecting the right heat (and cooling) input, blower model, and blower speed. The installation must include making repairs to ducts and other remaining components, and testing to verify that the new air handler operates correctly.

Preparation

- ✓ Recover refrigeration in the existing heating-cooling unit according to EPA regulations.
- ✓ Disconnect and remove the furnace or heat pump, attached air-conditioning equipment, and other materials that won't be reused.
- ✓ Transport these materials off the customer's property to a recycling facility.
- ✓ Verify that all accessible ducts were sealed as part of the furnace's installation, including the air handler, the plenums, and the branch ducts.

Equipment Selection

- ✓ Evaluate the building to determine the correct size of the furnace, using ACCA Manual J or equivalent method.
- ✓ Select the air handler using ACCA Manual S or equivalent method along with manufacturers' air-handler specifications.
- ✓ Select the supply and return registers using ACCA Manual T or equivalent method.

Air-Handler Installation

- ✓ Install MERV 6 or higher filter in the new furnace.
- ✓ The filter retainer must hold the filter firmly in place.
- ✓ The filter must be easy to replace.
- ✓ The filter must provide complete coverage of blower intake or return register. Filter compartment must not permit air to bypass the filter.
- ✓ If flue-gas temperature or supply air temperature are unusually high, check static pressure and fuel input. *See "Ducted Air Distribution" on page 297.*

✓ Attach the manufacturer's literature including, operating manual and service manual, to the furnace.

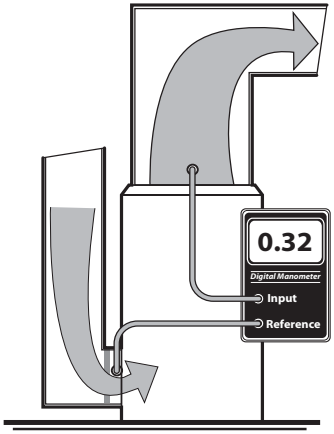

Static pressure and temperature rise: Measure static pressure and temperature rise across the new furnace to verify that the duct system isn't restricted. The correct airflow, specified by the manufacturer, is necessary for high efficiency.

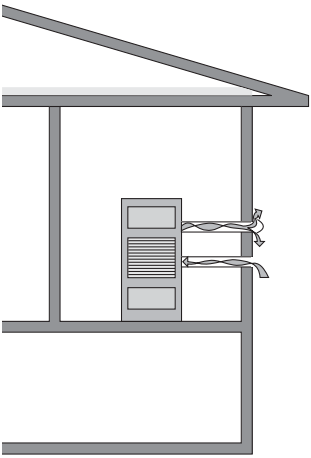

Sealed combustion heaters: Sealed-combustion furnaces prevent the air pollution and house depressurization caused by some open-combustion furnaces.

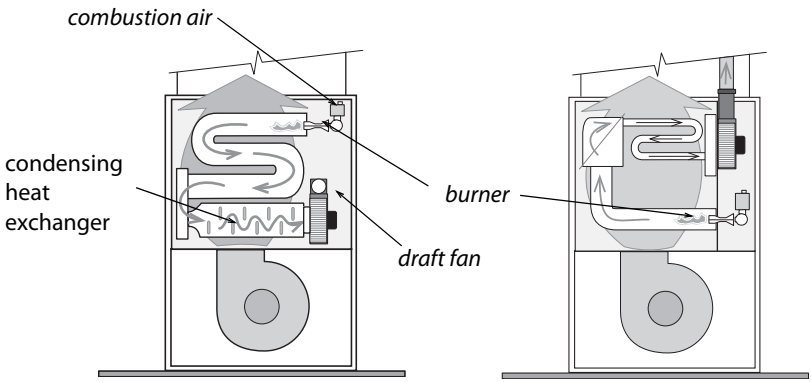

90+ Gas furnace: A 90+ furnace has a condensing heat exchanger and a stronger draft fan for pulling combustion gases through its more restrictive heat exchanger and establishing a strong positive draft.

80+ Gas furnace: An 80+ furnace has a restrictive heat exchanger and draft fan, but has no draft diverter and no standing pilot light.

Supporting Air Handlers

Support the new air handlers using these specifications.

- Support horizontal air handlers from below with a non-combustible, water-proof, and non-wicking material. Or support the horizontal air handler with angle iron and threaded rod from above.
- Support upflow air handlers with a non-combustible material from below when necessary to hold it above a damp basement floor.
- Support downflow air handlers with a strong, airtight supply plenum. Insulate this supply plenum on the exterior of the plenum.

8.3.2 Gas-Fired Heating Installation

SWS Detail: 2.0201.2 Combustion Safety, 5.3003.14 Combustion Analysis of Gas-Fired Appliances (LP and Natural Gas)

The goals of gas-appliance replacement are to save energy and improve heating safety. The heating replacement project should produce a gas-fired heating system in virtually new condition, even though existing components like the gas lines, chimney, pipes, or wiring may remain.

Include maintenance or repair of existing components as part of the installation. Analyze design defects in the original system, and correct the defects during the heating system's replacement.

- If possible, install a condensing sealed-combustion (direct vent) furnace or boiler with a 90+ AFUE.
- Install non-condensing furnaces and boilers with a minimum AFUE of 80% if the 90% replacement unit isn't cost-effective or practical.
- Install new gas-fired unit with adequate clearances to allow maintenance.
- Follow manufacturer's venting instructions along with the National Fuel Gas Code (NFPA 54) to install a proper venting system. *See "Inspecting Venting Systems" on page 279.*
- Check clearances of the heating unit and its vent connector to nearby combustibles, according to NFPA 54. *See page 279.*
- Measure the new unit's gas input and adjust the gas input if necessary.

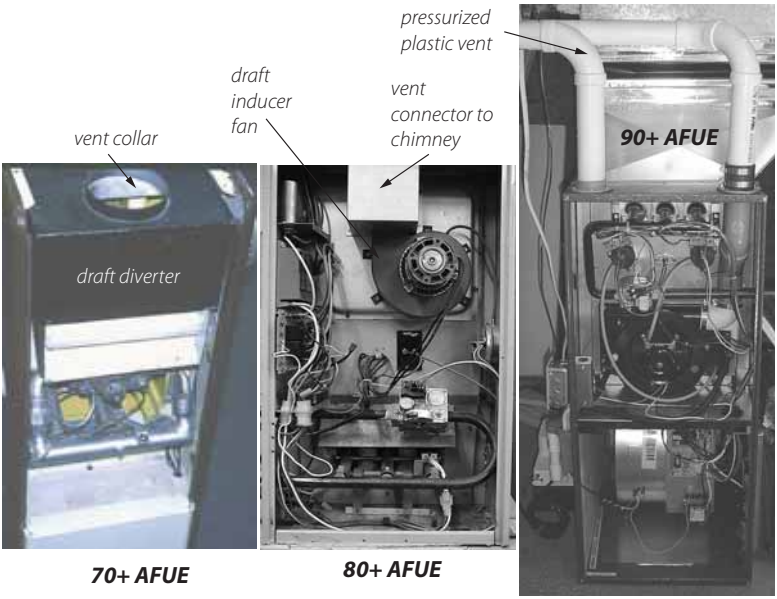

Gas furnace evolution: Energy auditors should be able to identify the 3 types of gas and propane furnaces. Only the 90+ AFUE furnace has a pressurized vent. The two earlier models vent into traditional atmospheric chimneys.

Testing New Gas-Fired Heating Systems

- ✓ Do a combustion test, and adjust fuel-air mixture to minimize O_2. However don't allow CO beyond 100 ppm as measured or 200 ppm air-free with this adjustment. *See pages 235 and 264.*
- ✓ Verify that the gas water heater vents properly after installation of a sealed-combustion or horizontally vented furnace or boiler. Install a chimney liner if necessary to provide right-sized venting for the water heater.

8.3.3 Combustion Boiler Replacement

SWS Details: 2.0105.1 Combustion Worker Safety, 5.3001.1 Load Calculation and Equipment Selection, 5.3101.2 Space Load Calculation—Heat Emitter Sizing

Technicians replace boilers as an energy-conservation measure or for health and safety reasons.

Boiler piping and controls present many options for zoning, boiler staging, and energy-saving features. Dividing homes into zones, with separate thermostats, can significantly improve energy efficiency compared to operating a single zone.

Follow these specifications when recommending a replacement boiler.

Design

A boiler's seasonal efficiency is more sensitive to correct sizing than is a furnace's efficiency.

- ✓ Determine the correct size of the boiler, using ACCA Manual J and considering the installed radiation surface connected to the boiler.
- ✓ Consider weatherization work that reduced the heating load serviced by the previous boiler when sizing the new boiler.
- ✓ Size new radiators according to room heat loss and design water temperature.
- ✓ Specify radiator temperature controls (RTCs) for areas with a history of overheating.
- ✓ A functioning pressure-relief valve, expansion tank, air-excluding device, back-flow preventer, and an automatic fill valve must be part of the new hydronic system.

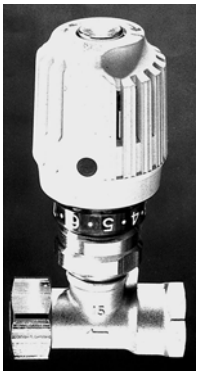

Radiator temperature control: RTCs work well for controlling room temperature, especially in overheated rooms.

Pump and Piping

- ✓ Verify that all supply piping is insulated with foam or fiberglass pipe insulation.
- ✓ Suggest that the pump be installed near the downstream side of the expansion tank to prevent the suction side of the pump from depressurizing the piping, which can pull air into the piping system.
- ✓ Replace the expansion tank, unless it's the proper size for the new system. Adjust the expansion tank for the correct pressure during boiler installation. *See page 326.*
- ✓ Extend new piping and radiators to conditioned areas, like additions and finished basements, which are currently heated by space heaters.

Controls

- ✓ Maintaining a low-limit boiler-water temperature is wasteful. Boilers should be controlled for a cold start, unless the boiler is used for domestic water heating.
- ✓ For large boilers, install reset controllers that adjust supply water temperature according to outdoor temperature and prevent the boiler from firing when the outdoor temperature is above a setpoint where heat isn't needed.

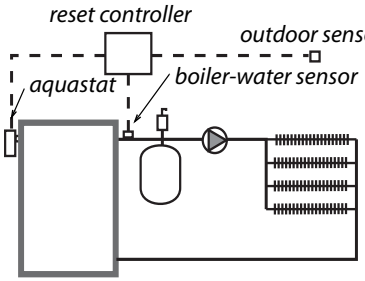

Reset controller: This control adjusts circulating-water temperature depending on the outdoor temperature.

✓ Verify that return-water temperature is above 130° F for gas and above 150° F for oil, to prevent acidic condensation within the boiler, unless the boiler is designed for condensation. Install piping bypasses, mixing valves, primary-secondary piping, or other strategies, as necessary, to prevent condensation within a non-condensing boiler.

Combustion Testing

✓ Inspect the chimney and upgrade it if necessary.

✓ Verify that flue-gas oxygen and temperature are within the ranges specified in these two tables.

a. *"Combustion Standards for Gas Furnaces and Boilers" on page 247*

b. *"Minimum Oil Burner Combustion Standards" on page 270*

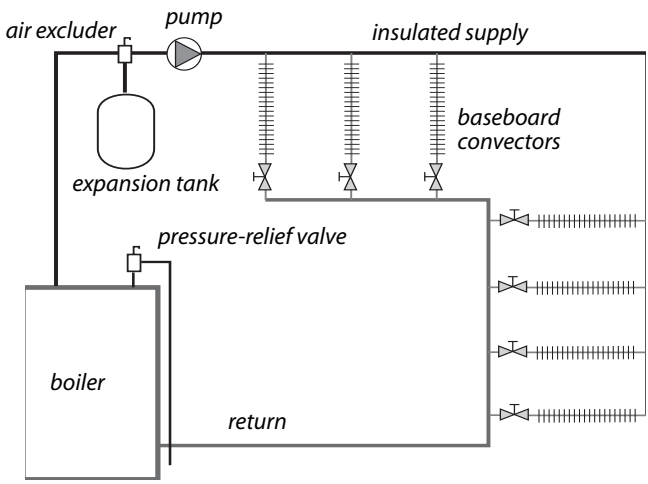

Simple reverse-return hot-water system: The reverse-return method of piping is the simplest way of balancing flow among the heat emitters.

Steam Boilers

Steam-boiler performance is heavily dependent on the performance of the existing steam distribution system. The boiler installer should know how the distribution system performed when it was connected to the old boiler.

The new boiler's water line should be at the same height as the old boiler's water line, or the installers should know how to compensate for the difference in water-line levels. *See "Steam Heating and Distribution" on page 329.*

8.3.4 Oil-Fired Heating Installation

SWS Detail: 2.0201.2 Combustion Safety, 2.0203.3 Draft Regulation—Category I Appliance, 5.3003.9 Heating and Cooling Controls, 5.3003.4 Evaluating Electrical Service; 5.3003.2 Combustion Analysis of Oil-Fired Appliances

Oil-heating replacement should provide an oil-fired heating system in virtually new condition, even though components like the oil tank, chimney, piping, and wiring may remain in place.

Any maintenance or repair for these remaining components should be part of the replacement job. Analyze design defects of the original system, and correct them during the heating-system replacement.

- ✓ New oil-fired furnaces and boilers should have an AFUE of 83%.
- ✓ Install new oil-fired furnaces and boilers with adequate clearances to facilitate maintenance.
- ✓ Inspect the existing chimney and the vent connector. Replace the vent connector with Type L double-wall vent pipe.
- ✓ Install a stainless steel chimney liner if necessary. *See "Special Venting Considerations for Gas" on page 289.*

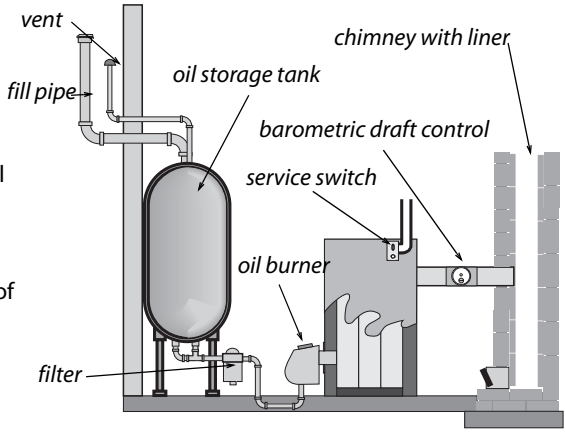

Oil heating system: Components of an oil heating system may need replacement, repair, or cleaning during replacement of the furnace or boiler.

- ✓ Verify that the clearances between the vent connector and nearby combustibles are adequate. See *"Clearances to Combustibles for Vent Connectors" on page 281*.
- ✓ Install a new fuel filter, and purge the fuel lines as part of the new installation.

Controls

- ✓ Verify that a working emergency shut-off is installed in the living space.
- ✓ Look for a control that interrupts power to the burner in the event of a fire.
- ✓ Measure the transformer voltage to verify that it complies with the manufacturer's specifications.
- ✓ Measure the control circuit amperage, and adjust the thermostat's heat anticipator to match the amperage. Or, follow the thermostat manufacturer's instructions for adjusting cycle length.

Testing New Oil-Fired Heating Systems

- ✓ Measure the oil pressure.
- ✓ Look for the oil nozzle's gallon-per-minute (gpm) rating.
- ✓ Adjust oil pressure or replace nozzle as necessary to produce the correct input and to limit the flue-gas temperature.

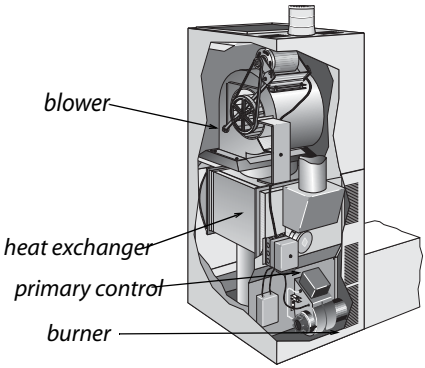

Oil-fired downflow furnaces: Their design hasn't changed much in recent years except for the flame-retention burner.

- ✓ Verify that the spray angle and spray pattern fit the size and shape of the combustion chamber.

- ✓ Adjust oxygen, flue-gas temperature, and smoke number to match manufacturer's specifications or specifications given here. Smoke number should be zero on all modern oil-fired equipment.

8.3.5 Evaluating Oil Tanks

Inspect the oil tank, and remove dirt and moisture at bottom of the tank. Verify that the oil tank and oil lines comply with NFPA 31.

Oil tanks are now almost always installed above ground. But many old oil tanks are still buried. Inspect above-ground tanks to find leaks.

Below-ground tanks and above-ground tanks can both be evaluated by tests for water in the fuel system.

1. Start by inspecting the oil filter for corrosion. Corrosion in the oil filter indicates a high probability of water and corrosion in the tank.
2. Next use water-finding paste, applied to the end of a probe, to detect water at the bottom of the oil tank. For indoor tanks, you'll need a flexible probe because of the ceiling-height limitations.

See also NFPA 31 Chapter 7 Fuel Oil Tanks.

Inspecting Above-Ground Oil Tanks

Indoor oil leaks are usually accompanied by petroleum smells. Inspect the oil tank as well as all the oil piping between the oil tank and the oil-fired furnace.

- ✓ Look for different colors on the tank from condensation, corrosion, or fuel leaks.
- ✓ Look at the bottom of the oil tank and see if oil is dripping from a leak.
- ✓ Look for patches from previous leaks.

- ✓ If the oil tank is new, don't mistake previous oil-tank leaks for leaks in the new tank.
- ✓ Use the water test described previously.

If you smell oil but you can't see the leak, consider the following tests.

- ✓ Use the water test described previously.
- ✓ For hidden leaks, consider ultrasound leak detection by a oil-tank specialist.

Advice for Below-Ground Oil Tanks

Leaky below-ground oil tanks are a financial problem and a major environmental problem. Local, state, or federal authorities may require homeowners to remove the tank, abandon it in place, or have it leak-tested by one of the following methods.

- ✓ Use the water testing described previously.
- ✓ A tank specialist collects multiple soil samples from around the tank and analyzes them for petroleum contamination by an approved method.

8.4 Combustion Space Heater Replacement

SWS Detail: 2.0201.2 Combustion Safety

Space heaters are inherently more efficient than central heaters, because they have no ducts or distribution pipes.

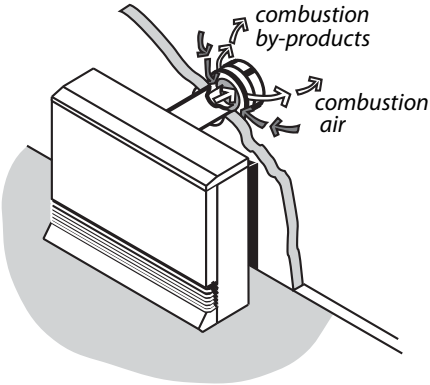

Sealed-combustion space heater: Sealed-combustion space heaters draw combustion air in, using a draft fan.

Space heater controls: Many modern energy-efficient space heaters have programmable thermostats as a standard feature.

Weatherization agencies replace space heaters as an energy-conservation measure or for health and safety reasons. Choose a sealed-combustion space heater. Inspect existing space heaters for health and safety problems.

- ✓ If power outages are common, select a space heater that will work without electricity.
- ✓ Follow manufacturer's venting instructions carefully. Don't vent sealed-combustion or induced-draft space heaters into naturally drafting chimneys.
- ✓ Verify that flue-gas oxygen and temperature are within the ranges specified in *Table 8-3 on page 247.*
- ✓ If the space heater sits on a carpeted floor, install a fire-rated floor protector.
- ✓ Install the space heater away from traffic, draperies, and furniture.
- ✓ Provide the space heater with a correctly grounded duplex receptacle for its electrical service.

8.4.1 Space Heater Operation

Inform the customer of the following operating instructions.

- ✓ Don't store any objects near the space heater that would restrict airflow around it.
- ✓ Don't use the space heater to dry clothes or for any purpose other than heating the home.
- ✓ Don't allow anyone to lean or sit on the space heater.
- ✓ Don't spray aerosols near the space heater. Many aerosols are flammable or can cause corrosion to the space heater's heat exchanger.

8.4.2 Unvented Space Heaters

SWS Detail: 2.0202.1 Unvented Space Heaters: Propane, Natural Gas, and Kerosene Heaters, 2.0401.1 Air Sealing Moisture Precautions

Unvented space heaters include ventless gas fireplaces and gas logs installed in fireplaces previously designed for wood-burning or coal-burning. These unvented space heaters create indoor air pollution because they deliver all their combustion byproducts to the indoors. Unvented space heaters aren't safe. Replace them with vented space heaters or electric space heaters.

DOE forbids unvented space heaters as primary heating units in weatherized homes. However, unvented space heaters may be used as secondary heaters, under these four requirements.

1. The heater must have an input rating less than 40,000 BTUH.
2. If located in a bedroom, the heater must have an input rating of less than 10,000 BTUH.
3. The heater must be equipped with an oxygen-depletion sensor.
4. The room containing the heater must have adequate combustion air.

5. Home must have adequate ventilation: *See "Whole-Building Ventilation" on page 356.*

8.5 Gas Burner Safety & Efficiency Service

Gas burners should be inspected and maintained during a service call. These following specifications apply to gas furnaces, boilers, water heaters, and space heaters.

8.5.1 Combustion Efficiency Test for Furnaces

Perform the following procedures at steady-state efficiency (SSE) to verify a furnace's correct operation.

- Perform a combustion test using a electronic flue-gas analyzer. Recommended flue-gas temperature depends on the type of furnace and is listed in the table titled, *"Combustion Standards for Gas Furnaces and Boilers" on page 247*.
- Measure temperature rise (supply minus return temperatures). Temperature rise should be within the manufacturer's specifications for a furnace or boiler: between 30° and 70°.
- If O_2 is high, or the estimated output from the table is low, increase gas pressure to 6% O_2 if possible as long as you don't create CO.
- Increase gas pressure if needed to increase temperature rise and flue-gas temperature.

If you know the airflow through the furnace from measurements described in *"Ducted Air Distribution" on page 297*, you can use the table, *"Gas Furnace Output Table" on page 480*, to check whether output is approximately what the manufacturer intended. Dividing this output by measured input as described above gives you another check on the steady-state efficiency.

8.5.2 Inspecting Gas Combustion Equipment

Perform the following inspection procedures on all gas-fired furnaces, boilers, water heaters, and space heaters, as necessary.

- ✓ Look for soot, melted wire insulation, and rust in the burner and manifold inside and outside the burner compartment. These signs indicate flame roll-out, combustion gas spillage, CO, and incomplete combustion.
- ✓ Inspect the burners for dust, debris, misalignment, flame-impingement, and other flame-interference problems. Clean, vacuum, and adjust as needed.
- ✓ Inspect the heat exchanger for cracks, holes, or leaks.
- ✓ Verify that furnaces and boilers have dedicated circuits with fused safety shutoffs near the appliance. Verify that all 120-volt wiring connections are enclosed in covered electrical boxes.
- ✓ Verify that pilot is burning (if equipped) and that main burner ignition is satisfactory.
- ✓ Check venting system for proper diameter and pitch. *See page 279.*
- ✓ Check venting system for obstructions, blockages, or leaks.
- ✓ Observe flame characteristics. Flames should be blue and well shaped. If flames are white or yellow, the burner may suffer from faulty combustion.

8.5.3 Testing and Adjustment

The goal of these measures is to reduce carbon monoxide (CO), stabilize flame, and verify the operation of safety controls.

- ✓ Do an electronic combustion analysis and note the oxygen, CO, and flue-gas temperature.
- ✓ Test for spillage or measure draft. Take action to improve the draft if it is inadequate because of improper venting,

obstructed chimney, leaky chimney, or depressurization. *See page 241.*

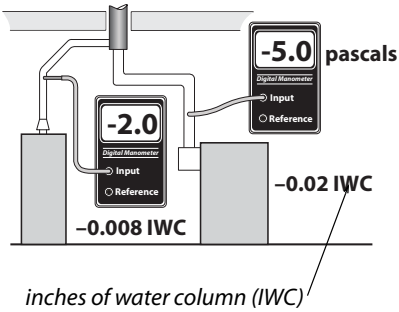

Measuring draft: Measure chimney draft *downstream* of the draft diverter.

- ✓ If you measure CO and the measured oxygen level is low, open a window while observing CO level on the meter to see if CO is reduced by increasing the available combustion air through the open window. *See page 292.*
- ✓ Adjust gas input if combustion testing indicates over-firing or under-firing.
- ✓ For programmable thermostats, read the manufacturer's instructions about how to control cycle length. These instructions may be printed inside the thermostat.

Burner Cleaning

Clean and adjust the burner if any of these conditions exists.

- CO is greater than 100 ppm as measured or 200 ppm air-free measurement.
- Visual indicators of soot or flame roll-out exist.
- Burners are visibly dirty.
- Measured draft is inadequate. *See page 279.*
- The appliance has not been serviced for two years or more.

Maintenance and Cleaning

Gas-burner and gas-venting maintenance should include the following measures.

- ✓ Remove causes of CO and soot, such as over-firing, closed primary air intake, flame impingement, and lack of combustion air.
- ✓ Remove dirt, rust, and other debris that may be interfering with the burners. Clean the heat exchanger if there are signs of soot around the burner compartment.
- ✓ Seal leaks in vent connectors and chimneys.

8.6 Oil Burner Safety and Efficiency Service

Oil burners require annual maintenance to maintain acceptable safety and combustion efficiency. Use combustion analysis to evaluate the oil burner and to guide adjustment and maintenance. These procedures apply to oil-fired furnaces, boilers, and water heaters. Use other test equipment as discussed to measure other essential operating parameters and to make adjustments as necessary.

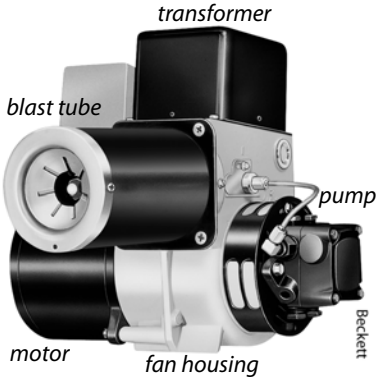

Oil Burners: Oil burners are power burners that atomize the oil by pumping it through a nozzle. A blower forces combustion air into the oil mist. Electrodes powered by a transformer light the mixture.

8.6.1 Oil Burner Testing and Adjustment

SWS Detail: 5.3003.2 Combustion Analysis of Oil-Fired Appliances

Unless the oil-fired heating unit is very dirty or disabled, technicians should do combustion testing and adjust the burner for safe and efficient operation.

Combustion Testing and Adjustment

Combustion testing is essential to understanding the current oil burner performance and potential for improvement.

- ✓ Sample the undiluted flue gases with a smoke tester, after reading the smoke tester instructions. Compare the smoke smudge left by the gases on the filter paper with the manufacturer's smoke-spot scale to find the smoke number.
- ✓ If the smoke number is higher than 3, take steps to reduce smoke before sampling the gases with a combustion analyzer to prevent the smoke from fouling the analyzer.
- ✓ Sample undiluted flue gases between the barometric draft control and the appliance. Analyze the flue gas for O_2, flue-gas temperature, CO, and steady-state efficiency (SSE).
- ✓ Measure the overfire draft over the fire inside the firebox through a plug in the heating unit.
- ✓ A flue gas temperature more than 450° F is a sign that a clean heating unit is oversized. Exceptions: steam boilers and boilers with tankless coils. If the nozzle is oversized, replace the burner nozzle after selecting the correct nozzle size, spray angle, and spray pattern.
- ✓ Adjust the barometric damper for a negative overfire draft of–0.020 IWC or –5 pascals at a test plug in the heating unit.
- ✓ Adjust the air shutter to achieve the oxygen and smoke values, specified in *Table 8-5 on page 270.*
- ✓ Adjust oxygen, flue-gas temperature, CO, and smoke number to match manufacturer's specifications or specifi-

cations given here. Smoke number should be near zero on all modern oil-fired equipment.

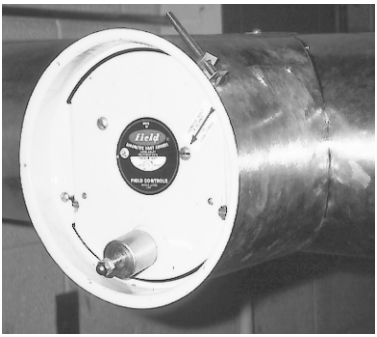

Barometric draft control: This control provides a stable overfire draft and controlled flow of combustion gases through the heat exchanger.

Table 8-5: Minimum Oil Burner Combustion Standards

Oil Combustion Performance Indicator	Non Flame Retention	Flame Retention
Oxygen (% O_2)	4–9%	4–7%
Stack temperature (°F)	350°–600°	325°–500°
Carbon monoxide (CO) parts per million (ppm as measured)	≤100 ppm	≤ 100 ppm
Steady-state efficiency (SSE) (%)	≥ 75%	≥ 80%
Smoke number (1–9)	≤ 2	≤ 1
Excess air (%)	≤ 100%	≤ 25%
Oil pressure pounds per square inch (psi)	≥ 100 psi	≥ 100–150 psi (pmi)*
Atmospheric venting: Overfire draft (negative)	–.020 IWC or –5 Pa.	> –.020 IWC or > –5 Pa.
Positive-pressure burner with atmospheric chimney and barometric control: Over-fire draft (positive)	n/a	or 0.020 to 0.120 IWC 5 to 30 Pa. (pmi)*
Positive-pressure burner with horizontal vent and without a barometric control: Over-fire draft (positive)	n/a	or 0.20 to 0.60 IWC 50 to 150 Pa. (pmi)*
* pmi = per manufacturer's specifications		

Other Efficiency Testing and Adjustment

- ✓ Adjust the gap between electrodes and their angle for proper alignment.
- ✓ Measure the control-circuit amperage. Adjust the thermostat's heat anticipator to match the amperage, or read the thermostat manufacturer's instructions for adjusting cycle length.

- ✓ Measure the oil-pump pressure, and adjust it to manufacturer's specifications if necessary.
- ✓ Measure the transformer voltage, and adjust it to manufacturer's specifications if necessary.
- ✓ Adjust the airflow or the water flow to reduce high flue-gas temperature if possible, but don't reduce flue-gas temperature below 350°F.

8.6.2 Oil Burner Inspection and Maintenance

SWS Detail: 5.3003.4 Evaluating Electrical Service

Use visual inspection and combustion testing to evaluate oil burner operation. An oil burner that passes visual inspection and complies with the specifications on *page 270* may need no maintenance. Persistent unsatisfactory test results may indicate the need to replace the burner or the entire oil-fired heating unit.

Safety Inspection, Testing, and Adjustment

- ✓ Verify that each oil furnace or boiler has a dedicated electrical circuit. Assure that all 120-volt wiring connections are enclosed in covered electrical boxes.
- ✓ Inspect burner and appliance for signs of soot, overheating, fire hazards, corrosion, or wiring problems.
- ✓ Inspect heat exchanger and combustion chamber for cracks, corrosion, or soot buildup.
- ✓ If the unit smells excessively of oil, test for oil leaks and repair the leaks.
- ✓ Time the flame sensor control or stack control to verify that the burner shuts off, within either 45 seconds or a time specified by the manufacturer, when the cad cell is blocked from seeing the flame.

- ✓ Measure the high limit shut-off temperature and adjust or replace the high limit control if the shut-off temperature is more than 200° F for furnaces, or 220° F for hot-water boilers.

Oil Burner Maintenance

After evaluating the oil burner's operation, specify some or all of these maintenance tasks as necessary, to optimize safety and efficiency.

- ✓ Clean the burner's blower wheel.
- ✓ Clean dust, dirt, and grease from the burner assembly.
- ✓ Replace oil filter(s) and nozzle.
- ✓ Clean or replace air filter.
- ✓ Remove soot from combustion chamber.
- ✓ Remove soot from heat exchange surfaces.
- ✓ Adjust gap between electrodes to manufacturer's specs.
- ✓ Check if the nozzle and the fire ring of the flame-retention burner is appropriate for the size of the combustion chamber.
- ✓ Repair the ceramic combustion chamber, or replace it if necessary.
- ✓ Verify correct flame sensor operation.

After these maintenance procedures, the technician carries out the diagnostic tests described previously to evaluate improvement made by the maintenance procedures and to

determine whether more adjustment or maintenance is required.

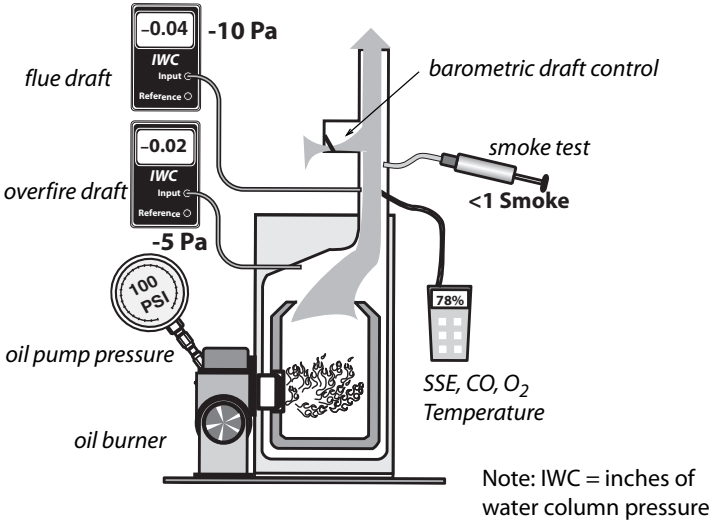

Measuring oil-burner performance: Measuring oil-burning performance requires, a manometer, flue-gas analyzer, smoke tester, and pressure gauge.

8.7 Inspecting Furnace Heat Exchangers

Leaks in heat exchangers are a common problem, causing the flue gases to mix with house air. Ask customers about respiratory problems, flue-like symptoms, and smells in the house when the heat is on. Also, check around supply registers for signs of soot, especially with oil heating. All furnace heat exchangers should be inspected as part of weatherization. Consider using one or more of these six options for evaluating heat exchangers.

1. Look for rust at exhaust ports and vent connectors.
2. Look for flame-impingement on the heat exchanger during firing and flame-damaged areas near the burner flame.

3. Observe flame movement, change in chimney draft, or change in CO measurement when blower is activated and deactivated.
4. Measure the flue-gas oxygen concentration before the blower starts and then again just after the blower starts. There should be no more than a 1% change in the oxygen concentration.
5. Examine the heat exchanger by shining a bright light on one side and looking for light on the other side using a mirror to look into tight locations.
6. Employ chemical detection techniques, according to the manufacturer's instructions.

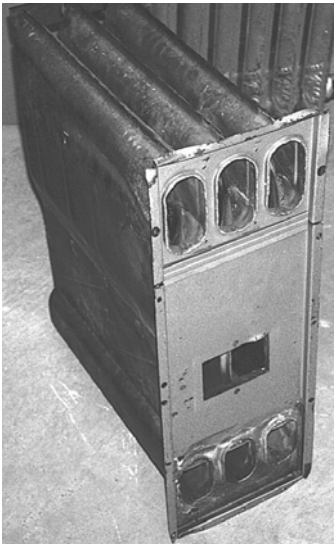

Furnace heat exchangers: Although no heat exchanger is completely airtight, it should not leak enough to display the warning signs described here.

8.8 Wood Stoves

Wood heating is a popular and effective auxiliary heating source for homes. However, wood stoves and fireplaces can cause indoor air pollution and fire hazards. Inspect wood stoves to evaluate potential hazards.

8.8.1 Wood Stove Clearances

Stoves that are listed by a testing agency like Underwriters Laboratory have installation instructions stating their clearance from combustibles. Unlisted stoves must adhere to clearances specified in NFPA 211.

8.8.2 Stove Clearances

Look for metal tags on the wood stove that list minimum clearances. Listed wood stoves may be installed to as little as 6 inches away from combustibles, if they incorporate heat shields and combustion design that directs heat away from the stove's back and sides.

Unlisted stoves must be at least 36 inches away from combustibles. Ventilated or insulated wall protectors may decrease unlisted clearance from one-third to two thirds, according to NFPA 211. Always follow the stove manufacturer's or heat-shield manufacturer's installation instructions.

Floor Construction and Clearances

The floor of a listed wood stove must comply with the specifications on the listing (metal tag). Modern listed stoves usually sit on a 1-inch thick non-combustible floor protector that extends 18 inches beyond the stove in front.

The floor requirements for underneath a unlisted wood stove depends on the clearance between the stove and the floor, which depends on the length of its legs. Unlisted wood stoves must have floor protection underneath them unless they rest on a floor of non-combustible construction. An example of a non-combustible floor is one composed of only masonry material sitting on sand or gravel.

An approved floor protector is either one or two courses of hollow masonry material (4 inches thick) with a non-combustible quarter-inch surface of steel or other non-combustible material on top of the masonry. This floor for a non-listed wood stove

must extend no less than 18 inches beyond the stove in all directions.

Vent-Connector and Chimney Clearance

Interior masonry chimneys require a 2-inch clearance from combustibles and exterior masonry chimneys require a 1-inch clearance from combustibles. All-fuel metal chimneys (insulated double-wall or triple wall) usually require a 2- inch clearance from combustibles.

Double-wall stove-pipe vent connectors require a 9-inch clearance from combustibles or a clearance listed on the product. Single wall vent connectors must be at least 18 inches from combustibles. Wall protectors may reduce this clearance up to two-thirds.

See also *"Wood Stove Clearances" on page 275* and *"Stove Clearances" on page 275*.

8.8.3 Wood Stove Inspection

All components of wood stove venting systems should be approved for use with wood stoves. Chimney sections penetrating floor, ceiling, or roof should have approved thimbles, support packages, and ventilated shields to protect nearby combustible materials from high temperatures. Perform or specify the following inspection tasks.

- ✓ Inspect stove, vent connector, and chimney for correct clearances from combustible materials as listed on stoves and vent assemblies or as specified in NFPA 211.
- ✓ Each wood stove must have its own dedicated flue pipe. Two wood stoves may not share a single flue.
- ✓ If the home is tight (<0.35 ACH), the wood stove should be equipped with a dedicated outdoor combustion-air duct.

- ✓ Inspect vent connector and chimney for leaks. Leaks should be sealed with a high temperature sealant designed for sealing wood stove vents.
- ✓ Galvanized-steel pipe must not be used to vent wood stoves.
- ✓ Inspect chimney and vent connector for creosote build-up, and suggest chimney cleaning if creosote build-up exists.
- ✓ Inspect the house for soot on seldom-cleaned horizontal surfaces. If soot is present, inspect the wood stove door gasket. Seal stove air leaks or chimney air leaks with stove cement. Improve draft by extending the chimney to reduce indoor smoke emissions.
- ✓ Inspect stack damper and/or combustion air intake damper.
- ✓ Check catalytic converter for repair or replacement if the wood stove has one.
- ✓ Assure that heat exchange surfaces and flue passages within the wood stove are free of accumulations of soot or debris.
- ✓ Wood stoves installed in manufactured homes must be approved for use in manufactured homes.

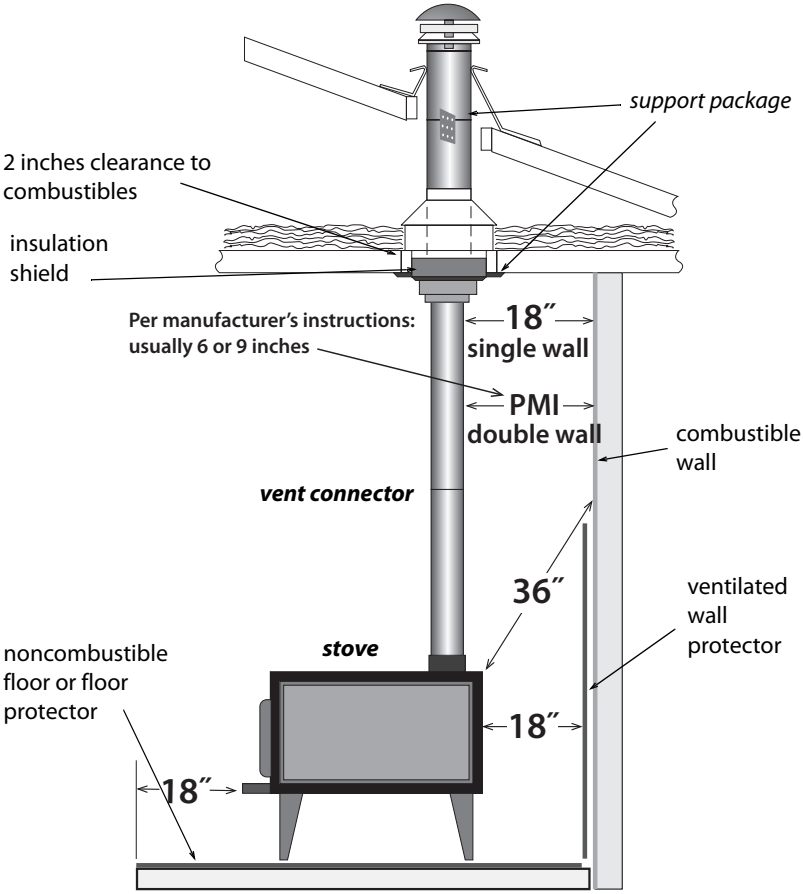

Wood-stove installation: Wood-stove venting and clearances are vitally important for wood-burning safety. Read manufacturer's instructions for the stove and its venting components.

8.9 Inspecting Venting Systems

Combustion gases are vented through vertical chimneys or other types of approved horizontal or vertical vent piping. Identifying the type of existing venting material, verifying the correct size of vent piping, and making sure the venting conforms to the applicable codes are important tasks in inspecting and repairing venting systems. Too large a vent often leads to condensation and corrosion. Too small a vent can result in spillage. The wrong vent materials can corrode or deteriorate from heat.

NFPA Codes

The National Fire Protection Association (NFPA) publishes authoritative information on material-choice, sizing, and clearances for chimneys and vent connectors, as well as for combustion air. The information in this venting section is based on the following NFPA documents.

- NFPA 54: The *National Fuel Gas Code 2006*
- NFPA 31: *Standard for the Installation of Oil-Burning Equipment 2006*
- NFPA 211: *Standard for Chimneys, Fireplaces, Vents, and Solid-Fuel-Burning Appliance*s 2006

8.9.1 Vent Connectors

A vent connector connects the appliance's venting outlet collar with the chimney. Approved vent connectors for gas-fired units are made from the following materials.

- Type-B vent, consisting of a galvanized steel outer pipe and aluminum inner pipe for gas-fired units.
- Type-L vent connector with a stainless-steel inner pipe and a galvanized-steel outer pipe for oil-fired units.

- Double-wall stove-pipe vent connector with a stainless-steel inner pipe and a black-steel outer pipe for solid-fuel units.
- Galvanized steel pipe for gas or oil-fired units only: *See table.*

Table 8-6: Single-Wall Galvanized Vent Connector Thickness

Diameter of Vent Connector (inches)	Inches (gauge)
5 and smaller	0.022 (26 gauge)
6 to 10	0.028 (24 gauge)
11 to 16	0.034 (22 gauge)
Larger than 16	0.064 (16 gauge)

From *International Mechanical Code 2009*

Double-wall vent connectors are the best option, especially for appliances with some non-vertical vent piping. A double-wall vent connector maintains flue gas temperature and prevents condensation. Gas appliances with draft hoods, installed in attics or crawl spaces must use a Type-B vent connector. Use Type-L double-wall vent pipe for oil vent connectors in attics and crawl spaces.

Vent-Connector Requirements

Verify that vent connectors comply with these specifications.

- Vent connectors must be as large as the vent collar on the appliances they vent.
- Single wall vent-pipe sections must be fastened together with 3 screws or rivets.
- Vent connectors must be sealed tightly where they enter masonry chimneys.
- Vent connectors must be free of rust, corrosion, and holes.

- Maintain minimum clearances between vent connectors and combustibles.

Table 8-7: Clearances to Combustibles for Vent Connectors

Vent Connector Type	Clearance
Single wall galvanized steel vent pipe	6" (gas), 18" (oil)
Type-B double wall vent pipe (gas)	1" (gas)
Type L double wall vent pipe	3" or as listed (oil)
Single-wall stove pipe	18" (wood)
Double-wall stove pipe	9" or as listed (wood)

- The chimney combining two vent connectors must have a cross-sectional area equal to the area of the larger vent connector plus half the area of the smaller vent connector. This common vent must be no larger than 7 times the area of the smallest vent. For specific vent sizes, see the NFPA codes listed on *page 279.*

Table 8-8: Areas of Round Vents

Vent diameter	4"	5"	6"	7"	8"
Vent area (square inches)	12.6	19.6	28.3	38.5	50.2

- The horizontal length of vent connectors shouldn't be more than 75% of the chimney's vertical height or have more than 18 inches horizontal run per inch of vent diameter.
- Vent connectors must have upward slope to their connection with the chimney. NFPA 54 requires a slope of at least $^{1}/_{4}$-inch of rise per foot of horizontal run so that combustion gases rise through the vent. The slope also prevents condensation from collecting in the vent and corroding it.

Table 8-9: Connector Diameter vs. Maximum Horizontal Length

Diam (in)	3"	4"	5"	6"	7"	8"	9"	10"	12"	14"
Length (ft)	4.5'	6'	7.5'	9'	10.5'	12'	13.5'	15'	18'	21'

From *International Fuel Gas Code 2000*

- When two vent connectors connect to a single chimney, the vent connector servicing the smaller appliance should enter the chimney above the vent for the larger appliance.

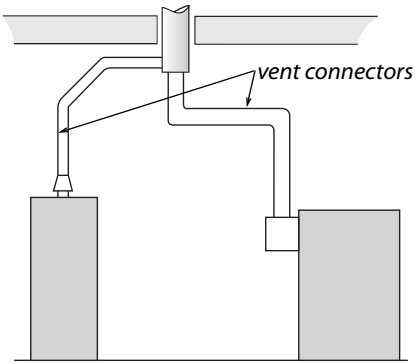

Two vent connectors joining chimney: The water heater's vent connector enters the chimney above the furnace because the water heater has a smaller input.

8.10 Chimneys

There are two common types of vertical chimneys for venting combustion fuels that satisfy NFPA and ICC codes. First there are masonry chimneys lined with fire-clay tile, and second there are manufactured metal chimneys, including all-fuel metal chimneys, Type-B vent chimneys for gas appliances, and Type L chimneys for oil appliances.

8.10.1 Masonry Chimneys

SWS Detail: 2.0203.2 Combustion Flue Gas—Orphaned Water Heaters

Verify the following general specifications for building, inspecting, and repairing masonry chimneys.

- A masonry foundation should support every masonry chimney.
- Existing masonry chimneys should be lined with a fireclay flue liner. There should be a $^{1}/_{2}$-inch to 1-inch air gap between the clay liner and the chimney's masonry to insulate the liner. The liner shouldn't be bonded structurally to the outer masonry because the liner needs to expand and contract independently of the chimney's masonry structure. The clay liner can be sealed to the chimney cap with a flexible high-temperature sealant.

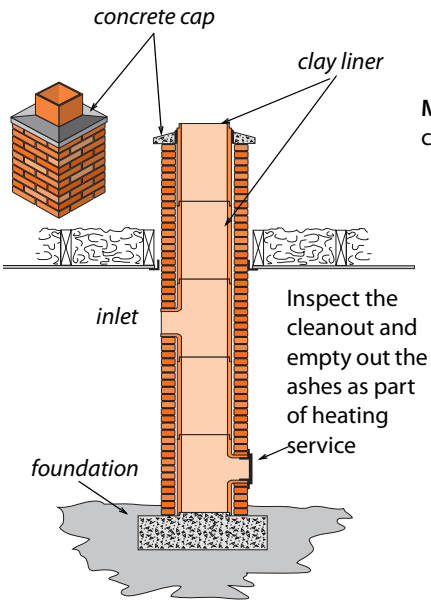

Masonry chimneys: Remain a very common vent for all fuels.

- Masonry chimneys should have a cleanout 12 inches or more below the lowest inlet. Clean mortar and brick dust out of the bottom of the chimney through the clean-out door, so that this debris won't eventually interfere with venting.
- Seal the chimney's penetrations through floors and ceilings with sheet metal and high-temperature sealant as a fire-stop and air barrier.

- Re-build deteriorated or unlined masonry chimneys as specified above or reline them as part of a heating-system replacement or a venting-safety upgrade. Or, install a new metal chimney instead of repairing the existing masonry chimney.

Metal Liners for Masonry Chimneys

Install or replace liners in unlined masonry chimneys or chimneys with deteriorated liners as part of heating system replacement. Orphaned water heaters may also need a chimney liner because the existing chimney may be too large. Use a correctly sized Type-B vent, a flexible or rigid stainless-steel liner, or a flexible aluminum liner.

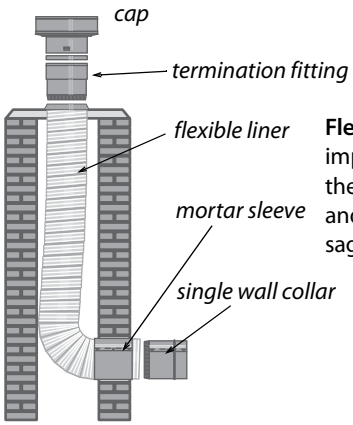

Flexible metal chimney liners: The most important installation issues are sizing the liner correctly along with fastening and supporting the ends to prevent sagging.

Flexible liners require careful installation to avoid a low spot at the bottom, where the liner turns a right angle to pass through the wall of the chimney. Comply with the manufacturer's instructions, which usually require stretching the liner and fastening it securely at both ends, to prevent the liner from sagging and creating a low spot.

Flexible liners are easily damaged by falling masonry debris inside a deteriorating chimney. Use B-vent, L-vent, or single-

wall stainless steel pipe instead of a flexible liner when the chimney is significantly deteriorated.

To minimize condensation, insulate the flexible liner — especially when installed in exterior chimneys. Consider fiberglass-insulation jackets or perlite, if the manufacturer's instructions allow. Wood-stove chimney liners must be stainless steel and insulated.

Sizing flexible chimney liners correctly is very important. Oversizing is common and can lead to condensation and corrosion. The manufacturers of the liners include vent-sizing tables in their specifications. Liners should display a label from a testing lab like Underwriters Laboratories (UL).

Masonry chimneys as structural hazards: A building owner may want to consider reinforcing a deteriorated chimney by repointing masonry joints or parging the surface with reinforced plaster. Other options include demolishing the chimney or filling it with concrete to prevent it from collapsing during an earthquake and damaging the building.

Solutions for Failed Chimneys

Sometimes a chimney is too deteriorated to be re-lined or repaired. In this case, abandon the old chimney and install one of the following.

- A double-wall horizontal sidewall vent, equipped with a barometric draft control and a power venter mounted on the exterior wall. Maintain a 4-foot clearance between the ground and the vent's termination if you live where it snows.
- A new heating unit, equipped with a power burner or draft inducer, that is designed for horizontal or vertical venting.

Table 8-10: Clearances to Combustibles for Common Chimneys

Chimney Type	Clearance
Interior chimney masonry w/ fireclay liner	2"
Exterior masonry chimney w/ fireclay liner	1"
All-fuel metal vent: insulated double-wall or triple-wall pipe	2"
Type B double-wall vent (gas only)	1"
Type L double-wall vent (oil)	3"
Manufactured chimneys and vents list their clearances.	

8.10.2 Manufactured Chimneys

Manufactured metal chimneys have engineered parts that fit together in a prescribed way. Parts include: metal pipe, weight-supporting hardware, insulation shields, roof jacks, and chimney caps. One manufacturer's chimney may not be compatible with another's connecting fittings.

All-fuel chimneys (also called Class A chimneys) are used primarily for the solid fuels: wood and coal. All-fuel metal chimneys come in two types: insulated double-wall metal pipe and triple-wall metal pipe. Comply with the manufacturer's specifications when you install these chimneys.

All-fuel metal chimney: These chimney systems include transition fittings, support brackets, roof jacks, and chimney caps. The pipe is double-wall insulated or triple-wall construction.

Type-B vent double-wall pipe is permitted as a chimney for gas appliances. Type BW pipe is manufactured for gas space heaters in an oval shape to fit inside wall cavities.

Type L double-wall pipe is used for oil chimneys.

8.10.3 Chimney Terminations

Masonry chimneys and all-fuel metal chimneys should terminate at least three feet above the roof penetration and two feet above any obstacle within ten feet of the chimney outlet.

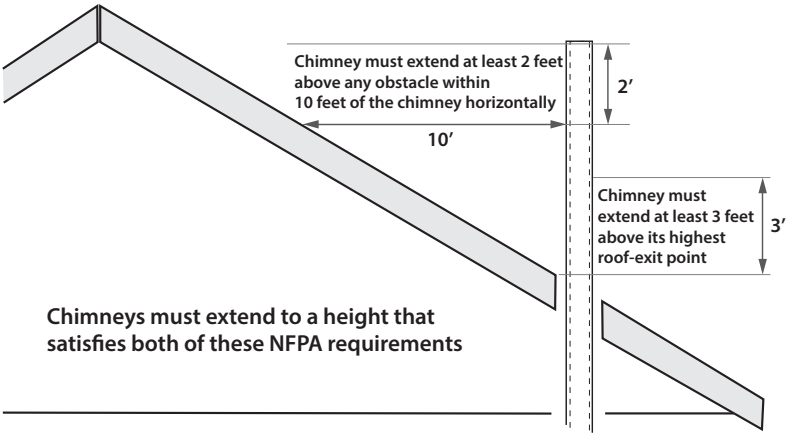

Chimney terminations: Should have vent caps and be given adequate clearance height from nearby building parts. These requirements are for both masonry chimneys and manufactured all-fuel chimneys.

B-vent chimneys can terminate as close as one foot above flat roofs and above pitched roofs up to a $^{6}/_{12}$ roof pitch. As the pitch rises, the minimum required termination height, as measured from the high part of the roof slope, rises as shown in this table.

Table 8-11: Roof Slope and B-Vent Chimney Height (ft)

flat-6/12	6/12-7/12	7/12-8/12	8/12-9/12	9/12-10/12	10/12-11/12	11/12-12/12	12/12-14/12	14/12-16/12	16/12-18/12
1'	1' 3"	1' 6"	2'	2' 6"	3' 3"	4'	5′	6'	7'

From *National Fuel Gas Code 2009*

8.10.4 Air Leakage through Masonry Chimneys

SWS Detail: 4.1001.3 Fireplace Chimney and Combustion Flue Vents

The existing fireplace damper or "airtight" doors seldom provide a good air seal. Help the customer decide whether the fireplace will be used in the future or whether it can be taken out of service. Consider these solutions for chimneys with ineffective or missing dampers.

- Install an inflatable chimney seal along with a notice of its installation to alert anyone wanting to start a fire to remove the seal first.
- Install an operable chimney-top damper and leave instructions on how to open and close it. Also notify users of which position is open and which is closed.
- Air seal the chimney top from the roof with a watertight, airtight seal. Also seal the chimney from the living space with foam board and drywall. If you install a permanent chimney seal such as this, post a notice at the fireplace saying that it is permanently disabled.

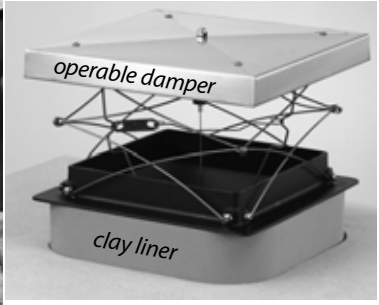

Reducing air leakage through masonry chimneys: You can seal a chimney off permanently, install an inflatable seal inside, or install a chimney-top damper from the outside to reduce air leakage through the chimney.

8.11 Special Venting Considerations for Gas

The American Gas Association (AGA) publishes a classification system for venting systems attached to natural-gas and propane appliances. This classification system assigns Roman numerals to four categories of venting based on whether there is positive or negative pressure in the vent and whether condensation is likely to occur in the vent.

AGA venting categories: The AGA classifies venting by whether there is positive or negative pressure in the vent and whether condensation is likely.

	Negative-pressure Venting	Positive-pressure
Non-condensing	I Combustion Efficiency **83% or less** Use standard venting: masonry or Type B vent	III Combustion Efficiency **83% or less** Use only pressurizable vent as specified by manufacturer
Condensing	II Combustion Efficiency **over 83%** Use only special condensing-service vent as specified by manufacturer	IV Combustion Efficiency **over 83%** Use only pressurizable condensing-service vent as specified by manufacturer

American Gas Association Vent Categories

A majority of gas appliances found in homes and multifamily buildings are Category I, which have negative pressure in their vertical chimneys. We expect no condensation in the vent connector or chimney.

Condensing furnaces are usually Category IV, have positive pressure in their vent, and condensation occurring in both the appliance and vent. Category III vents are rare, however a few fan-assisted furnaces and boilers vent their flue gases through airtight non-condensing vents. Category II vents are very rare and beyond the scope of this discussion.

8.11.1 Venting Fan-Assisted Furnaces and Boilers

Newer gas-fired fan-assisted central furnaces and boilers eliminate dilution air and may have slightly cooler flue gases compared to their predecessors. The chimney may experience more condensation than in the past. Inspect the existing chimney to verify that it's in good condition when considering replacing an old atmospheric unit. Reline the chimney when you see any of these conditions.

- When the existing masonry chimney is unlined.
- When the old clay or metal chimney liner is deteriorated.
- When the new furnace has a smaller input (BTUH) than the old one, the liner should be sized to the new furnace and the existing water heater.

B-vent chimney liner: Double wall Type-B vent is the most commonly available chimney liner and is recommended over flexible liners. Rigid stainless-steel single wall liners are also a permanent solution to deteriorated chimneys.

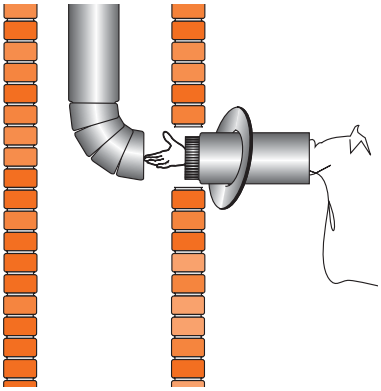

Liner Materials for 80+ Furnaces

For gas-fired 80+ AFUE furnaces, a chimney liner should consist of one of these four materials.

1. A type-B vent
2. A rigid or flexible stainless steel liner (preferably insulated)
3. A poured masonry liner
4. An insulated flexible aluminum liner

Chimney relining is expensive. Therefore consider a power-vented sealed-combustion unit when an existing chimney is inadequate for a new fan-assisted appliance.

Table 8-12: Characteristics of Gas Furnaces and Boilers

Annual Fuel Utilization Efficiency (AFUE)	Operating characteristics
70+	Category I, draft diverter, no draft fan, standing pilot, non-condensing, indoor combustion and dilution air.
80+	Category I, no draft diverter, fan-assisted draft, electronic ignition, indoor combustion air, no dilution air.
80+	Category III, horizontal fan-pressurized non-condensing vent, indoor combustion air, no dilution air.
90+	Category IV, no draft diverter, fan-assisted draft, low-temperature plastic venting, positive draft, electronic ignition, condensing heat exchanger, outdoor combustion air is strongly recommended.

8.12 Combustion Air

SWS Detail: 2.0203.1 Combustion Air for Natural Draft Appliances

A combustion appliance zone (CAZ) is classified as either an un-confined space or confined space. An un-confined space is a CAZ having the NFPA-required amount of room volume that is assumed to provide enough combustion air. A confined space is a CAZ with less than the NFPA-required amount of volume.

A confined space is defined by NFPA 54 as a room containing one or more combustion appliances that has less than 50 cubic feet of volume for every 1000 BTUH of appliance input.

For confined spaces, the NFPA 54 requires additional combustion air from outside the CAZ. Combustion air is supplied to the combustion appliance in four ways.

1. To an un-confined space through leaks in the building.
2. To a confined space through an intentional opening or openings between the CAZ and other indoor areas where air leaks replenish combustion air.
3. To a confined space through an intentional opening or openings between the CAZ and outdoors or ventilated intermediate zones like attics and crawl spaces.
4. Directly from the outdoors to the appliance. Appliances with direct combustion air supply are called sealed-combustion or direct vent appliances.

Important Note: The National Fuel Gas Code (NFPA 54 – 2009) presents two methods for calculating combustion air. The simplest of the two methods is discussed in this section. We discuss this method because mechanical inspectors often refer to it. However, neither method really predicts the amount of available combustion air.

The best way to evaluate the combustion air in an existing building with an existing combustion heating system is with an electronic combustion analysis. **If the oxygen reading from the combustion analyzer is more than 5%, this oxygen (O_2) measurement verifies that an adequate amount of combustion air is available.** At 5% or more of flue-gas oxygen, additional combustion air is usually unnecessary.

8.12.1 Un-Confined-Space Combustion Air

Combustion appliances located in most basements, attics, and crawl spaces get adequate combustion air from leaks in the building shell. Even when a combustion appliance is located within the home's living space, it gets adequate combustion air from air leaks, unless the house is airtight or the combustion zone is depressurized.

8.12.2 Confined-Space Combustion Air

A confined space is defined by NFPA 54 as a room containing one or more combustion appliances that has less than 50 cubic feet of volume for every 1000 BTUH of appliance input.

However, if a small mechanical room is connected to adjacent spaces through large air passages like floor-joist spaces, the CAZ may not need additional combustion air despite sheeted walls and a door separating the CAZ from other indoor spaces. You can measure the connection between the CAZ and other spaces by worst-case draft testing or blower door pressure testing.

When the home is unusually airtight (<0.20 ACHn), the CAZ may not have adequate combustion air, even when the combustion zone is larger than the minimum confined-space room volume.

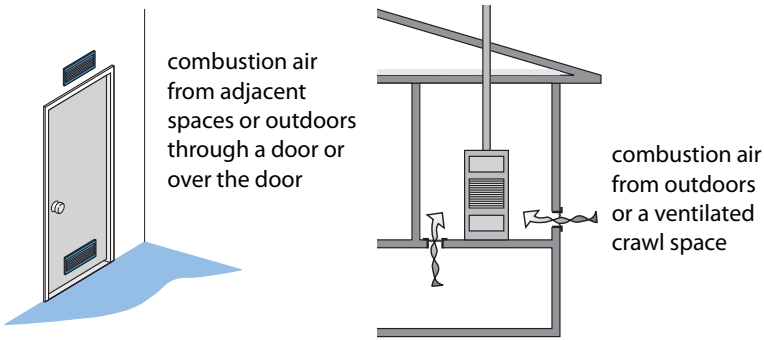

Passive combustion air options: Combustion air can be supplied from adjacent indoor spaces or from outdoors. Beware of passive combustion air vents into the attic that could depressurize the combustion zone or allow moist indoor air to travel into the attic. Also beware of taking combustion air from wet crawl spaces.

Combustion Air from Outdoors

In confined spaces or airtight homes where combustion appliances need outdoor combustion air, NFPA 54 prefers a single vent opening installed as low in the CAZ as practical. A combustion air vent into an attic may depressurize the CAZ and

deliver warm moist air from the CAZ into a cold attic. Instead, connect the combustion zone to a ventilated crawl space (if it's dry) or directly to the outdoors through a single low vent if possible.

For the intake, choose an outdoor location that is sheltered from prevailing winds, but not in an inside corner. Don't choose an exterior wall that is parallel to prevailing winds. Wind blowing parallel to the exterior wall or at a right angle to the vent opening de-pressurizes both the vent and the CAZ connected to it.

Table 8-13: Combustion Air Openings: Location and Size

Location	Dimensions
Two direct openings to adjacent indoor space	Minimum area each: 100 in^2 1 in^2 per 1000 BTUH each Combined room volumes must be ≥ 50 ft^3/1000 BTUH
Two direct openings or vertical ducts to outdoors	Each vent should have 1 in^2 for each 4000 BTUH
Two horizontal ducts to outdoors	Each vent should have 1 in^2 for each 2000 BTUH
Single direct or ducted vent to outdoors	Single vent should have 1 in^2 for each 3000 BTUH

From the *National Fuel Gas Code 2009 (NFPA 54)*

Net free area is smaller than actual vent area and takes the blocking effect of louvers and grilles into account. Metal grilles and louvers provide 60% to 80% of their area as net-free area while wood louvers provide only 20% to 25%. Combustion-air vents should be no less than 3 inches in their smallest dimension.

Example Combustion Air Calculation

Here is an example of one indoor space providing combustion air to another indoor space. The furnace and water heater are located in a confined space. The furnace has an input rating of

100,000 BTUH. The water heater has an input rating of 40,000 BTUH. Therefore, there should be 140 in^2 of net free area of vent between the mechanical room and other rooms in the home.

$$([100{,}000 + 40{,}000] \div 1{,}000) = 140 \times 1\ IN^2 = 140\ IN^2$$

Each vent should therefore have a minimum of 140 in^2 net free area. If a metal grille covers 60% of the opening's area, divide the 140 in^2 by 0.60.

$$140\ IN^2 / 0.6 = 233\ IN^2$$

8.13 Ducted Air Distribution

The forced-air system consists of an air handler (furnace, heat pump, air conditioner) with its heat exchanger along with attached ducts. The annual system efficiency of forced-air heating and air-conditioning systems depends on the following issues.

- Duct leakage
- System airflow
- Blower operation
- Balance between supply and return air
- Duct insulation levels

8.13.1 Sequence of Operations

The evaluation and improvement of ducts has a logical sequence of steps.

- ✓ Solve the airflow problems because a contractor might have to replace ducts or install additional ducts.
- ✓ Determine whether the ducts are located inside the thermal boundary or outside it.
- ✓ Evaluate the ducts' air leakage and decide whether duct-sealing is important and if so, find and seal the duct leaks.
- ✓ If supply ducts are outside the thermal boundary or if condensation is an air-conditioning problem, insulate the ducts.

8.13.2 Solving Airflow Problems

SWS Detail: 5.3003.3 Evaluating Air Flow

You don't need test instruments to discover dirty blowers or disconnected branch ducts. Find these problems before measuring

duct airflow, troubleshooting the ducts, or sealing the ducts. These steps precede airflow measurements.

1. Ask the customer about comfort problems and temperature differences in different rooms of the home.
2. Based on the customers comments, look for disconnected ducts, restricted ducts, and other obvious problems.
3. Inspect the filter(s), blower, and indoor coil for dirt. Clean them if necessary. If the indoor coil isn't easily visible, a dirty blower means that the coil is probably also dirty.
4. Look for dirty or damaged supply and return grilles that restrict airflow. Clean and repair them.
5. Look for closed registers or closed balancing dampers that could be restricting airflow to uncomfortable rooms.
6. Notice moisture problems like mold and mildew. Moisture sources, like a wet crawl space, can overpower air conditioners by introducing more moisture into the air than the air conditioner can remove.

Measuring Total External Static Pressure (TESP)

The blower creates the duct pressure, which is measured in inches of water column (IWC) or pascals. The return static pressure is negative and the supply static pressure is positive. Total external static pressure (TESP) is the sum of the absolute values of the supply and return static pressures. Absolute value means that you ignore the positive or negative signs when adding supply static pressure and return static pressure to get TESP. This addition represents the distance on a number line as shown in the illustration here.

TESP number line: the TESP represents the distance on a number line between the return and supply ducts.

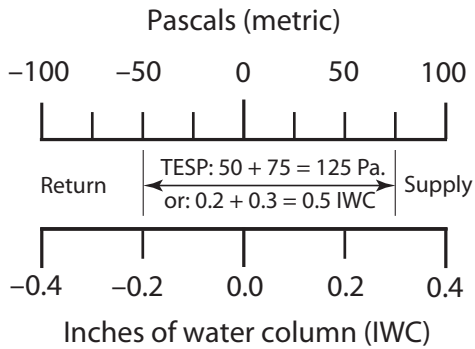

TESP gives a rough indicator of whether airflow is adequate. The greater the TESP, the less the airflow. The supply and return static pressures by themselves can indicate whether the supply or the return or both sides are restricted. For example, if the supply static pressure is 0.10 IWC (25 pascals) and the return static pressure is –0.5 IWC (-125 pascals), you can assume that most of the airflow problems are due to a restricted or under-sized return. The TESP give a rough estimate of airflow if the manufacturer's graph or table for static pressure versus airflow is available.

1. Attach two static pressure probes to tubes leading to the two ports of the manometer. Attach the high-side port to the probe inserted downstream of the air handler in the supply duct. The other tube goes upstream of the air handler in the return duct. The manometer adds the supply and return static pressures to measure TESP.
2. Consult manufacturer's literature for a table of TESP versus airflow for the blower or the air handler. Find airflow for the TESP measured in Step 1.
3. Measure pressure on each side of the air handler to obtain both supply and return static pressures separately. This test helps to locate the main problems as related to either the supply or the return.

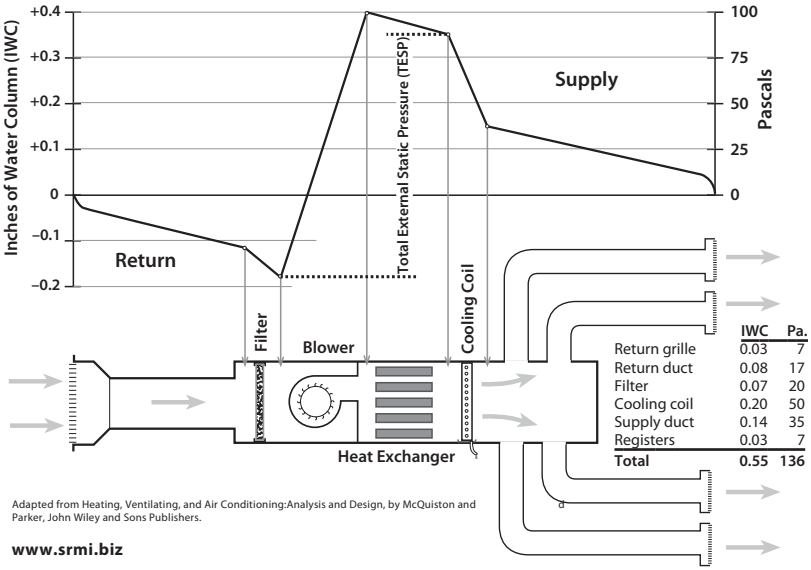

Visualizing TESP: The blower creates a suction at its inlet and a positive pressure at its outlet. As the distance between the measurement and blower increase, pressure decreases because of the system's lower resistance.

Static Pressure Guidelines

Air handlers deliver their airflow at TESPs ranging from 0.30 IWC (75 Pascals) to 1.0 IWC (250 Pascals) as found in the field. Manufacturers maximum recommended static pressure is usually a maximum 0.50 IWC (125 pascals) for standard air handlers. TESPs greater than 0.50 IWC indicate inadequate airflow in standard residential forced-air systems.

The popularity of pleated filters, electrostatic filters, and high-static high-efficiency evaporator coils, prompted manufacturers to introduce premium air handlers that can deliver adequate airflow at a TESPs of greater than 0.50 IWC (125 pascals). Premium residential air handlers can provide adequate airflow with TESPs of up to 0.90 IWC (225 pascals) because of their more powerful blowers and variable-speed blowers. TESPs greater than 0.90 IWC indicate the possibility of inadequate airflow in these premium residential forced-air systems.

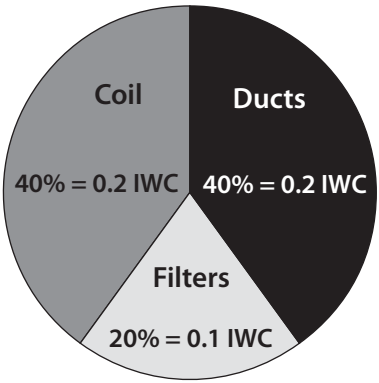

Static pressure budget: Typical static pressures in IWC and % for a marginally effective duct system.

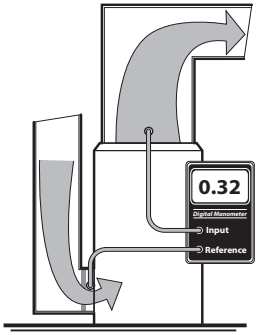

Total external static pressure (TESP): The positive and negative pressures created by the resistance of the supply and return ducts produces TESP. The measurement shown here simply adds the two static pressures without regard for their signs. As TESP increases, airflow decreases. Numbers shown below are for example only.

Table 8-14: Total External Static Pressure Versus System Airflow for a Particular System

TESP (IWC)	0.30	0.40	0.50	0.60	0.70	0.80
CFM	995	945	895	840	760	670

Example only

8.13.3 Unbalanced Supply-Return Airflow Test

Closing interior doors often separates supply registers from return registers in homes with central returns. A bedroom door with no return register and a closed door restricts the bedroom air from returning to the air handler. This restriction pressurizes bedrooms and depressurizes the central areas near return registers. These pressures can drive air leakage through the building

shell, create moisture problems, and bring pollutants in from the crawl space, garage, or CAZ.

The following test uses only the air handler and a digital manometer to evaluate whether the supply air can flow back to the return registers relatively unobstructed. Activate the air handler and close interior doors.

1. Measure the pressure difference between the home's central living area and the outdoors with a digital manometer.
2. Measure the bedrooms' pressure difference with reference to outdoors.

If the sum of these two measurements is more than 3.0 pascals with the air handler operating, pressure relief is desirable. Like TESP, disregard the positive or negative signs, and add the absolute values.

- Or, you can measure the pressure difference between the central zone and the bedroom as shown in the next illustration.

To estimate the amount of pressure relief needed, slowly open the bedroom door until the pressure difference drops below 1 pascal.

Estimate the surface area of that door opening. This is the area of the permanent opening required to provide pressure relief. Pressure relief may include undercutting the door or installing transfer grilles or jumper ducts.

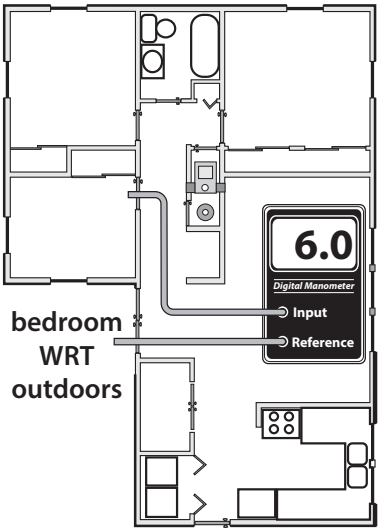

Pressurized bedrooms: Bedrooms with supply registers but no return register are pressurized when the air handler is on and the doors are closed. Pressures this high can double or triple air leakage through the building shell.

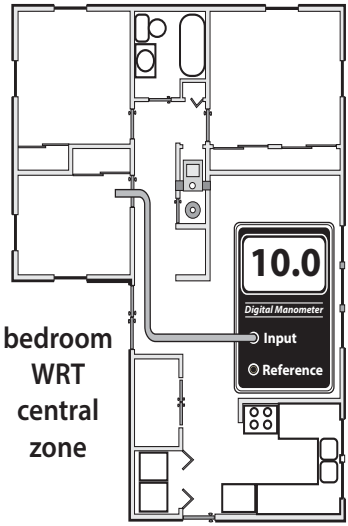

Pressure difference bedroom to central zone: The air handler depressurizes the central zone and pressurizes the bedroom, when the bedroom doors are closed. This test measures the pressure difference.

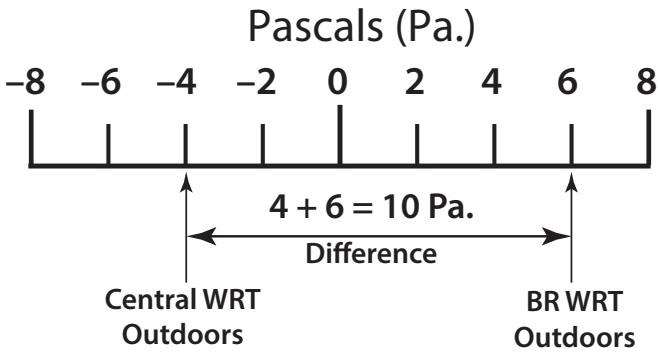

Measuring unbalanced airflow: The distance on a number line represents the difference in pressure between the central zone and the bedroom.

8.13.4 Evaluating Furnace Performance

The effectiveness of a furnace depends on its temperature rise, fan-control temperatures, and flue-gas temperature. For efficiency, you want a low temperature rise. However, you must maintain a minimum flue-gas temperature to prevent corrosion in the venting of 70+ and 80+ AFUE furnaces. Apply the following furnace-operation standards to maximize the heating system's seasonal efficiency and safety.

- ✓ Perform a combustion analysis as described in *"Gas Burner Safety & Efficiency Service" on page 264*.
- ✓ Check temperature rise after 5 minutes of operation. Refer to manufacturer's nameplate for acceptable temperature rise (supply temperature minus return temperature). The temperature rise should be between 40°F and 70°F with the lower end of this scale being preferable for energy efficiency.
- ✓ Verify that the fan-off temperature is between 95° and 105° F. The lower end of this scale is preferable for maximum efficiency.
- ✓ Verify that the fan-on temperature is 120–140° F. The lower the better.

Table 8-14: Furnace Operating Parameters

Inadequate temperature rise: condensation and corrosion possible.	Temperature rise OK for both efficiency and avoidance of condensation.	Temperature is excessive: Check fan speed, heat exchanger and ducts.

20° 45° 70° 95°

Temperature Rise = Supply Temperature – ReturnTemperature

Excellent fan-off temperature if comfort is acceptable.	Bor derline acceptable: Consider replacing fan control.	Unacceptable range: Significant savings possible by adjusting or replacing fan control.

85° 100° 115° 130°

Fan-off Temperature

Ex cellent fan-on temperature range: No change needed.	Fair: Consider fan-control replacement if fan-off temperature is also borderline.	Poor: Adjust or replace fan control.

100° 120° 140° 160°

Fan-on Temperature

- ✓ With time-activated fan controls, verify that the fan is switched on within two minutes of burner ignition and is switched off within 2.5 minutes of the end of the combustion cycle.
- ✓ Verify that the high limit controller shuts the burner off before the furnace temperature reaches 200°F.
- ✓ Verify that there is a strong noticeable airflow from all supply registers.
- ✓ Adjust fan control to conform to these standards, or replace the fan control if adjustment fails. Some fan controls aren't adjustable.
- ✓ Adjust the high limit control to conform to the above standards, or replace the high limit control.
- ✓ All forced-air heating systems must deliver supply air and collect return air only from inside the intentionally heated

portion of the house. Taking return air from an un-heated area of the house such as an unconditioned basement or a crawl space isn't acceptable.

Troubleshooting Temperature Rise

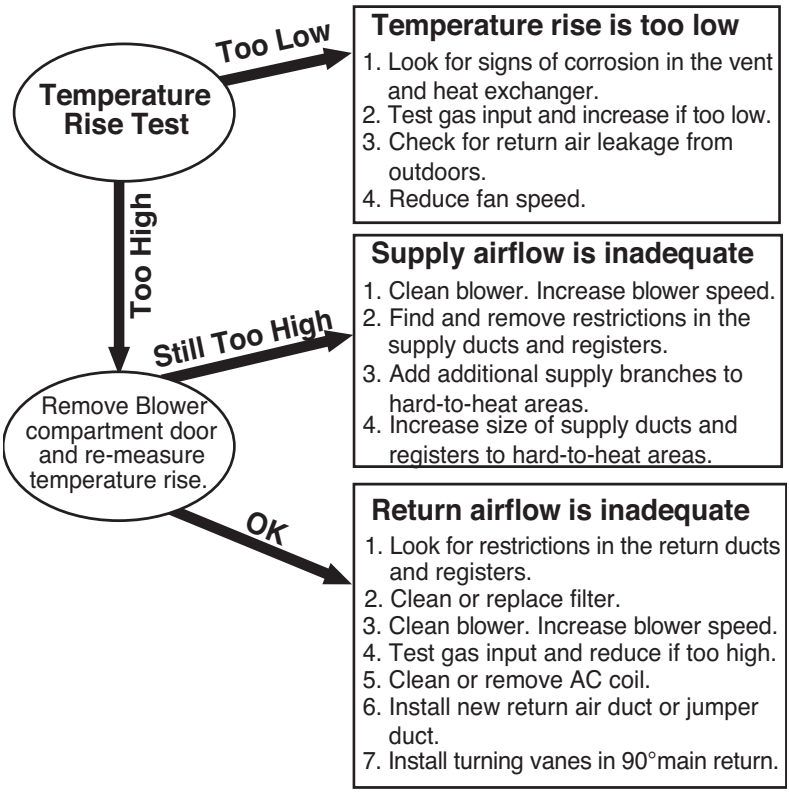

8.13.5 Improving Forced-Air System Airflow

Inadequate airflow is a common cause of comfort complaints. When the air handler is on there should be a strong flow of air out of each supply register. Low register airflow may mean that a branch duct is blocked or separated, or that return air from the room to the air handler isn't sufficient. When low airflow is a

problem, consider specifying the following improvements as appropriate from your inspection.

- ✓ Clean or change filter. Select a less restrictive filter if you need to reduce static pressure substantially.
- ✓ Clean air handler's blower.
- ✓ Clean air-conditioning or heat pump coil.
- ✓ Clean the air-conditioning coil. If the blower is dirty, the coil is probably also dirty.
- ✓ Increase blower speed.
- ✓ Make sure that balancing dampers to rooms that need more airflow are wide open.
- ✓ Lubricate blower motor, and check tension on drive belt.

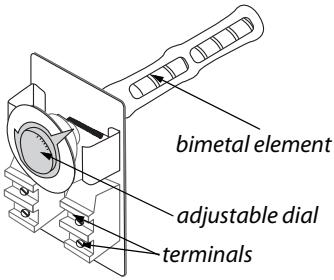

Fan/limit control: Turns the furnace blower on and off, according to temperature. Also turns the burner off if the heat exchanger gets too hot.

Duct Improvements to Increase Airflow

Consider specifying the following duct changes to increase system airflow and reduce the imbalance between supply and return.

- ✓ Modify the filter installation to allow easier filter changing, if filter changing is currently difficult.
- ✓ Install a slanted filter bracket assembly or a enlarged filter fitting to accommodate a larger filter with more surface area and less static-pressure drop than the existing filter.

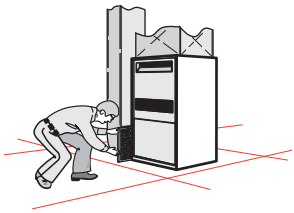

Panel filter installed in filter slot in return plenum

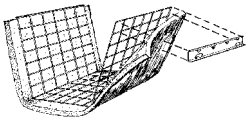

Washable filter installed on a rack inside the blower compartment.

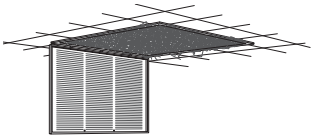

Panel filter installed in return register

Air-handler filter location: Filters are installed on the return-air side of forced air systems. Look for them in one or more of the above locations.

- ✓ Remove obstructions to registers and ducts such as rugs, furniture, and objects placed inside ducts, such as children's toys and water pans for humidification.
- ✓ Remove kinks from flex duct, and replace collapsed flex duct and fiberglass duct board.
- ✓ Remove excessive lengths of slacking flex duct, and stretch the duct to enhance airflow.
- ✓ Perform a Manual D sizing evaluation to evaluate whether to replace branch ducts that are too small.
- ✓ Install additional supply ducts and return ducts as needed to provide heated air throughout the building, especially in additions to the building.
- ✓ Undercut bedroom doors, especially in homes without return registers in bedrooms.
- ✓ Repair or replace bent, damaged, or restricted registers. Install low-resistance registers and grilles.

8.14 Evaluating Duct Air Leakage

Duct leakage is a major energy-waster in homes where the ducts are located outside the home's thermal boundary in a crawl space, attic, attached garage, or leaky unconditioned basement. When these intermediate zones remain outside the thermal boundary, duct sealing is usually cost-effective.

Duct leakage within the thermal boundary isn't usually a significant energy problem.

8.14.1 Troubleshooting Duct Leakage

There are several simple procedures for finding the locations of the duct leaks and evaluating their severity.

Finding Duct Leaks Using Touch and Sight

One of the simplest ways of finding duct leaks is feeling with your hand for air leaking out of supply ducts, while the ducts are pressurized by the air handler's blower. Duct leaks can also be located using light. Use one of these 4 tests to locate air leaks.

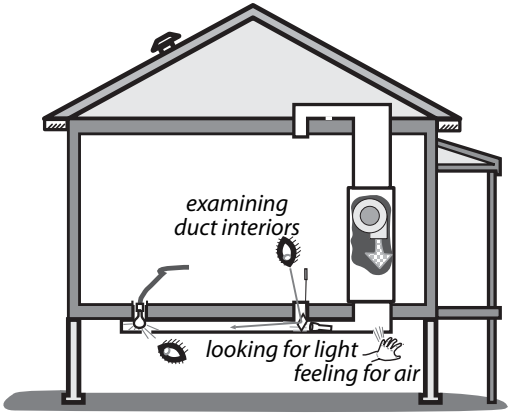

Finding duct air leaks: Finding the exact location of duct leaks precedes duct air sealing.

1. Use the air handler blower to pressurize supply ducts. Closing the dampers on supply registers temporarily or partially blocking the register with pieces of carpet, magazines, or any object that won't be blown off by the

register's airflow increases the duct pressure and make duct leaks easier to find. Dampening your hand makes your hand more sensitive to airflow, helping you to find duct air leaks.

2. Place a trouble light, with a 100-watt bulb, inside the duct through a register. Look for light emanating from the exterior of duct joints and seams.
3. Determine which duct joints were difficult to fasten and seal during installation. These joints are likely duct-leakage locations.
4. Use a trouble light, flashlight, and mirror or a digital camera to help you to visually examine duct interiors.

Feeling air leaks establishes their exact location. Ducts must be pressurized in order to feel leaks. You can feel air leaking out of pressurized ducts, but you can't feel air leaking into depressurized return ducts. Pressurizing the home with a blower door forces air through duct leaks, located in intermediate zones, where you can feel the leakage coming out of both supply and return ducts.

Pressure Pan Testing

Pressure pan tests can identify leaky or disconnected ducts located in intermediate zones. With the house depressurized by the blower door to either –25 pascals or –50 pascals, make pressure pan readings at each supply and return register.

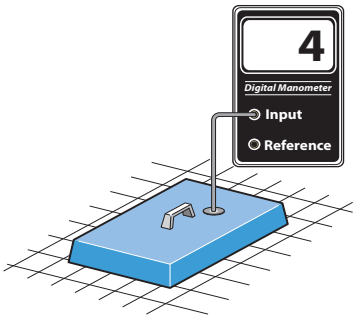

A pressure pan: Blocks a single register and measures the air pressure behind it, during a blower door test. The magnitude of that pressure is an indicator of duct leakage.

If the ducts are in a basement and the basement is conditioned, pressure pan testing isn't necessary, although air sealing the return ducts for safety is still important.

If instead, the basement is unconditioned, open a window or door between the basement and outdoors. Close any door or hatch between conditioned spaces and basement during pressure pan testing.

1. Install blower door and set-up house for winter conditions. Open all interior doors.
2. If the basement is conditioned living space, open the door between the basement and upstairs living spaces. If the basement isn't conditioned living space, close the door between basement and upstairs, and open a basement window.
3. Turn furnace off at the thermostat or main switch. Remove furnace filter, and tape filter slot if one exists. Be sure that all grilles, registers, and dampers are fully open.
4. Temporarily seal any outside fresh-air intakes to the duct system.
5. Seal supply registers in unoccupied zones that aren't intended to be heated — an unconditioned basement or crawl space, for example.
6. Open attics, crawl spaces, and garages as much as possible to the outdoors so they don't create a secondary air barrier.
7. Connect hose between pressure pan and the input tap on the digital manometer. Leave the reference tap open.
8. With the blower door's manometer reading –25 or –50 pascals, place the pressure pan completely over each grille or register one by one to form a tight seal. Leave all other grilles and registers open when making a test.

Record each reading, which should give a positive pressure.

9. If a grille is too large or a supply register is difficult to cover with the pressure pan (under a kitchen cabinet, for example), seal the grille or register with masking tape. Insert a pressure probe through the masking tape and record the reading. Remove the tape after the test.
10. Use either the pressure pan or tape to test each register and grille in a systematic way.

Pressure Pan Duct Standards

If the ducts are perfectly sealed with no leakage to the outdoors, you won't measure any pressure difference (0.0 pascals) during a pressure-pan test. The higher the measured pressure reading, the more connected the duct is to the outdoors.

- If the median pressure pan reading is 4 pascals or more and/or if one reading is more than 8 pascals, duct-sealing is usually cost-effective.
- Following duct-sealing work, no more than three registers should have pressure-pan readings greater than 2 pascals. No single reading should be greater than 4 pascals.
- The reduction you achieve depends on your ability to find the leaks and whether you can access the leaky ducts. The best weatherization agencies use 1 pascal or less as a general goal for all registers.

Examine the registers connected to ducts that are located in areas outside the conditioned living space. Unconditioned spaces containing ducts include attics, crawl spaces, garages, and unoccupied basements. Also evaluate registers attached to stud cavities or panned joists used as return ducts. Leaky ducts, located outside the conditioned living space, may lead to pressure-pan measurements more than 30 pascals if the ducts have large holes.

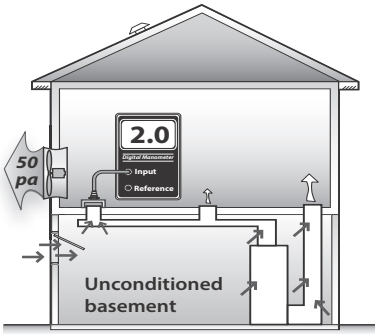

Pressure pan test: A pressure pan reading of 2 indicates moderate duct air leakage in the supply ducts.

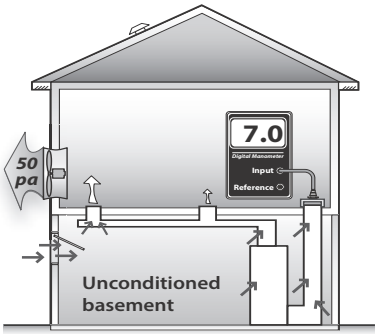

Problem return register: A pressure reading of 7 pascals indicates major air leakage near the tested register.

8.14.2 Measuring Duct Air Leakage with a Duct Blower

Pressurizing the ducts with a duct blower measures total duct leakage. The duct blower is the most accurate common measuring device for duct air leakage. It consists of a fan, a digital manometer or set of analog manometers, and a set of reducer plates for measuring different leakage levels. Using a blower door with a duct blower measures leakage to outdoors.

Measuring Total Duct Leakage

The total duct leakage test measures leakage to both indoors and outdoors. The house and intermediate zones should be open to the outdoors by way of windows, doors, or vents. Opening the intermediate zones to outdoors insures that the duct blower is measuring only the ducts' airtightness — not the airtightness of ducts combined with other air barriers like roofs, foundation walls, or garages.

Supply and return ducts can be tested separately, either before the air handler is installed in a new home or when an air handler is removed during replacement.

Follow these steps when performing a duct airtightness test.

1. Install the duct blower in the air handler or to a large return register, either using its connector duct or simply attaching the duct blower itself to the air handler or return register with cardboard and tape.
2. Remove the air filter(s) from the duct system.
3. Seal all supply and return registers with masking tape or other non-destructive sealant.
4. Open the house, basement or crawl space, containing ducts, to outdoors.
5. Drill a $^{1}/_{4}$ or $^{5}/_{16}$-inch hole into a supply duct a short distance away from the air handler and insert a manometer hose. Connect a manometer to this hose to measure *duct with reference to (WRT) outdoors*. (Indoors, outdoors, and intermediate zones should ideally be opened to each other in this test).
6. Connect an airflow manometer to measure *fan WRT the area near the fan*.

Check manometer(s) for proper settings. Digital manometers require your choosing the correct mode, range, and fan-type settings.

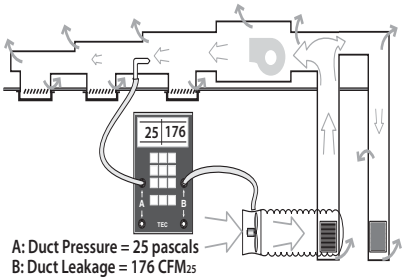

Total duct air leakage measured by the duct blower: All registers are sealed except the one connecting the duct blower to the system. Pressurize the ducts to 25 pascals and measure airflow.

1. Turn on the duct blower and pressurize the ducts to 25 pascals.
2. Record duct-blower airflow.

3. While the ducts are pressurized, start at the air handler and move outward feeling for leaks in the air handler, main ducts, and branches.
4. After testing and associated air-sealing are complete, restore filter(s), remove seals from registers, and check air handler.

Measuring Duct Leakage to Outdoors

Measuring duct leakage to outdoors gives you a duct-air-leakage value that is directly related to energy waste and the potential for energy savings.

1. Set up the home in its typical heating and cooling mode with windows and outside doors closed. Open all indoor conditioned areas to one another.
2. Install a blower door, configured to pressurize the home.
3. Connect the duct blower to the air handler or to a main return duct.
4. Pressurize the ducts to +25 pascals by increasing the duct blower's speed until this value is reached.
5. Pressurize the house until the pressure difference between the house and duct is 0 pascals (*house WRT ducts*). *See "Blower-Door Test Procedures" on page 459.*
6. Read the airflow through the duct blower. This value is duct leakage to outdoors.

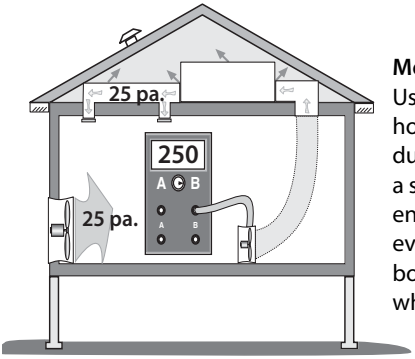

Measuring duct leakage to outdoors: Using a blower door to pressurize the house with a duct blower to pressurize the ducts measures leakage to the outdoors — a smaller number and a better predictor of energy savings. This test is preferred for evaluating duct leakage for specialists in both shell air leakage and duct air leakage whenever a blower door is available.

8.14.3 Measuring House Pressure Caused by Duct Leakage

The following test measures pressure differences between the house and outdoors, caused by duct leakage. Try to correct pressure differences greater than +2.0 pascals or more negative than –2.0 pascals because of the shell air leakage that the pressure differences create.

1. Close all windows and exterior doors. Turn-off all exhaust fans.
2. Open all interior doors, including door to basement.
3. Measure the baseline house-to-outdoors pressure difference and zero it out using the baseline procedures described in *"Blower-Door Test Procedures" on page 459*.
4. Turn on air handler.
5. Measure the house-to-outdoors pressure difference. This test indicates dominant duct leakage as shown here.

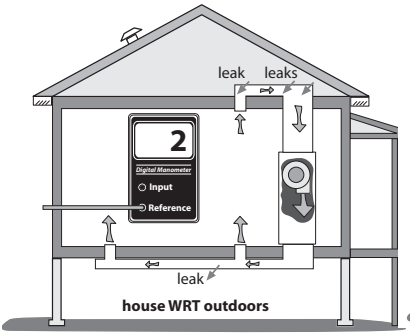

Dominant return leaks: When return leaks are larger than supply leaks, the house shows a positive pressure with reference to the outdoors.

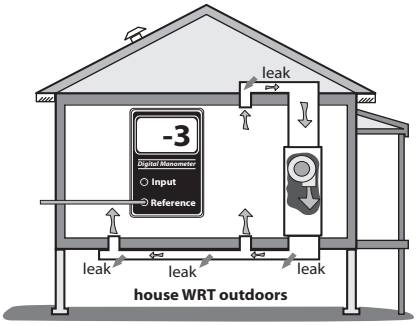

Dominant supply leaks: When supply leaks are larger than return leaks, the house shows a negative pressure with reference to the outdoors.

A positive pressure indicates that the return ducts (which pull air from leaky intermediate zones) are leakier than the supply ducts. A negative pressure indicates that the supply ducts (which push air into intermediate zones through their leaks) are leakier than return ducts. A pressure at or near zero indicates equal supply and return leakage or else little duct leakage.

8.15 Sealing Duct Leaks

Ducts located outside the thermal boundary or in an intermediate zone like a ventilated attic or crawl space should be sealed. The following is a list of duct leak locations in order of their relative importance. Leaks nearer to the air handler are exposed to higher pressure and are more important than leaks further away.

8.15.1 Sealing Return Ducts

SWS Detail: 3.1602.1 Air Sealing Duct System, 3.1602.5 Return—Framed Platform, 3.1602.4 Air Sealing System Components, 3.1602.7 Return and Supply Plenums in Basements and Crawl Spaces

Return leaks are important for combustion safety and for efficiency. Use the following techniques to seal return ducts.

- ✓ First, seal all return leaks within the combustion zone to prevent this leakage from depressurizing the combustion zone and causing backdrafting.
- ✓ Seal panned return ducts using mastic to seal all cracks and gaps within the return duct and register.
- ✓ Seal leaky joints between building materials composing cavity return ducts, like panned floor cavities and furnace return platforms. Remove the panning to seal cavities containing joints in building materials.
- ✓ Carefully examine and seal leaks at transitions between panned floor joists and metal trunks that change the direction of the return ducts. You may need a mirror to find some of the biggest return duct leaks in these areas.
- ✓ Seal filter slots with duct tape to allow removal for easy changing of filters.
- ✓ Seal the joint between the furnace and return plenum with silicone caulking or foil tape.

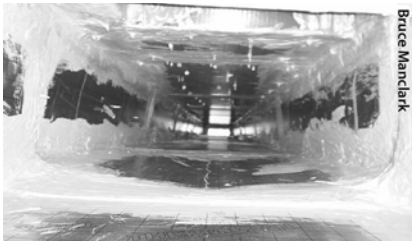

Lining a panned cavity: Foil-faced foam board, designed for lining cavities is sealed with duct mastic to provide an airtight return.

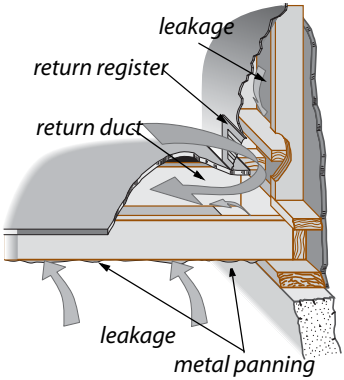

Panned floor joists: These return ducts are often very leaky and may require removing the panning to seal the cavity.

Panned floor joists: These return ducts are often very leaky and may require removing the panning to seal the cavity.

8.15.2 Sealing Supply Ducts

SWS Detail: 3.1602.1 Air Sealing Duct System, 3.1602.5 Return—Framed Platform, 3.1602.4 Air Sealing System Components, 3.1602.7 Return and Supply Plenums in Basements and Crawl Spaces, 3.1601.3 Support

Inspect these places in the duct system and seal them as needed.

- ✓ *Plenum joint at air handler:* Technicians might have had problems sealing these joints because of a lack of space. Seal these plenum connections thoroughly even if you

must cut an access hole in the plenum. Use silicone caulking or foil tape instead of mastic and fabric mesh here for future access — furnace replacement, for example.

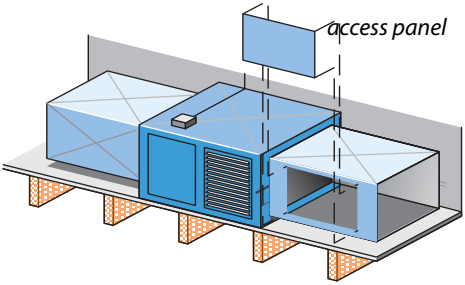

Plenums, poorly sealed to air handler: When air handlers are installed in tight spaces, plenums may be poorly fastened and sealed. Cutting a hole in the duct may be the only way to seal this important joint.

Sectioned elbows: Joints in sectioned elbows, known as gores, are usually leaky and require sealing with duct mastic.

- ✓ *Joints at branch takeoffs:* Seal these important joints with a thick layer of mastic. Fabric mesh tape should cover gaps and reinforce the seal at gaps.
- ✓ *Joints in sectioned elbows:* Known as gores, these are usually leaky and require sealing with duct mastic.
- ✓ *Tabbed sleeves:* Attach the sleeve to the main duct with 3-to-5 screws and apply mastic plentifully. Or better, remove the tabbed sleeve and replace it with a manufactured takeoff.
- ✓ *Flexduct-to-metal joints:* Apply a 2-inch band of mastic to the end of the metal connector. Attach the flexduct's inner liner with a plastic strap, tightening it with a strap tensioner. Attach the insulation and outer liner with another strap.
- ✓ *Damaged flex duct:* Replace flex duct when it is punctured, deteriorated, or otherwise damaged.

- ✓ *Deteriorating ductboard facing:* Replace ductboard, preferably with metal ducting, when the facing deteriorates because this deterioration leads to a lot of air leakage.

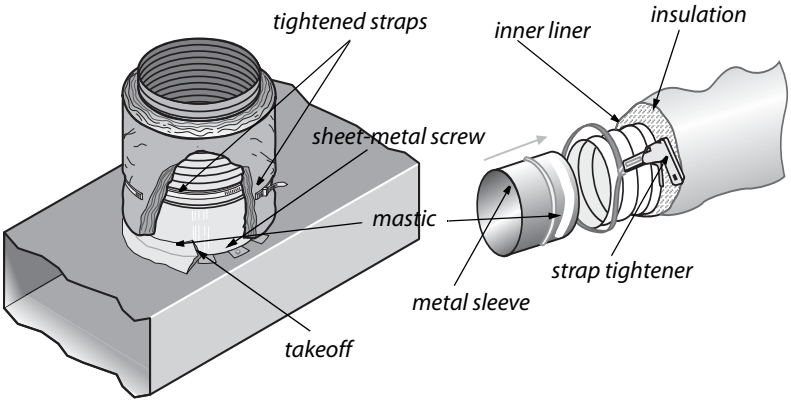

Flexduct joints: Flexduct itself is usually fairly airtight, but joints, sealed improperly with tape, can be very leaky. Use methods shown here to make flexduct joints airtight.

- ✓ Consider closing supply and return registers in unoccupied basements or crawl spaces.
- ✓ Seal penetrations made by wires or pipes traveling through ducts.
- ✓ Seal the joint between the boot and the ceiling, wall, or floor between conditioned and unconditioned areas.
- ✓ Support the ducts and duct joints with duct hangers at least every 5 feet or as necessary to prevent sagging of more than one-half inch.

Sealing register boots: Seal between the boot and floor. Seal joints inside the boot.

8.15.3 Materials for Duct Sealing

Duct mastic is the best duct-sealing material because of its superior durability and adhesion. Apply mastic at least $^{1}/_{16}$-inch thick, and use reinforcing mesh for all joints wider than $^{1}/_{8}$-inch or joints that may move. Install screws to prevent joint movement or separation.

Aluminum foil or cloth duct tape aren't good materials for duct sealing because their adhesive often fails. Consider covering tape with mastic to prevent tape's adhesive from drying out and failing.

8.16 Duct Insulation

SWS Detail: 4.1601.1 Insulating Flex Ducts, 4.1601.2 Insulating Metal Ducts

Insulate supply ducts that are installed in unconditioned areas outside the thermal boundary such as crawl spaces, attics, and attached garages with vinyl- or foil-faced duct insulation. Don't insulate ducts that run through conditioned areas unless they cause overheating in winter or condensation in summer. Use these best practices for installing insulation.

- ✓ Always perform necessary duct sealing before insulating ducts.
- ✓ Duct-insulation R-value must be ≥R-8.

✓Insulation should cover all exposed supply ducts, with no significant areas of bare duct left uninsulated.

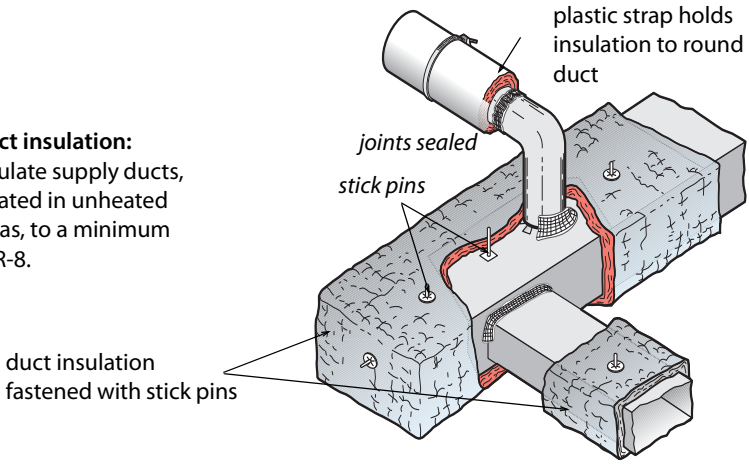

Duct insulation: Insulate supply ducts, located in unheated areas, to a minimum of R-8.

✓Insulation's compressed thickness must be more than 75% of its uncompressed thickness. Don't compress duct insulation excessively at corner bends.

✓Fasten insulation using mechanical means such as stick pins, twine, staples, or plastic straps.

✓ Cover the insulation's joints with tape to stop air convection. However, tape often falls off if the installer expects tape to support the insulation's weight.

✓ Install the duct insulation 3 inches away from heat-producing devices such as recessed light fixtures.

Caution: Burying ducts in attic insulation is common in some regions and it reduces energy losses from ducts. However, condensation on ducts in humid climates is common during the air-conditioning season, so allow cellulose to come in contact with metal ducts.

Important Note: Tape can be effective for covering joints in the insulation to prevent air convection, but the tape fails when expected to resist the force of the insulation's compression or

weight. Outward-clinch staples can help hold the insulation facing and tape together.

8.16.1 Spray Foam Duct Insulation

SWS Details: 3.1602.2 Duct Spray Polyurethane Foam (SPF) Installation

High-density spray foam insulation is also a good duct-insulation option, assuming it is listed as ASTM E-84 or UL 723. Spray foam is particularly helpful in areas where the foam can seal seams and insulate in one application. However, the spray foam application is limited by space around the duct to a greater amount than wrapping with fiberglass blankets.

8.17 Hot-Water Space-Heating Distribution

The most significant energy wasters in hot-water systems are poor steady-state efficiency, off-cycle flue losses stealing heat from the stored water, and boilers operating at a too-high water temperature. For information about boiler installation, *see page 254.*

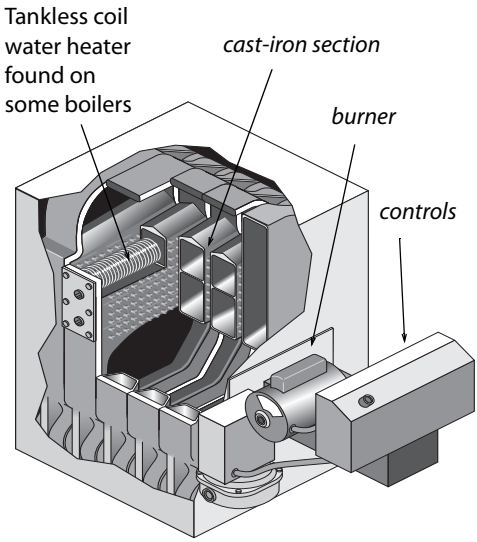

Cast-iron sectional boilers: The most common boiler type for residential applications.

8.17.1 Boiler Efficiency and Maintenance

Monitor boiler performance and efficiency in the following ways.

- Corrosion, scaling, and dirt on the water side of the heat exchanger.
- Corrosion, dust, and dirt on the fire side of the heat exchanger.
- Excess air during combustion from air leaks and incorrect fuel-air mixture.
- Off-cycle air circulation through the firebox and heat exchanger, removing heat from stored water.

Boiler Efficiency Improvements

Consider the following maintenance and efficiency improvements for both hot-water and steam boilers based on boiler inspection.

- ✓ Check for leaks on the boiler, around its fittings, or on any of the distribution piping connected to the boiler.
- ✓ Clean fire side of heat exchanger of noticeable dirt.
- ✓ Drain water from the boiler drain until the water flows clean.

8.17.2 Distribution System Improvements

SWS Details: 5.3104.2 Maintenance: Gas Boiler Service Inspection

Hydronic distribution systems consist of the supply and return piping, the circulator, expansion tank, air separator, air vents, and heat emitters. A properly designed and installed hydronic distribution system can operate for decades without service. However, many systems have installation flaws or need service.

Note: You can recognize a hot-water boiler by its expansion tank, located somewhere above the boiler. The expansion tank provides an air cushion to allow the system's water to expand and contract as it is heated and cooled. Without a functioning expansion tank excessive pressure in the boiler discharges water through the pressure-relief valve.

Safety Checks and Improvements

Work with contractors and technicians to specify and verify the following safety and efficiency tests and inspections.

- Verify the existence of a 30-psi-rated pressure-temperature (P&T) relief valve. The P&T relief valve should have a drain pipe that terminates 6 inches from the floor. Replace a malfunctioning valve or add a P&T relief valve if none exists.

Look for signs of leakage or discharges. Find out why the relief valve is discharging.

- Verify that the expansion tank isn't waterlogged or too small for the system. A non-operational expansion tank can cause the pressure-relief valve to discharge. Measure the expansion tank's air pressure. The pressure should be one (1) psi per 2.3 feet of the distribution system's height.
- If you observe rust in venting, verify that the return water temperature is warmer than 130° F for gas and warmer than 140° F for oil. These minimum water temperatures prevent acidic condensation.
- Verify that high-limit control disengages the burner at a water temperature of 200°F or less.
- Lubricate circulator pump(s) if necessary.

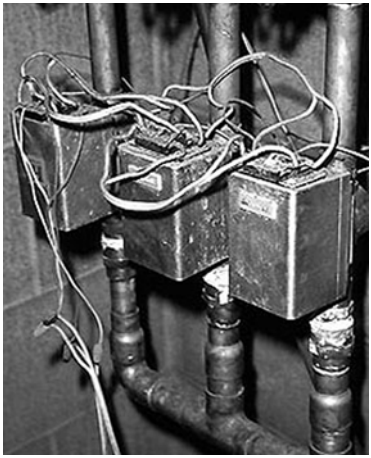

Zone valves: Separate thermostats control each zone valve. Zone valves have switches that activate the burner.

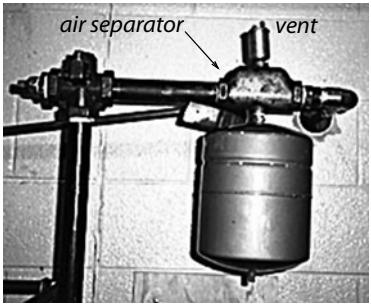

Expansion tank, air separator, and Vent: Preventing excessive pressure and eliminating air from the systems are important for hydronic distribution systems.

Simple Efficiency Improvements

Do the following energy-efficiency improvements.

✓ Repair water leaks in the system.

- ✓ Remove corrosion, dust, and dirt on the fire side of the heat exchanger.
- ✓ Check for excess air during combustion from air leaks and incorrect fuel-air mixture.
- ✓ Bleed air from radiators and piping through air vents on piping or radiators. Most systems fill automatically through a shutoff and pressure-reducing valve (PRV) connected to the building's water supply. If there is a shutoff and no PRV, open the shutoff during air-purging and close it afterwards. Then check the system pressure at the expansion tank and adjust the pressure as necessary.

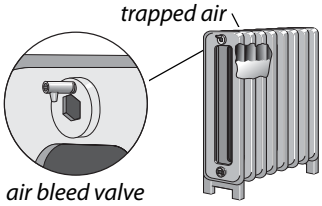

Purging air: Trapped air collects at the hot-water system's highest parts. Bleeding air from radiators fills the radiator and gives it more heating surface area.

- ✓ Vacuum and clean fins of fin-tube convectors if you notice dust and dirt there.
- ✓ Insulate all supply and return piping, passing through unheated areas, with foam pipe insulation, at least one-inch thick, rated for temperatures up to 200° F.

Improvements to Boiler Controls

Consider these improvements to control systems for hot-water boilers.

- ✓ Install outdoor reset controllers to regulate water temperature, depending on outdoor temperature.
- ✓ If possible, operate the boiler without a low-limit control for maintaining a minimum boiler-water temperature. If the boiler heats domestic water in addition to space heating, the low-limit control may be necessary.

- ✓ After control improvements like two-stage thermostats or reset controllers, verify that return water temperature is high enough to prevent condensation and corrosion in the chimney as noted previously.
- ✓ Install electric vent dampers on atmospheric gas- and oil-fired high-mass boilers.

8.18 Steam Heating and Distribution

Steam heating is less efficient than hot-water heating because steam requires higher temperatures than hot water. For single-family homes, consider replacing a steam heating system with a hot-water or forced-air system. Multifamily buildings, especially multi-story buildings, may have little choice but to continue with steam because of the high cost of switching systems.

Note: You can recognize a steam boiler by its sight glass, which indicates the boiler's water level. Notice that the water doesn't completely fill the boiler, but instead allows a space for the steam to form above the boiler's water level.

If the steam-heating system remains, operate it at the lowest steam pressure that heats the building adequately. Two psi on the boiler-pressure gauge is a practical limit for many systems although some systems can operate at pressures down to a few ounces per square inch of pressure. Traps and air vents are crucial to operating at a low steam pressure. Electric vent dampers reduce off-cycle losses for both gas- and oil-fired systems.

Sight glass & low-water control: The sight glass shows the boiler water level. The low water control adds water to the boiler and extinguishes the burner if the water level is too low.

8.18.1 Steam System Maintenance

SWS Details: 5.3104.3 Maintenance: Checklist

Do these safety and maintenance tasks on steam systems.

- ✓ Verify that steam boilers have functioning high-pressure limits and low-water cut-off controls.
- ✓ Verify the function of the low-water cutoff by flushing the low-water cutoff with the burner operating. Combustion should stop when the water level in the boiler drops below the level of the float. If combustion continues, repair or replace the low-water cutoff.
- ✓ Verify that flush valves on low-water cutoffs are operable and don't leak water.
- ✓ Ask owner about instituting a schedule of blow-down and chemical-level checks.

- ✓ Specify that technicians drain mud legs on return piping.

8.18.2 Steam System Energy Conservation

Specify the following efficiency checks and improvements for steam systems.

One-Pipe Steam

- ✓ Verify that high-pressure limit control is set at or below 1 (one) psi or as low as acceptable in providing heat to the far ends of the building.
- ✓ Verify that steam reaches all radiators during every steam cycle. Steam need not fill radiators on every cycle. In mild weather, steam partly fills radiators before the boiler cycles off.
- ✓ Radiator air vents should be open to release air while the system is filling with steam, then closed when steam reaches the vents. Replace malfunctioning radiator air vents as necessary. However, don't over-vent radiators because this can cause water hammer.
- ✓ Verify air vents function and that all steam radiators receive steam during every cycle. Unplug air vents or replace malfunctioning vents as necessary. Add vents to steam lines and radiators as needed to get steam to all the registers.

Two-Pipe Steam

- ✓ When you can gain access to all the system's steam traps, repair leaking steam traps or replace them. All failed traps should be replaced at the same time to prevent new traps failing because of water hammer from steam leakage through neighboring failed traps. The only 100% reliable way to test a steam trap is to connect it to a test apparatus and see if it allows steam to pass. However if you have an accurate thermometer, the temperature on the radiator

side of a functioning trap should be more than 215°F and the temperature on the return side of that trap should be less than 205°F when steam is in the radiator.

One-pipe and two-pipe steam systems: Still common in multifamily buildings, one-pipe steam works best when very low pressure steam can drive air out of the piping and radiators quickly through plentiful vents. Vents are located on each radiator and also on main steam lines.

Two-pipe steam systems: Radiator traps keep steam inside radiators until it condenses. No steam should be present at the condensate tank.

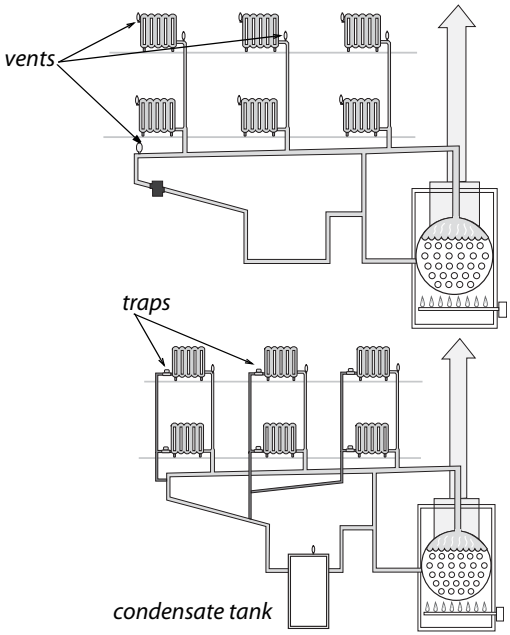

- ✓ When you can't gain access to all the system's steam traps at the same time, consider abandoning failed steam traps and installing radiator-inlet orifices in two-pipe steam radiators. The orifices limit steam flow to an amount that can condense within the radiator. Orifices can also reduce steam delivery to oversized radiators by 20% or a little more.
- ✓ Consider controlling radiators with thermostatic radiator valves (TRVs) except for radiators in the coolest rooms. TRVs can be used with systems equipped with either traps or orifices. For effective temperature control, the thermostatic element of the TRVs must be located in the path of air moving toward the radiator or convector. TRVs are available with sensors located remotely from the valve, which solves the problem of a valve located where the

radiator heats a valve-mounted sensor, fooling it into closing.

- ✓ Inspect return lines and condensate receiver for steam coming back to the boiler. Check radiator and main line traps.
- ✓ Check steam traps with a digital thermometer or listening device to detect any steam escaping from radiators through the condensate return. Replace leaking steam traps or their thermostatic elements.
- ✓ Consider installing remote sensing thermostats that vary cycle length according to outdoor temperature and include night-setback capability.

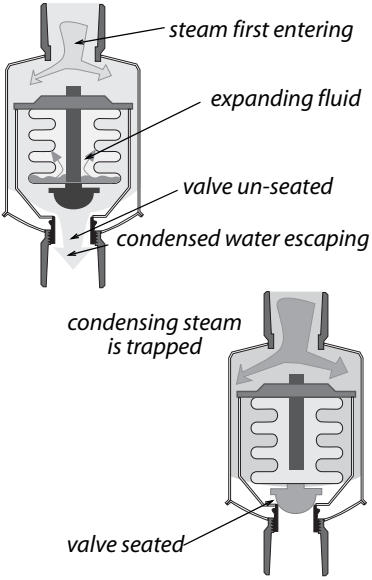

Steam traps: Steam enters the steam trap heating its element and expanding the fluid inside. The expanded element plugs the steam's escape with a valve.

- ✓ Repair leaks on the steam supply piping or on condensate return piping.
- ✓ Consider a flame-retention burner and electric vent damper as retrofits for steam boilers.
- ✓ Clean fire side of heat exchanger of noticeable dirt.

- ✓ All steam piping that passes through unconditioned areas should be insulated to at least R-3 with fiberglass or specially designed foam pipe insulation rated for steam piping.

8.19 Programmable Thermostats

SWS Details: 5.3104.1 Controls — Thermostat Replacement

A programmable thermostat may be a big energy saver if the building's occupants understand how to program it. However, a programmable thermostat won't save any energy if occupants already control day and night temperatures effectively.

If you replace the existing thermostat, as a part of weatherization work, discuss programmable thermostats with occupants. If they can use a programmable thermostat effectively, then install one. Educate occupants on the use of the thermostat and leave a copy of manufacturer's directions with them.

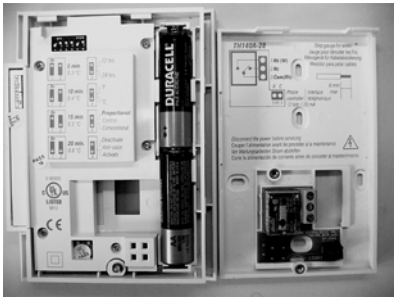

Inside a programmable thermostat: In addition to the instructions on the exterior of this thermostat are instructions inside for setting the heat anticipator.

Many models of programmable thermostats have settings that you select from inside the thermostat. These settings include the heat-anticipator setting, which adjusts the cycle length of the heating or cooling system.

8.20 Electric Heat

Electric heaters are usually 100% efficient at converting the electricity to heat in the room where they are located.

8.20.1 Electric Baseboard Heat

Electric baseboard heaters are zonal heaters controlled by thermostats within the zone they heat. Electric baseboard heat can help to minimize energy costs, if residents take advantage of the ability to heat by zones.

Baseboard heaters contain electric resistance heating elements encased in metal pipes. These are surrounded by aluminum fins to aid heat transfer. As air within the heater is heated, it rises into the room. This draws cooler air into the bottom of the heater.

- Make sure that the baseboard heater sits at least an inch above the floor to facilitate good air convection.
- Clean fins and remove dust and debris from around and under the baseboard heaters as often as necessary.
- Avoid putting furniture directly against the heaters. To heat properly, there must be space for air convection.

The line-voltage thermostats used with baseboard heaters sometimes don't provide good comfort. This is because these thermostats allow the temperature in the room to vary by 2°F or more. Newer, more accurate thermostats are available. Programmable thermostats for electric baseboard heat use timers or a resident-activated button that raises the temperature for a time and then automatically returns to the setback temperature. Some baseboard heaters use low-voltage thermostats connected to relays that control baseboard heaters in rooms.

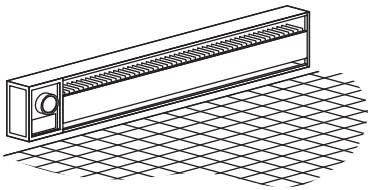

Electric baseboard: Electric baseboard is more efficient than an electric furnace and sometimes even outperforms a central heat pump because it is easily zoneable. The energy bill is determined by the habits of the occupants and the energy efficiency of the building.

8.20.2 Electric Furnaces

Electric furnaces heat air moved by its fan over several electric-resistance heating elements. Electric furnaces have three to six elements — 3.5 to 7 kW each — that work like the elements in a toaster. The 24-volt thermostat circuit energizes devices called sequencers that bring the 240 volt heating elements on in stages when the thermostat calls for heat. The variable speed fan switches to a higher speed as more elements engage to keep the air temperature stable.

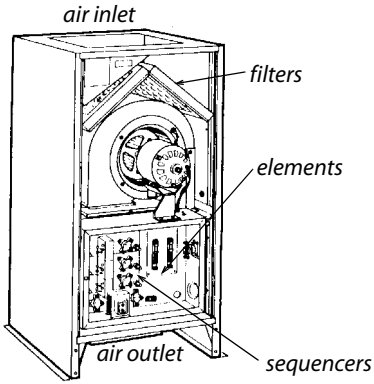

Electric furnace: A squirrel-cage blower blows air over 3 to 6 electric resistance coils and down into the plenum below the floor.

8.20.3 Central Heat-Pump Energy Efficiency

An air-source heat pump is almost identical to an air conditioner, except for a reversing valve that allows refrigerant to follow two different paths, one for heating and one for cooling. Heat pumps move heat with refrigeration rather than converting it from the chemical energy of a fuel.

Like air conditioners, air-source heat pumps are available as centralized units with ducts or as room units. Heat pumps are 1.5 to 3 times more efficient than electric furnaces. Heat pumps can provide competitive comfort and value with combustion furnaces, but they must be installed with great care and planning.

Heat pump: The air handler contains a blower, indoor coil, strip heat, and often a filter. Static pressure and temperature rise are two indicators of performance.

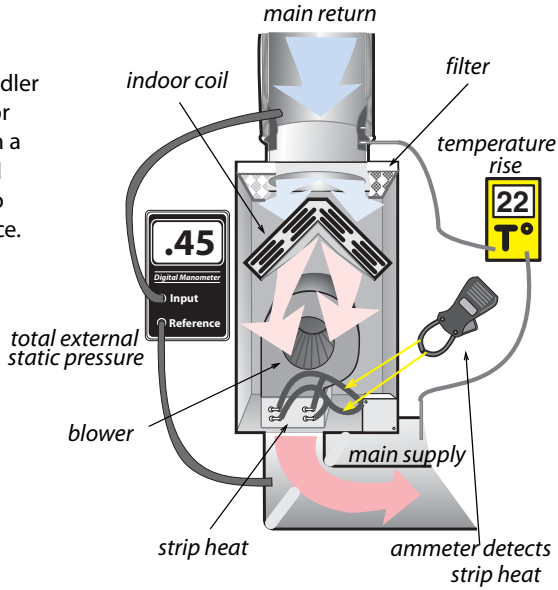

Heat pumps are also equipped with auxiliary electric resistance heat, called strip heat. The energy efficiency of a heat pump depends on how much of the heating load the compressor provides without using the strip heat.

Evaluating Heat Pumps During the Heating Season

Heat pumps should have two-stage thermostats designed for use with heat pumps. The first stage is compressor heating and the second stage is the inefficient strip heat. Evaluating heat pumps in the winter is more difficult than a summer evaluation. Consider these steps to evaluate heat pumps during the winter.

- Look for a temperature rise of around half the outdoor temperature in degrees Fahrenheit.
- Check for operation of strip heat by measuring amperage. Then use the chart shown here to find out if strip heat is operating.

Is strip heat activated? Using an ammeter and the nameplate data on the heat pump, a technician can know when and if the strip heat is activated.

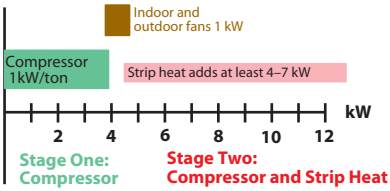

- External static pressure should be 0.5 IWC (125 pascals) or less for older, fixed-speed blowers and less than 0.8 IWC (200 pascals) for variable-speed and two-speed blowers. Lower external static pressure promotes higher airflow.
- Seal supply and return ducts and insulate them after you've verified the airflow as adequate. Return ducts should be sealed too.

Most residential central heat pumps are split systems with the indoor coil and air handler indoors and outdoor coil and compressor outdoors. Individual room heat pumps are more efficient since they don't have ducts, and are factory-charged with refrigerant. The illustrations show features of an energy-efficient heat pump installation.

In the summer, use the same procedures to evaluate central heat pumps as to evaluate central air conditioners, described on *page 342*.

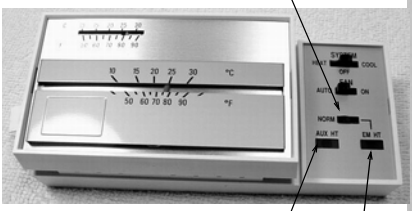

Heat pump thermostat: These should have two indicator lights, one for auxiliary heat and one for emergency heat.

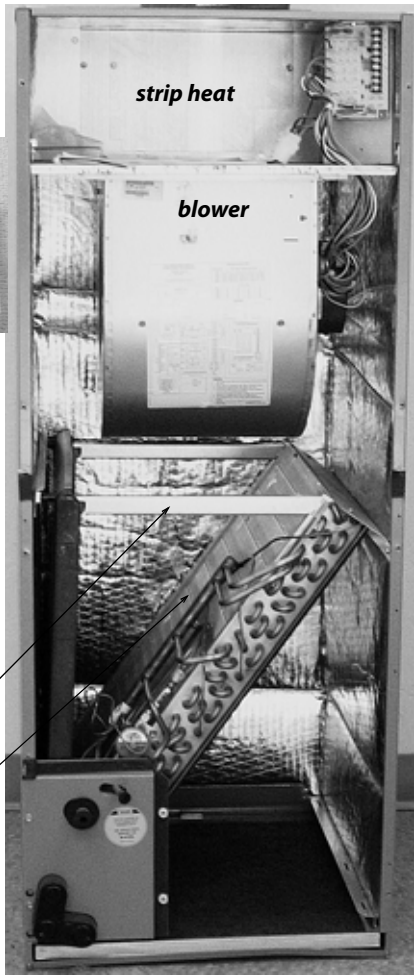

Heat pump: This upflow indoor air handler contains a blower, indoor coil, strip heat, and filter bracket.

Reversing valve: The outdoor unit contains a reversing valve installed near the compressor.

The illustration shows features of an energy-efficient heat pump installation.

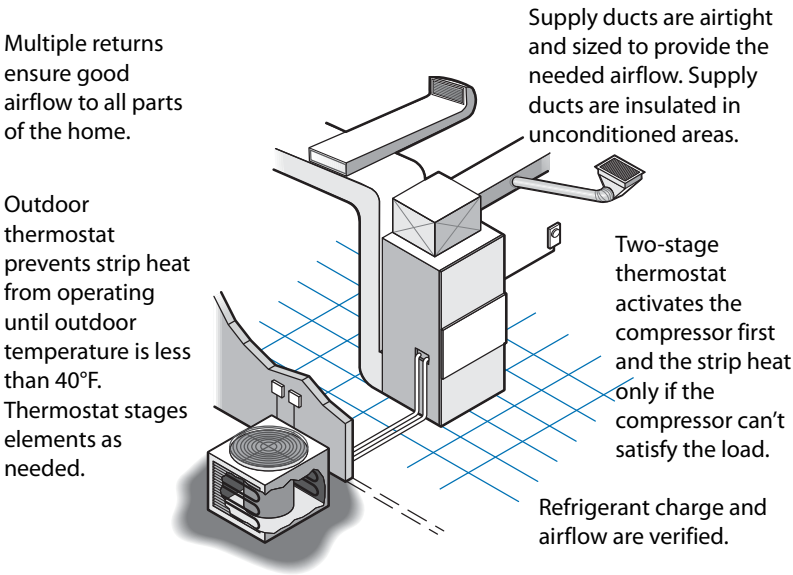

Coil is cleaned every year. Weeds, grass and shrubs shouldn't grow within 3 feet. Verify that no airflow restrictions exist above the outdoor unit.

8.20.4 Room Heat Pumps

Room heat pumps can provide all or part of the heating and cooling needs for small homes. These one-piece room systems (also known as terminal systems) look like a room air conditioner, but provide heating as well as cooling. They can also provide ventilation air when neither heating nor cooling are required. They mount in a window or through a framed opening in a wall.

Room (or unitary) heat pumps can be a good choice for replacing existing unvented gas space heaters. Their fuel costs may be somewhat higher than gas furnaces, though they are safer and require less maintenance than combustion appliances. Room

heat pumps also gain some overall efficiency because they heat a single zone and don't have the delivery losses associated with central furnaces or central boilers. If they replace electric resistance heat, they consume only one-half to one-third the electricity to produce the same amount of heat.

Room heat pumps draw a substantial electrical load, and may require 240-volt wiring. Provide a dedicated circuit that can supply the equipment's rated electrical input. Insufficient wiring capacity can result in dangerous overheating, tripped circuit breakers, blown fuses, or motor-damaging voltage drops. In most cases a licensed electrician should confirm that the house wiring is sufficient. Don't run portable heat pumps or any other appliance with extension cords or plug adapters.

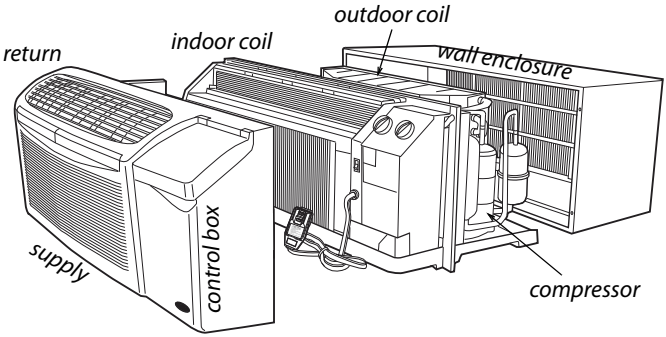

Unitary heat pumps: These unitary ductless heat pumps sit inside an exterior wall. They are a very efficient kind of electric heating and cooling.

8.20.5 Ductless Minisplit Pumps

Ductless minisplit heat pumps contain an outdoor condenser and one or more indoor fan-coil units that heat or cool the rooms. Mini-split heat pumps are among the most efficient heating and cooling systems available, providing 2-to-4 watt hours of heating or cooling for each watt hour of electricity they use. Specify minisplits heat pumps as replacement HVAC solutions when they are appropriate, for example.

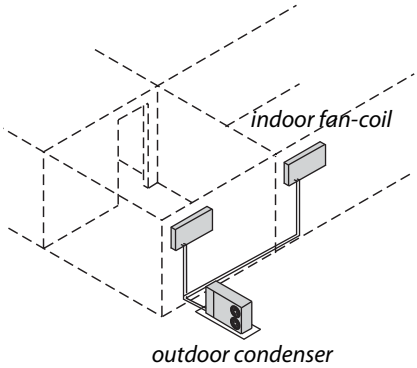

Ductless mini-split heat pumps: These systems have very high efficiency: 200% to 400%.

- Homes currently having no ducts.
- Homes with poorly designed or deteriorating ducts outside the thermal boundary or located in inaccessible areas, such as floor cavities.
- Isolated part of a building such as an addition or a bonus room.
- Very well-insulated, airtight, and shaded homes.
- Bedrooms needing cooling in homes with no central air conditioning.
- Masonry buildings being retrofitted to replace obsolete central space-conditioning systems (often steam).

8.21 Evaluating Ducted Central Air-Conditioning Systems

An energy-efficient home shouldn't need more than a ton of air-conditioning capacity for every 1000 square feet of floor space. Window shading, attic insulation, and air leakage should be evaluated together with air-conditioner performance.

The following four installation-related problems are characteristic of central air conditioning systems.

1. Inadequate airflow
2. Duct air leakage
3. Incorrect charge
4. Oversizing

Refrigerant-charge tests and adjustment come after airflow measurement and improvement, and after duct testing and sealing. Manufacturers recommend that you verify adequate airflow before checking and adjusting the refrigerant charge.

Table 8-15: Compiled Research Results on HVAC Performance[a]

Installation-Related Problem	%[b]	Savings Potential
Duct air leakage (avg. 270 CFM_{25})[c]	70%	17% avg.
Inadequate airflow	70%	7% avg.
Incorrect charge	74%	12% avg.
Oversized by 50% or more	47%	2–10%

a. Report sponsored by Environmental Protection Agency (EPA) and compiled from research from Multiple Field Studies.
b. Percent of tested homes found with a significant problem.
c. The number of homes of the duct-leakage studies was around 14,000; the number for the other problems was over 400 each.

8.21.1 Central Air-Conditioner Inspection

Air conditioners move a lot of air, and that air contains dust. The filter in the air handler catches most large dust. However some dust travels around or through the filter, depending on the filter and its mounting assembly. The condenser coil outdoors isn't protected by a filter and is usually quite dirty.

Cleaning the Condenser Coil

Dirt enters the coil from the outside. The goal of this procedure is to drive the dirt out by spraying inside to outside. With high-pressure water, however, you can drive the dirt through the coil and into the cabinet where it drains out through drain holes.

- ✓ Inspect the condenser coil and know that it is probably dirty even if it looks clean on the outside. Take a flat toothpick and scrape between the fins. Can you scrape dirt out from between the fins?
- ✓ Apply a biodegradable coil cleaner to the outside of the coil. Then spray cold water through the coil, preferably from inside the cabinet. Many coils can tolerate a high-pressure spray but others need low-pressure spray to avoid bending the fins.
- ✓ Straighten bent fins with a fin comb.

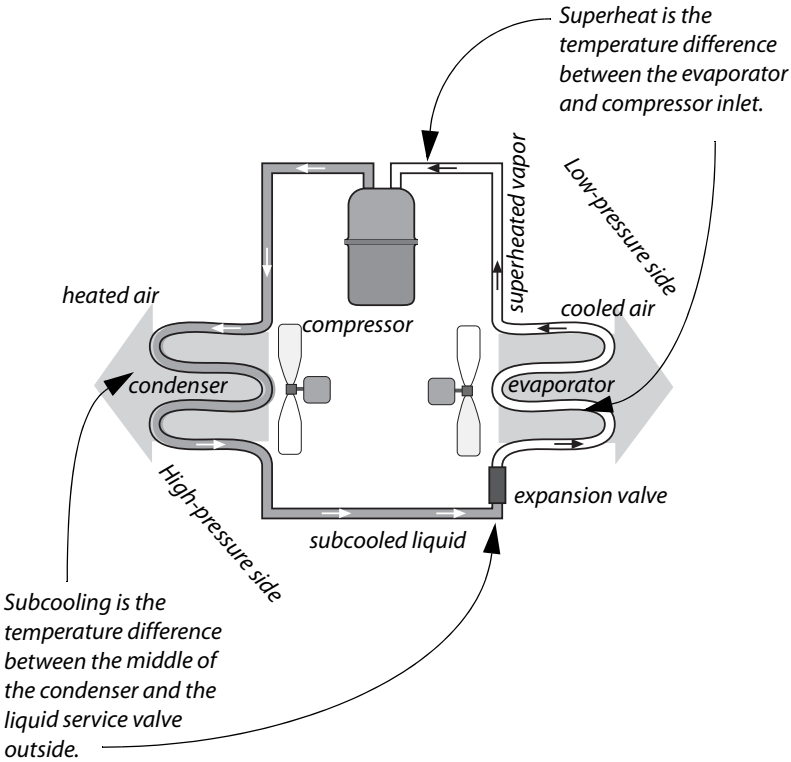

Cleaning the Evaporator Coil

Dirt enters the filter, blower, and coil from the return plenum.

- ✓ Inspect the filter slot in the air handler or the filter grille in the return air registers. Do the filters completely fill their opening? Are the filters dirty?
- ✓ Inspect the blower in the air handler after disconnecting power to the unit. Can you remove significant dirt from one of the blades with your finger? If the blower is dirty, then the evaporator coil is also dirty.
- ✓ Clean the blower and evaporator. Technicians rake surface dirt and dust off the coil. Then they use an indoor coil cleaner and water for cleaning.
- ✓ Straighten bent fins with a fin comb.

8.21.2 Air-Conditioner Sizing

Calculate the correct size of an air conditioner before purchasing or installing it. The number of square feet of floor space that can be cooled by one ton of refrigeration capacity is determined by the home's energy efficiency. Air-conditioners provide cooling most cost-effectively when they are sized accurately and run for long cycles.

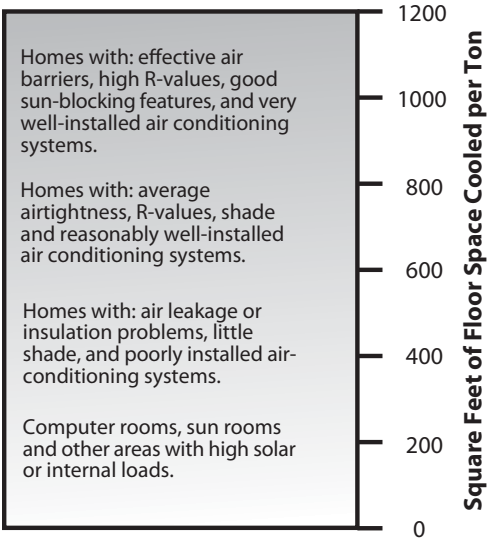

Air-conditioner sizing: An energy-efficient home shouldn't need more than a ton of air-conditioner capacity per 1000 square feet of floor area.

The cooling-cost reduction strategy should focus on making the home more energy efficient and making the air conditioner work more efficiently. Making the home more efficient involves shading, insulation, and air-leakage reduction. Making the air conditioner more efficient involves duct sealing, duct insulation, and a quality installation.

8.21.3 Duct Leakage and System Airflow

Unfortunately, duct leakage and poor airflow afflict most air-conditioning systems. The testing and mitigation of these problems was covered earlier in this chapter.

1. *See "Evaluating Duct Air Leakage" on page 309.*

2. *See "Ducted Air Distribution" on page 297.*

8.21.4 Evaluating Air-Conditioner Charge

Air-conditioning replacement or service includes refrigerant charge-checking. HVAC technicians evaluate refrigerant charge by two methods depending on what type of expansion valve the air conditioner has.

1. If the expansion valve has a fixed orifice, the technician performs a superheat test.
2. If the valve is a thermostatic expansion valve (TXV), the technician performs a subcooling test.

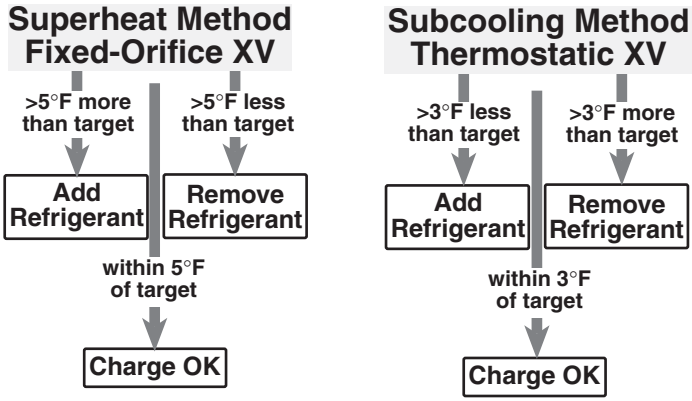

Charge-checking: Two methods help technicians judge whether the charge is correct. The remedy for incorrect charge is to either add or remove refrigerant.

These two tests indicate whether the amount of refrigerant in the system is correct, or whether there is too much or too little refrigerant. The amount of refrigerant is directly related to the efficiency of the air-conditioning system.

Perform charge-checking after the airflow tests, airflow adjustments, and duct-sealing are complete. Do charge-checking during the cooling season while the air conditioner is operating.

8.22 SWS Alignment

Field Guide Topic	SWS Detail
Combustion-Safety Evaluation Pg. 233	2.0105.1 Combustion Worker Safety 5.3003.14 Combustion Analysis of Gas-Fired Appliances (LP and Natural Gas), 5.3003.2 Combustion Analysis of Oil-Fired Appliances
Combustion-Safety Observations Pg. 234	
Leak-Testing Gas Piping Pg. 235	
Carbon Monoxide (CO) Testing Pg. 235	2.0105.1 Combustion Worker Safety, 2.0301.2 Carbon Monoxide Alarm or Monitor
Worst-Case CAZ Depressurization Testing Pg. 237	2.0105.1 Combustion Worker Safety, 2.0201.1 Combustion Appliance Zone (CAZ) Testing, 2.0201.2 Combustion Safety
Mitigating CAZ Depressurization and Spillage Pg. 241	
Zone Isolation for Atmospherically Vented Appliances Pg. 243	
Electronic Combustion Analysis Pg. 244	5.3003.2 Combustion Analysis of Oil-Fired Appliances 2.0201.2 Combustion Safety, 5.3003.14 Combustion Analysis of Gas-Fired Appliances (LP and Natural Gas)
Critical Combustion-Testing Parameters Pg. 246	

Field Guide Topic	SWS Detail
Heating System Replacement Pg. 248	
Combustion Furnace Replacement Pg. 248	5.3001.1 Load Calculation and Equipment Selection, 5.3001.2 Ductwork and Termination Design, 5.3002.1 Preparation for New Equipment, 5.3003.1 Data Plate Verification
Gas-Fired Heating Installation Pg. 251	2.0201.2 Combustion Safety 5.3003.14 Combustion Analysis of Gas-Fired Appliances (LP and Natural Gas)
Combustion Boiler Replacement Pg. 254	2.0105.1 Combustion Worker Safety, 5.3001.1 Load Calculation and Equipment Selection, 5.3101.2 Space Load Calculation—Heat Emitter Sizing
Oil-Fired Heating Installation Pg. 257	2.0201.2 Combustion Safety, 2.0203.3 Draft Regulation—Category I Appliance, 5.3003.9 Heating and Cooling Controls, 5.3003.4 Evaluating Electrical Service 5.3003.2 Combustion Analysis of Oil-Fired Appliances
Evaluating Oil Tanks Pg. 260	
Combustion Space Heater Replacement Pg. 261	2.0201.2 Combustion Safety
Space Heater Operation Pg. 262	

Field Guide Topic	SWS Detail
Unvented Space Heaters Pg. 263	2.0202.1 Unvented Space Heaters: Propane, Natural Gas, and Kerosene Heaters, 2.0401.1 Air Sealing Moisture Precautions
Gas Burner Safety & Efficiency Service Pg. 264	
Combustion Efficiency Test for Furnaces Pg. 264	
Inspecting Gas Combustion Equipment Pg. 265	
Testing and Adjustment Pg. 265	
Oil Burner Safety and Efficiency Service Pg. 267	
Oil Burner Testing and Adjustment Pg. 267	5.3003.2 Combustion Analysis of Oil-Fired Appliances
Oil Burner Inspection and Maintenance Pg. 271	5.3003.4 Evaluating Electrical Service
Inspecting Furnace Heat Exchangers Pg. 273	
Wood Stoves Pg. 274	
Wood Stove Clearances Pg. 275	
Stove Clearances Pg. 275	
Wood Stove Inspection Pg. 276	
Inspecting Venting Systems Pg. 279	
Vent Connectors Pg. 279	
Masonry Chimneys Pg. 282	2.0203.2 Combustion Flue Gas—Orphaned Water Heaters

Field Guide Topic	SWS Detail
Manufactured Chimneys Pg. 286	
Chimney Terminations Pg. 287	
Air Leakage through Masonry Chimneys Pg. 288	4.1001.3 Fireplace Chimney and Combustion Flue Vents
Special Venting Considerations for Gas Pg. 289	
Venting Fan-Assisted Furnaces and Boilers Pg. 290	
Combustion Air Pg. 292	2.0203.1 Combustion Air for Natural Draft Appliances
Un-Confined-Space Combustion Air Pg. 293	
Confined-Space Combustion Air Pg. 294	
Ducted Air Distribution Pg. 297	
Sequence of Operations Pg. 297	
Solving Airflow Problems Pg. 297	5.3003.3 Evaluating Air Flow
Unbalanced Supply-Return Air-flow Test Pg. 301	
Evaluating Furnace Performance Pg. 304	
Improving Forced-Air System Airflow Pg. 306	
Evaluating Duct Air Leakage Pg. 309	
Troubleshooting Duct Leakage Pg. 309	

Field Guide Topic	SWS Detail
Measuring Duct Air Leakage with a Duct Blower Pg. 313	
Measuring House Pressure Caused by Duct Leakage Pg. 316	
Sealing Duct Leaks Pg. 317	
Sealing Return Ducts Pg. 317	3.1602.1 Air Sealing Duct System, 3.1602.5 Return—Framed Platform, 3.1602.4 Air Sealing System Components, 3.1602.7 Return and Supply Plenums in Basements and Crawl Spaces
Sealing Supply Ducts Pg. 319	3.1602.1 Air Sealing Duct System, 3.1602.5 Return—Framed Platform 3.1602.4 Air Sealing System Components, 3.1602.7 Return and Supply Plenums in Basements and Crawl Spaces 3.1601.3 Support
Materials for Duct Sealing Pg. 322	
Duct Insulation Pg. 322	4.1601.1 Insulating Flex Ducts, 4.1601.2 Insulating Metal Ducts
Spray Foam Duct Insulation Pg. 324	3.1602.2 Duct Spray Polyurethane Foam (SPF) Installation
Hot-Water Space-Heating Distribution Pg. 324	

Field Guide Topic	SWS Detail
Boiler Efficiency and Maintenance Pg. 325	
Distribution System Improvements Pg. 326	5.3104.2 Maintenance: Gas Boiler Service Inspection
Steam Heating and Distribution Pg. 329	
Steam System Maintenance Pg. 330	5.3104.3 Maintenance: Checklist
Steam System Energy Conservation Pg. 331	
Programmable Thermostats Pg. 334	5.3104.1 Controls — Thermostat Replacement
Electric Heat Pg. 334	
Electric Baseboard Heat Pg. 335	
Electric Furnaces Pg. 336	
Central Heat-Pump Energy Efficiency Pg. 336	
Room Heat Pumps Pg. 340	
Ductless Minisplit Pumps Pg. 342	
Evaluating Ducted Central Air-Conditioning Systems Pg. 343	
Central Air-Conditioner Inspection Pg. 344	
Air-Conditioner Sizing Pg. 346	
Duct Leakage and System Airflow Pg. 346	
Evaluating Air-Conditioner Charge Pg. 347	

CHAPTER 9: VENTILATION

This chapter discusses ventilation, fans, termination fittings, and ducts. Before installing a ventilation system, read *"Health and Safety" on page 19* for more information on controlling the sources of moisture and indoor air pollutants.

This chapter covers these types of ventilation.

- Local or spot ventilation
- Whole-house ventilation
- Attic and crawl space ventilation
- Ventilation for cooling

9.1 POLLUTANT CONTROL

Controlling pollutants at the source is the highest priority for good indoor air quality. Mechanical ventilation can dilute pollutants. However, ventilation is ineffective against prolific sources of moisture and pollutants. Ask these questions to evaluate pollution sources.

- Do the occupants have symptoms of building-related illnesses? *See also "Health and Safety" on page 19.*
- Do sources of moisture like ground water, humidifiers, water leaks, or unvented space heaters cause indoor dampness, high relative humidity, or moisture damage? *See "Gas Range and Oven Safety" on page 25.*
- Are there combustion appliances, especially unvented ones, in the living space?
- Do the occupants smoke?
- Are there paints, cleaners, pesticides, gas or other chemicals stored in the home?

9.1.1 Pollution-Control Checklist

SWS Details: 6.6005.1 Clothes Dryer, 6.6005.2 Kitchen Range

Survey the home for pollutants before air-sealing the home. Perform the following pollutant control measures if needed.

- ✓ Repair roof and plumbing leaks.
- ✓ Install a ground moisture barrier over any bare soil in crawl spaces or dirt-floor basements.
- ✓ Verify that all dryer ducts and exhaust fans move their air to the outdoors.
- ✓ Verify that combustion-appliance vent systems operate properly. Don't air-seal homes if unvented space heaters will be left as the primary source of heat.
- ✓ Verify that kitchen range hoods vent to the outdoors.
- ✓ Move paints, cleaning solvents, and other chemicals out of the conditioned space if possible.

The home's occupants are often the source of many home pollutants, like candles and deodorizers. Educate the residents about minimizing pollutants in the homes.

9.2 Whole-Building Ventilation

SWS Details: 6.6201.1 Installed System Air Flow

Most homes in North America currently rely on air leakage for ventilation. The American Society of Heating, Refrigeration, and Air Conditioning Engineers (ASHRAE) publishes ventilation standards. Their current standard, ASHRAE 62.2-2013, requires fan-powered ventilation in all homes, as well as local exhaust ventilation in kitchens and bathrooms. The standard allows for natural infiltration (air leakage) to contribute toward the required whole-building ventilation rate. The standard also

allows for whole-building fan-powered ventilation to make up for insufficient local ventilation.

Refer to the standard for more details, guidance, and exceptions that are beyond the scope of this field guide. *http://www.tech-street.com/ashrae/products/1855284*. Residential Energy Dynamics provides a free online tool to help calculate ASHRAE 62.2-2013 ventilation rates. *http://residentialenergydynamics.com*

If you air-seal homes during weatherization, you may need to install whole-building mechanical ventilation systems under ASHRAE 62.2–2013, which has 3 components.

- Whole-building ventilation requirement.
- Local ventilation requirement.
- Natural infiltration credit.

9.2.1 Whole-Building Ventilation Requirement

SWS Details: 6.6201.1 Installed System Air Flow, 6.9901.1 Supplemental Ventilation Information—ASHRAE 62.2, 6.6204.1 Commissioning Existing Exhaust or Supply Ventilation Systems, 6.6201.2 Primary Ventilation Air Flow between Rooms

To comply with ASHRAE 62.2–2013, you can use either the formula or the table shown here to determine the whole-building ventilation airflow requirement. You can provide this fan-powered airflow in a number of ways.

- A dedicated exhaust or supply fan running continuously or cycling by automatic control.
- A bathroom or kitchen exhaust fan running continuously or cycling by automatic control.
- A central air handler drawing filtered outdoor air into its return.

- A balanced ventilation system such as a heat-recovery ventilator (HRV) or energy-recovery-ventilator (ERV).

If any room in the house exceeds ±3 pa pressure with reference to the outdoors when all interior doors are closed and while the ventilation system is operating, then install transfer grilles or jumper ducts as needed to reduce the room to outdoors pressure difference to less than ±3 pa. *SWS Detail: 6.6201.2 Primary Ventilation Air Flow between Rooms*

Option 1: The Formula

If you want to install the minimum ventilation capacity, use these steps to follow the formula option.

1. Determine the floor area of the conditioned space of the home in square feet (A_{floor}).
2. Determine the number of bedrooms (N_{br}).
3. Insert these numbers in the formula below.

$$\textbf{Fan Airflow(CFM)} = 0.03A_{floor} + 7.5(N_{br} + 1)$$

From ASHRAE Standard 62.2-2013 equation 4.1a.

Option 2: The Table

You can also determine the fan airflow under ASHRAE 62.2–2013 using the table shown here. This option will always provide a higher ventilation rate than the formula.

Table 9-1: CFM Requirements for Whole-Building Ventilation

Floor Area (ft^2)	Number of Bedrooms				
	1	2	3	4	5
<500	30	38	45	53	60
501–1000	45	53	60	68	75
1001–1500	60	68	75	83	90
1501–2000	75	83	90	98	105
2001–2500	90	98	105	113	120
2501–3000	105	113	120	128	135
3001–3500	120	128	135	143	150
3501–4000	135	143	150	158	165
4001–4500	150	158	165	173	180
4501–5000	165	173	180	188	195

Fan flow in CFM. From ASHRAE Standard 62.2-2013, Table 4.1a

9.2.2 Local Exhaust Ventilation Requirement

SWS Detail: 6.6201.1 Installed System Air Flow; 6.6005.2 Kitchen Range

There are two options for complying with the ventilation requirements for kitchens and bathroom. Demand controlled exhaust, or continuous exhaust.

- For demand controlled exhaust specify a minimum of 100 CFM for the kitchen, and 50 CFM for each bathroom.
- For continuous exhaust specify a minimum of 20 CFM for each bathroom, and 5 ACH for the kitchen (based on volume).

Local Exhaust Deficit

If the existing kitchen or bathroom ventilation doesn't meet the requirements in *"Local Exhaust Ventilation Requirement" on page 359*, you may adjust the whole-building ventilation rate to compensate for the local airflow deficits. Follow these steps to calculate the local-ventilation deficit in CFM that must be added to the whole-building ventilation rate.

1. Determine the total local exhaust ventilation requirement for all kitchens and bathrooms.
2. Measure the delivered airflow of existing kitchen or bathroom exhaust fans using flow hood, flow grid, or other airflow measuring device. Subtract this amount from the total local exhaust ventilation requirement.
3. If the local jurisdiction allows for operable windows to provide for local ventilation, subtract 20 CFM for each kitchen or bathroom that has an operable window.

The result of these steps is the local exhaust ventilation deficit in CFM. Add $^1/_4$ of this deficit to the required whole-building ventilation rate.

Measuring fan airflow: Use an exhaust-fan flow meter or a flow hood to verify the airflows through local exhaust fans and whole-building ventilation fans.

9.2.3 Infiltration Credit

ASHRAE 62.2-2013 allows for infiltration to contribute to the building's ventilation. It is possible that infiltration will meet the entire whole-building ventilation requirement for very leaky

buildings. For moderately leaky buildings, infiltration may contribute a portion of the building's ventilation. The amount of the infiltration credit is determined with a blower door test and weather data based on the building's location. Calculating the infiltration credit is complicated. To simplify the calculations, use the *RED Calc Free* online tool at *http://www.residentialenergydynamics.com/*and select the *"Use Local Ventilation Alternative Compliance"* option.

9.3 Fan and Duct Specifications

This section covers fan and duct specifications for both local ventilation and whole-building ventilation. Duct sizing, materials, and installation determine whether airflow meets the design amount (CFM). Most existing exhaust fans and ventilation systems don't achieve their design airflow because of installation flaws.

9.3.1 Fan Specifications

SWS Detail: 6.6003.1 Surface-Mounted Ducted, 6.6003.2 Inline, 6.6003.3 Through the Wall, 6.6003.4 Multi-Port System, 6.6003.5 Garage Exhaust Fan, 6.6288.1 Sound-Rating Limits

Continuous ventilation is highly recommended because it simplifies design and control. Continuous ventilation also minimizes depressurization by allowing selection of the minimum-sized fan. Exhaust fans, installed as part of weatherization work, must vent to outdoors and should include the following features.

1. Rated for continuous operation if the fan operates continuously.
2. A weatherproof termination fitting.
3. Unless the fan operates continuously, the fan housing or termination fitting should house a backdraft damper.

4. Noise rating and ventilation efficacy as specified in the table.

Table 9-2: Fan Noise Limits ASHRAE 62.2 - 2013

Fan	Noise Rating (sones)
Continuous operation	1 sone or less
Local ventilation up to 400 CFM	3 sones or less

Fan Installation

Observe these procedures when installing ventilation fans.

- ✓ Install the fan or ventilator as close as possible to its termination.
- ✓ Orient the fan or ventilator housing so that the exit fittings face toward their termination fittings.
- ✓ Remove an integral backdraft damper if the fan operates continuously.
- ✓ Be careful not to inhibit the back-draft-damper operation by installing screws that interfere with the damper's movement or by damaging the damper housing.
- ✓ Repair or replace the backdraft damper on an existing fan, if the damper doesn't open and close freely.
- ✓ Install in-line fans and multi-port ventilators in remote areas such as attics and crawl spaces and connect the fans to intake grilles in rooms.
- ✓ Isolate in-line fans and multi-port ventilators from framing to minimize noise.
- ✓ Measure the fan airflow to verify compliance with Standard 62.2 - 2013.

Two- or variable-speed fan: An occupancy sensor toggles between speeds. A 6-inch outlet provides airflow for whole-building ventilation.

Advanced 4-speed range fan: Lower speeds for continuous ventilation and higher ones for spot ventilation.

In-line fan in attic: A Y guides exhaust airflow from two bathrooms for both local exhaust and whole-building ventilation.

9.3.2 Termination Fittings

SWS Detail: 6.6002.2 Terminations, 6.6102.2 Intakes

Termination fittings for intake and exhaust ducts must exclude pests and water. Termination fittings must comply with these specifications.

- ✓ Termination fitting must direct water away from its opening.
- ✓ Flash or weather-seal termination fittings.
- ✓ Termination fittings must have insect screens over the openings.
- ✓ The termination-fitting collar must be the same diameter as the exhaust or intake fitting on the fan.

PVC elbow: This screened PVC elbow is an intake fitting for an HRV.

- ✓ If the fan has no backdraft damper and the fan operates intermittently, install a termination fitting with a backdraft damper, to operate in the direction of airflow.
- ✓ Fasteners must not interfere with backdraft-damper operation.

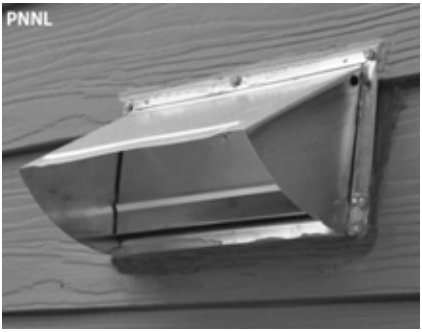

Termination fitting: If the fan operates intermittently, the termination fitting or the fan must have a backdraft damper.

Locating Termination Fittings

Locate termination fittings using these specifications.

- ✓ At least 6 inches above grade

- ✓ At least 10 feet from another fan termination
- ✓ Above local snow or flood line
- ✓ At least18 inches above a sloped asphalt based roof
- ✓ Never on a flat roof
- ✓ As required by local building authority
- ✓ Exhaust terminations must be at least 3 feet away from an operable window, an exterior door, or the property line.

9.3.3 Duct Sizing

Fans often fail to deliver their rated airflow capacity. Bends, un-straight flex duct, dirty grilles, and backdraft dampers can reduce design airflow by 50% or more.

If you follow the sizing in this table, you may achieve the fan's rated airflow for short duct runs with a maximum of two elbows.

For more detailed duct-sizing recommendations, see *"ASHRAE 62.2 Duct Sizing" on page 477*.

Table 9-3: Round Duct Diameters (inches) for Desired Airflows

Desired CFM	25	50	75	100	150	200
Rigid	4	5	6	7	8	9
Flex duct	5	6	7	8	9	10
Friction rate = 0.05; maximum equivalent length =100 feet						

9.3.4 Duct Materials and Installation

SWS Detail: 6.6002.1 Ducts, 6.6002.2 Terminations, 6.6003.2 Inline, 6.6003.1 Surface-Mounted Ducted, 6.6003.4 Multi-Port System, 6.6005.2 Kitchen Range, 6.6102.1 Outside Air Ventilation Supply Ducts, 6.6102.2 Intakes, 6.6103.1 Inline or Multi-Port, 6.6202.2 Heat Recovery Ventilator (HRV) and Energy Recovery Ventilator (ERV) Installation

This sections covers SWS requirements and best practices for installing ventilation ducts connected to exhaust fans, ventilators, and air handlers.

See also "Sealing Duct Leaks" on page 317.

Rigid Duct Installation

Observe these best practices for installing rigid ventilation ducts.

- ✓ Prefer rigid smooth metal pipe (30 gauge or thicker) or plastic pipe (Schedule 30 or thicker) for ventilation duct.
- ✓ Limit elbows to a maximum of two per duct run.
- ✓ Use three sheet-metal screws to fasten sections of round metal duct together.
- ✓ Join rigid duct sections so the edge of male end of a duct section isn't opposing airflow.
- ✓ Follow manufacturer's instructions to join other types of rigid ducts together.
- ✓ Seal all rigid-duct joints and seams with mastic, mastic and webbing, or metal tape, labeled UL181B or UL181B-M. *See "Sealing Duct Leaks" on page 317.*
- ✓ Support metal ducts with at least $^{1}/_{2}$-inch, 18 gage strapping or at least 12-gage galvanized wire, not less than 10 feet apart.

- ✓ Insulate ducts to R-8 to prevent condensation if they travel through unconditioned spaces. *See "Duct Insulation" on page 322.*
- ✓ Fasten PVC exhaust ducts together with approved PVC cement.

Flexible Duct Installation

Observe these best practices for installing flexible ducts.

- ✓ Stretch flex duct and support it every 4 feet with a 1.5-inch duct support.
- ✓ Use tool-tensioned plastic tie bands to join both the inner liner and the outer liner of the flex duct to the rigid duct or a fitting on the fan or termination fitting.
- ✓ Flexible air duct material must meet UL 181, NFPA 90A/90B, International Mechanical Code, or the Uniform Mechanical Code.

Flex duct joint to metal: Seal the metal takeoff to the main duct. Seal the inner liner of the flex duct to the takeoff with a tool-tensioned tie band.

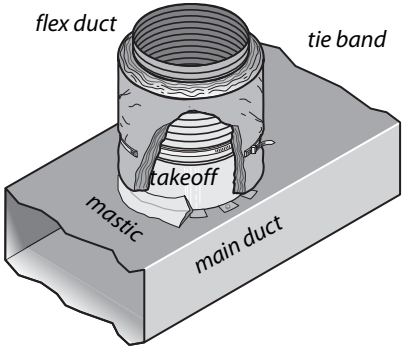

9.4 Whole-Building Ventilation Systems

This section discusses three options for design of whole-building ventilation systems.

- ✓ Exhaust ventilation
- ✓ Supply ventilation

- ✓ Balanced ventilation

See "Fan and Duct Specifications" on page 361.

We begin by discussing ducts for all types of ventilation systems.

9.4.1 Exhaust Ventilation

SWS Detail: 6.6201.1 Installed System Air Flow

Exhaust ventilation systems employ an exhaust fan to remove indoor air, which is replaced by infiltrating outdoor air.

Installing a two-speed bathroom fan is a common ventilation strategy. The new fan runs continuously on low speed for whole-building ventilation. A built-in occupancy sensor switches the fan automatically to a high speed to remove moisture and odors from the bathroom quickly.

A remote fan that exhausts air from several rooms through ducts (4-to-6 inch diameter) may provide better ventilation for larger more complex homes, compared to a single-point exhaust fan.

- ✓ Fans must conform to *"Fan Specifications" on page 361*.
- ✓ Ducts must conform to *"Duct Materials and Installation" on page 366*.
- ✓ Termination fittings must conform to *"Termination Fittings" on page 363*.

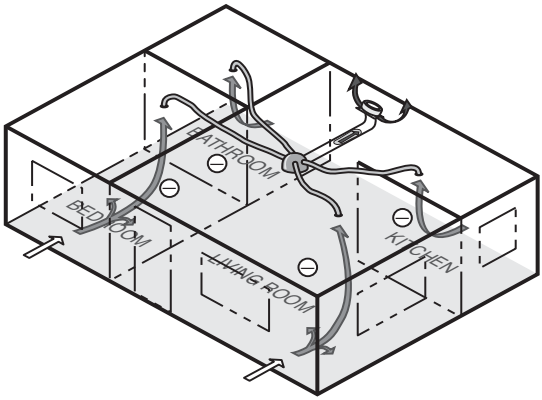

Multi-port exhaust ventilation: A multi-port ventilator creates better fresh-air distribution than a single central exhaust fan.

Passive intake vent: Exhaust ventilation systems often use passive vents to supply make-up air. This vent is close-able for very cold weather

Exhaust ventilation systems create a negative house pressure, drawing outdoor air in through leaks in the shell. This keeps moist indoor air from traveling through building cavities, which would occur with a positive house pressure. The negative house pressure reduces the likelihood of moisture accumulation in building cavities during the winter months in cold climates. In hot and humid climates, however, this depressurization can draw moist outdoor air into the home through building cavities. Therefore we recommend supply ventilation for warm humid climates rather than exhaust ventilation.

9.4.2 Supply Ventilation

SWS Detail: 6.6102.3 Intake for Ventilation Air to Forced Air System Used for Heating or Cooling

Supply ventilation, using the home's air handler, is never operated continuously as with exhaust ventilation because the furnace or heat-pump blower is too large and would over-ventilate

the home and waste electrical energy. Supply ventilation may not be appropriate for tight homes in very cold climates because supply ventilation can push moist indoor air through exterior walls, where moisture can condense on cold surfaces.

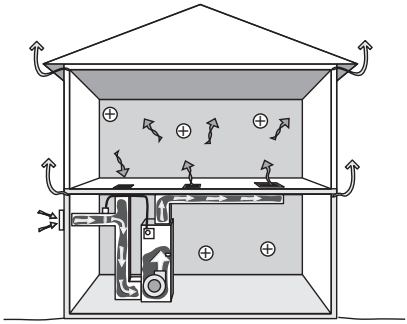

Supply ventilation: A furnace or heat pump with an outside air duct intake is used for ventilation with a control that ensures sufficient ventilation.

Motorized Outdoor-Air Damper

A motorized damper that opens when the air-handler blower operates must control outdoor-air supply. The furnace/air conditioner heats or cools the outdoor air as necessary before delivering it to the living spaces.

The damper control estimates how much ventilation air is needed. The damper closes after the required amount of ventilation air has entered during heating or cooling. The control also activates the damper and the blower for additional ventilation air as needed without heating or cooling the air, during mild weather.

Supply-Ventilation System Requirements

Supply ventilation typically uses the furnace or heat pump as a ventilator. A 5-to-10 inch diameter duct connects the furnace's main return duct to a termination outdoors.

- ✓ The existing duct system must leak less than 10% of the air handler flow when measured at 25 Pa. WRT outside.
- ✓ The outdoor air must flow through a MERV 6 or better air filter before flowing through heating and cooling equipment.

- ✓ Ducts must conform to *"Duct Materials and Installation" on page 366*.
- ✓ Termination fittings must comply with *"Termination Fittings" on page 363*.

9.4.3 Balanced Ventilation

SWS Detail: 6.6202.2 Heat Recovery Ventilator (HRV) and Energy Recovery Ventilator (ERV) Installation

Balanced ventilation systems exhaust stale air and provide fresh air through a ducted distribution system. Of the three ventilation systems discussed here, balanced systems do the best job of controlling pollutants in the home.

Balanced systems move equal amounts of air into and out of the home. Most balanced systems incorporate heat-recovery ventilators or energy-recovery ventilators that reclaim heat and moisture from the exhaust air stream.

Centralized balanced ventilation: Air is exhausted from areas most likely to contain pollutants and fresh air is supplied to living areas.

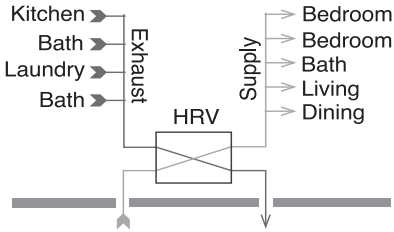

Balanced ventilation systems can improve the air quality and comfort of a home, but they require a high standard of care. Testing and commissioning is vital during both the initial installation and periodic service calls.

Heat-Recovery and Energy-Recovery Ventilators

The difference between heat-recovery ventilators (HRVs) and energy-recovery ventilators (ERVs) is that HRVs transfer heat only, while ERVs transfer both sensible heat and latent heat (moisture) between air streams.

HRVs are often installed as balanced whole-building ventilation systems. The HRV core is an air-to-air heat exchanger in which the supply and exhaust air streams pass one another and exchange heat without mixing.

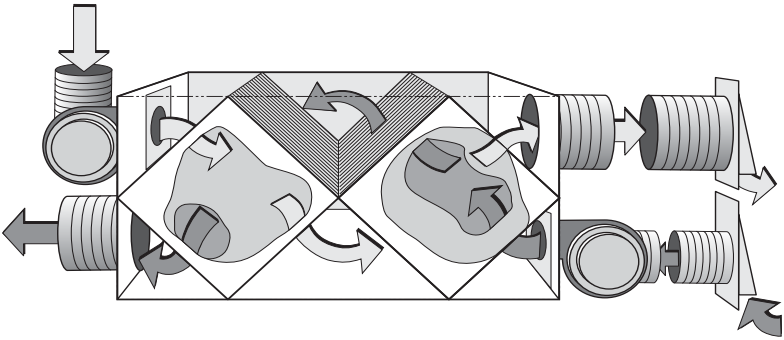

Heat-recovery ventilator: Heat from the exhaust air heats a plastic or aluminum heat exchanger, which in turn heats the fresh intake air. Two matched fans provide balanced ventilation.

9.4.4 Adaptive Ventilation

The home's residents can maintain good indoor air quality by using spot ventilation together with opening windows and doors. Depending on climate and season, residents can control natural ventilation to provide clean air, comfort, and energy efficiency.

- ✓ Choose windows and screen doors in strategic locations to ventilate using prevailing winds.
- ✓ Make sure that windows and screen doors, chosen for ventilation, open and close and have effective insect screens.
- ✓ Open windows to provide make-up air when an exhaust fan or the clothes dryer is operating.
- ✓ Understand that dust and pollen may enter through windows or screen doors and consider the consequences.

9.5 Attic Ventilation

SWS Detail: 4.1088.1 Attic Ventilation

Attic ventilation has the following functions.

- To keep the attic insulation and the attic's other building materials dry by circulating dry outdoor air through the attic.
- To prevent ice dams in cold weather by preventing snow melt by keeping the roof deck cold during the winter.
- To remove solar heat from the attic during the summer.

9.5.1 Attic Ventilation as a Solution for Moisture Problems

The best way to keep attic insulation dry is to air-seal the attic floor to block moist air from entering the attic. Adding attic vents may help to solve certain attic moisture problems.

- Seasonal moisture deposition removed by vents.
- Ice damming in areas that currently lack high and low vents.

Adding attic vents won't solve these attic moisture problems.

- Moisture deposited by air leaks between the living space and the attic.
- Rain driven through attic vents.
- Roof leaks that dampen building materials beyond the capacity of the vents to dry.

9.5.2 When to Install Attic Ventilation

Install more attic ventilation only if you believe that the home needs one of the attic-ventilation functions listed above.

- Don't increase attic ventilation without first sealing attic air leaks and testing the attic air barrier for adequate airtightness.
- Avoid cutting new vents through the roof to avoid the possibility of roof leaks.
- Attic ventilation may not provide a useful function in some climates, such as persistently damp climates or windy, rainy climates.

Important note: An outright exception to ventilating attics is offered by the IRC if a code official determines that "atmospheric or climatic conditions" aren't favorable to attic ventilation.

9.5.3 Attic Ventilation Requirements

Always vent exhaust fans directly to outdoors (through a soffit, gable, or wall) and never into a ventilated attic.

Net free area is the area of the vent minus the vent's solid obstructions such as screens and louvers. The net free area is typically 50% to 70% of the gross vent area.

The IRC and SWS state these requirements for attic ventilation.

- ✓ Provide a maximum ratio of one square foot of net free vent area to 150 square feet of attic area.
- ✓ The IRC requires only one square foot of net free area per 300 square feet of attic area for ceilings, with an interior vapor barrier, or with distributed ventilation (high and low), or with thorough air-sealing of the ceiling.
- ✓ Vents must have screens, with $^1/_4$-to-$^1/_{16}$ inch or less opening, to prevent the entry of pests and to reduce the entry of snow and rain.
- ✓ Vertical vents must have louvers to deflect rain.

Soffit chute or baffle: Install a maximum amount of insulation that the baffle allows. The chute prevents wind-washing and conveys the ventilation air over the insulation. The distributed vents ventilate the whole surface of the insulation and cool the whole roof in winter, preventing ice damming.

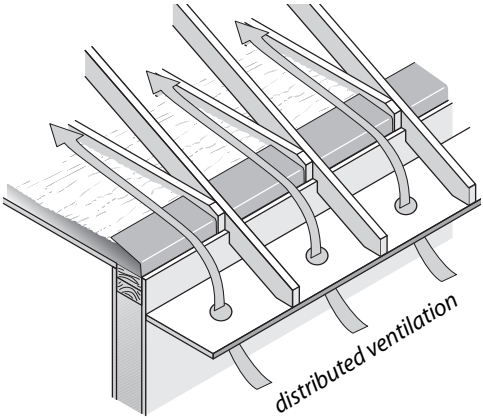

- ✓ Install vent chutes or baffles to prevent blown insulation from entering the space between soffit vents and the attic. The baffles should allow the maximum amount of insulation to be installed over top plates without restricting ventilation paths. Vent chutes or baffles also help prevent the wind-washing of insulation caused by cold or hot air entering soffit vents. They should extend upwardly along the rafter to at least 4 inches above the finished insulation level.
- ✓ Don't use powered ventilators to increase attic ventilation because of their energy consumption and doubtful effectiveness.

High and Low Vents

A combination of high and low vents is the best way to move ventilating air through the attic. Soffit vents and ridge vents are an ideal combination for high-low attic ventilation. However, gable vents and roof vents, located high or low, also create acceptable ventilation.

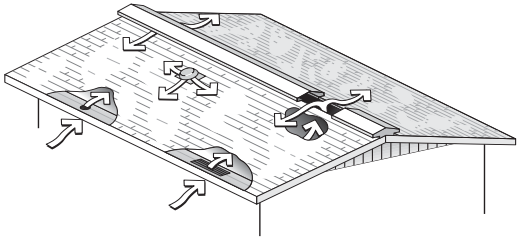

Low and high attic ventilation: Distributed ventilation — high and low — is more effective than vents that aren't distributed.

9.5.4 Power Ventilators

Power ventilators have limited value ventilating attics for air-conditioning energy savings or moisture mitigation.

- Power ventilators typically run longer than necessary.
- Power ventilators often consume more electricity than they save in reduced air conditioning.
- Power ventilators can pull conditioned air out through ceiling air leaks, counteracting their ventilating or cooling benefit.

9.5.5 Unventilated Attics

According to the IRC, new attics may be unventilated if the two conditions listed here are met.

1. The roof assembly is insulated with an air-impermeable insulation, such as high-density sprayed polyurethane, to the bottom of the roof sheathing.
2. There is no vapor barrier installed in the ceiling.

9.6 Crawl Space Ventilation

SWS Detail: 2.0401.2 Vented Crawl Space—Venting, 2.0111.2 Crawl Spaces—Pre-Work Qualifications, 2.0111.3 Crawl Spaces—Debris Removal, 2.0404.3 Closed Crawl Spaces—Crawl Space Conditioning, 2.0701.1 Crawl Spaces—Providing Access

Before taking steps to improve crawl-space ventilation, comply with these requirements.

- ✓ The crawl space should have an access hatch or door that is adequate for a worker or resident to enter or exit.
- ✓ Correct grading, drainage, and gutter-and-downspout problems related to crawl-space moisture problems.
- ✓ Install a ground moisture barrier as specified in *"Crawl Space Moisture and Safety Issues" on page 35*.
- ✓ Install a sump pump with its discharge drained to daylight or a French drain to drain persistent standing water.

9.6.1 Naturally Ventilated Crawl Spaces

SWS Detail: 2.0401.1 Air Sealing Moisture Precautions, 2.0403.3 Closed Crawl Spaces—Vapor Retarders on Walls

When insulating the floor, the crawl space is usually ventilated naturally through passive vent openings in the foundation wall. A seam-sealed and edge-sealed ground moisture barrier protects the floor insulation and other building materials from ground moisture and the vents provide a little drying by circulating outdoor air.

In a dry crawl space with a sealed ground-moisture barrier, ventilation openings may be one square foot of net free ventilation area for every 1500 square feet of crawl-space floor area, according to the IRC. Large existing vents may be retrofitted with smaller ones to comply with this spec. In practical terms the air leakage, between the outdoors and the crawl space, may provide

enough ventilation for dry homesites if there are no existing vents.

9.6.2 Power-Ventilated Crawl Spaces

SWS Detail: 2.0401.1 Air Sealing Moisture Precautions

The IRC allows you to seal the crawl-space vents completely when you insulate the foundation walls and power-ventilate the crawl space. These three specifications apply to power-ventilated or conditioned crawl spaces.

1. Remove moisture sources like standing water and install a seam-sealed and edge-sealed ground-moisture barrier, before sealing the foundation vents.
2. The IRC requires 1 CFM per 50 square feet of crawl space floor area in continuous powered exhaust ventilation. The IRC requires openings from the crawl space into the home so that make-up air comes from the living space. Some installers depend on floor air leakage to provide make-up air instead of intentional openings between the home and crawl space.
3. An acceptable alternative to option 3 is controlling the exhaust fan with a demumidistat (moisture sensitive control). Such an exhaust fan typically operates continuously until the crawl space is dry and then intermittently after that. This option isn't IRC-approved.

9.6.3 Conditioned Crawl Spaces

SWS Details: 2.0403.2 Closed Crawl Spaces—Ground Moisture Barriers, 2.0404.3 Closed Crawl Spaces—Crawl Space Conditioning

The IRC requires 1 CFM per 50 square feet of crawl space floor area in conditioned supply air from a forced-air system. The

IRC requires openings from the crawl space into the home for this option. The conditioned option requires code-compliant level of foundation insulation appropriate for the home's climate.

The conditioned crawl space, although allowed by the IRC, may be an ineffective moisture-and-energy solution for existing crawl spaces, especially in dry locations. In humid climates with damp crawl spaces, the conditioned crawl space has succeeded in reducing moisture problems and even energy costs, when combined with an airtight ground moisture barriers and foundation insulation.

9.7 Ventilation for Cooling

Ventilation cooled homes for centuries before air conditioning was invented. Ventilation is still an effective method for clients who can't afford air conditioning.Ventilate with fans during the coolest parts of the day and night, and close the windows during the hottest periods.

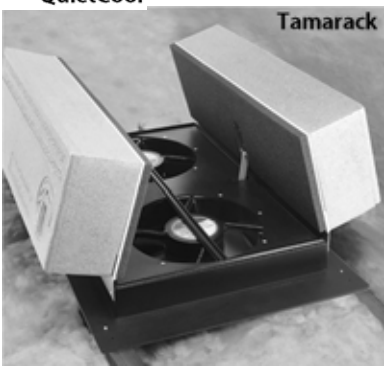

Modern whole-house fans: Modern models feature multiple speeds, tight-sealing insulated enclosures, and quiet operation

9.7.1 Whole-House Fans

Whole-house fans range in diameter from 24 inches to 42 inches, with capacities ranging from 3,000 to 10,000 cubic feet per minute (cfm). The capacity of the fan in cfm is rated for two different conditions: 1) free air; and 2) air constricted by 1 inch of static pressure. The second condition is closer to the actual operating conditions of the fan in a home, and the cfm rating at 1 inch of static pressure may still be 10 to 30 percent higher than the actual volume of air moved by the installed whole-house fan. This means you should probably install a fan with a greater capacity than the sizing recommendations that follow.

Whole-house fans require 2 to 4 times the normal area of attic vent openings. Install a minimum of 1 square foot of net free area for every 750 cfm of fan capacity. However, more vent area is better for optimal whole-house-fan performance because the extra vent area increases airflow.

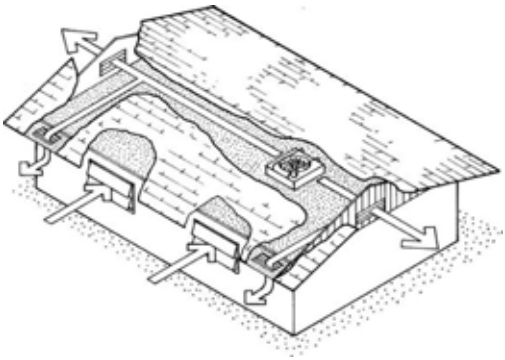

Whole-house fan circulation: the whole-house fan sucks air out of the house and exhausts it into the attic or through a gable wall. Cooler air enters the windows as make-up air for the fan.

To estimate the suitable size of a whole-house fan in cubic feet per minute, first determine the volume of your home in cubic feet. To calculate volume, multiply the square footage of the floor area in your home that you want to cool by the height from floor to ceiling. Take that volume and multiply by 15 to 40 air changes per hour, depending on how much ventilation you want. Then, divide by 60 minutes to get cubic feet per minute of capacity for the whole-house fan.

$$\text{Fan Airflow(CFM)} = \frac{\text{House volume X 15-40 ACH}}{60}$$

Some fans come with a tight-sealing winter cover. If the fan doesn't have such a cover, or if the attic access doesn't allow you to cover the fan easily, then you can fabricate a cover for the grille on the ceiling. A seasonal cover, held in place with rotating clips or spring clips and sealed with foam tape, works well. If the clients switch between air conditioning and cooling with a whole-house fan as the summer weather changes, build a tightly-sealed, hinged door for the fan opening that is easy to open and close when they switch cooling methods.

Air-sealed and dammed whole-house fan: The whole-house fan must be dammed like an attic access hatch with air sealing and insulation to prevent excessive heat loss or gain.

9.7.2 Window Fans

Window fans are best used in windows facing the prevailing wind or away from it to provide cross ventilation. Window fans can augment any breeze or create a breeze when the air is still. If the wind direction changes in your area, use reversible type window fans so you can either pull air into the home or push air out, depending on which way the wind is blowing. Experiment with positioning the fans in different windows to see which arrangement works best.

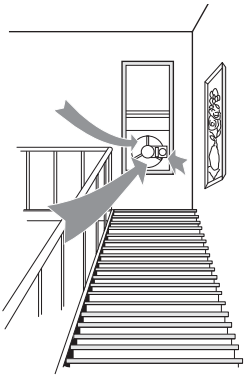

Window fans: Window fans circulate outdoor air when it is cooler than indoor air. The air circulation removes heat from the house.

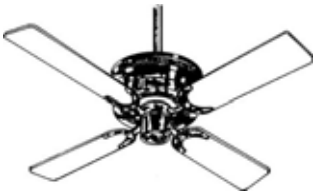

Ceiling fans: Ceiling fans cool people by convecting air next to their skin and helping evaporate sweat.

9.7.3 Air Circulation

Air circulating fans are very effective cooling energy savers. Air circulating fans may allow a 4 degree rise in the thermostat setting with no decrease in comfort.

Use circulating fans with air conditioners, evaporative coolers, whole-house fans, or by themselves. Circulating fans save cooling energy by increasing air movement over the skin to help occupants feel cooler.

Ceiling fans and various types of portable fans provide more comfort at less cost than any other electrically powered cooling strategy. Options include: small personal fans that sit on tabletops, or heavier units that sit on the floor or on metal stands with wheels.

Ceiling fans produce high air speeds with less noise than oscillating fans or box fans. High quality ceiling fans are generally more effective and quieter than cheaper ones. Ceiling fans are a key element to providing low-cost comfort to a home.

9.7.4 Evaporative Coolers

SWS Detail: 3.1602.6 Capping Dual-Cooling Up-Ducts

Evaporative coolers (also called swamp coolers) are an effective energy efficient cooling strategy in dry climates. An evaporative cooler is a blower and wetted pads installed in a compact louvered air handler.

Evaporative coolers employ different principles from air conditioners because they reduce air temperature without removing heat from the air. They work well only in climates where the summertime relative humidity remains less than 50%. They compare to an air conditioner with a SEER between 30 and 40, which is 2 to 3 times the SEER of the most efficient air conditioners.

Installers mount evaporative coolers on a roof, through a window or wall, or on the ground. The cooler can discharge air directly into a room or hall or it can be connected to ducts for distribution to numerous rooms.

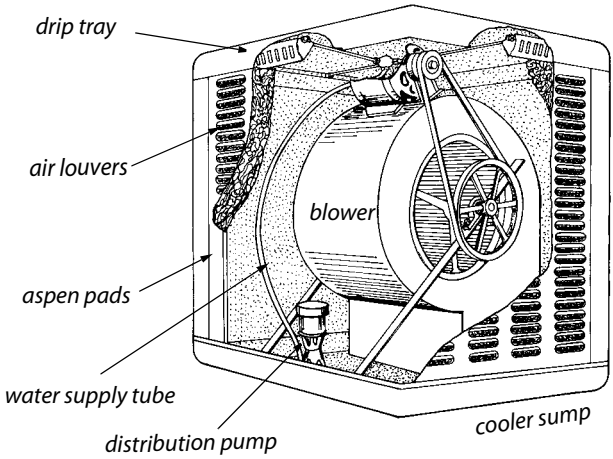

Evaporative Cooler Operation

The evaporative cooler's blower moves outdoor air through water-saturated pads, reducing the air's temperature to below the indoor air temperature. The blower moves this evaporatively cooled outdoor air into the house, pushing warmer indoor air out through open windows or dedicated up-ducts.

A water pump in the reservoir circulates water through tubes into a drip trough, which then drips water into the thick pads. A float valve connected to the home's water supply keeps the reservoir supplied with fresh water to replace the water that evaporates.

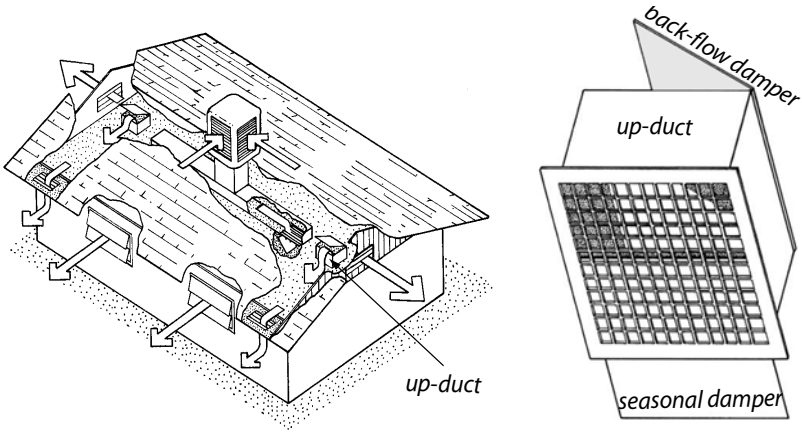

Air circulation: Outdoor air is sucked through the evaporative cooler and blown into the home pushing house air out of the partially open windows. Some homes with evaporative coolers employ up-ducts instead of open windows for security concerns.

Opening windows in occupied rooms, and closing windows in unoccupied rooms concentrates the cooling effect where residents need it. Experiment to find the right windows to open and how wide to open them. If the windows are open too wide hot air will enter. If the windows are not open far enough humidity will rise, and the air will feel sticky.

Up-Ducts

Up-ducts are one-way vents from the living space to the attic. Up-ducts are for occupants who want to avoid opening windows for security reasons. The cool air from the evaporative cooler flows into the living space, through the up-ducts, into the attic, and out the attic vents. Up-ducts can be a significant source of air leakage. They may be temporarily sealed seasonally or even removed during weatherization.

Evaporative Cooler Sizing and Selection

Evaporative coolers are rated in cubic feet per minute (cfm) of airflow they deliver. Airflow capacity ranges from 2000 to 7000 cfm. Recommendations vary from 2-to-3 cfm per square foot of floor space for warm dry climates and 3-to-4 cfm/sf for hot desert climates.

Evaporative Cooler Maintenance

Evaporative coolers see a lot of water, air, and dirt during operation. Dirt is the enemy of evaporative-cooler operation. Evaporative coolers process a lot of dirt because their aspen pads are good filters for dusty outdoor air.

Airborne dirt that sticks to the cooler pads washes into the reservoir. Most evaporative coolers have a bleed tube or a separate pump that changes the reservoir water during cooler operation to drain away dirty water. Evaporative coolers needs regular cleaning, depending on how long the cooler runs and how well the dirt-draining system is working. Be sure to disconnect the electricity to the unit before servicing or cleaning it.

Observe these general specifications for maintaining evaporative coolers.

- ✓ Aspen pads can be soaked in soapy water to remove dirt. Clean louvers in the cooler cabinet when you clean or change pads. Replace the pads when they become unabsorbent, thin, or loaded with scale and entrained dirt.
- ✓ If there is a bleed tube, check discharge rate by collecting water in a cup or beverage can. You should collect a cup in three minutes or a can in five minutes.
- ✓ If the cooler has two pumps, one is a sump pump. The sump pump drains the sump every five to ten minutes of cooler operation.
- ✓ If there is noticeable dirt on the blower's blades, clean the blower.

- ✓ Clean the holes in the drip trough that distributes the water to the pads.
- ✓ Clean the reservoir every year to remove dirt, scale, and biological matter.
- ✓ Pay particular attention to the intake area of the circulating pump during cleaning. Debris can get caught in the pump impeller and stop the pump.
- ✓ Check the float assembly for positive shutoff of water when the sump reaches its level. Repair leaks and replace a leaky float valve.
- ✓ Investigate signs of water leakage and repair water leaks.

9.8 SWS Alignment

Field Guide Topic	SWS Detail
Pollutant Control Pg. 355	
Pollution-Control Checklist Pg. 356	6.6005.1 Clothes Dryer, 6.6005.2 Kitchen Range
Whole-Building Ventilation Pg. 356	6.6201.1 Installed System Air Flow
Whole-Building Ventilation Requirement Pg. 357	6.6201.1 Installed System Air Flow, 6.9901.1 Supplemental Ventilation Information—ASHRAE 62.2, 6.6204.1 Commissioning Existing Exhaust or Supply Ventilation Systems, 6.6201.2 Primary Ventilation Air Flow between Rooms
Local Exhaust Ventilation Requirement Pg. 359	6.6201.1 Installed System Air Flow 6.6005.2 Kitchen Range

Field Guide Topic	SWS Detail
Fan and Duct Specifications Pg. 361	
Fan Specifications Pg. 361	6.6003.1 Surface-Mounted Ducted, 6.6003.2 Inline, 6.6003.3 Through the Wall, 6.6003.4 Multi-Port System, 6.6003.5 Garage Exhaust Fan 6.6288.1 Sound-Rating Limits
Termination Fittings Pg. 363	6.6002.2 Terminations 6.6102.2 Intakes
Duct Sizing Pg. 365	
Duct Materials and Installation Pg. 366	6.6002.1 Ducts, 6.6002.2 Terminations, 6.6003.2 Inline, 6.6003.1 Surface-Mounted Ducted, 6.6003.4 Multi-Port System, 6.6005.2 Kitchen Range, 6.6102.1 Outside Air Ventilation Supply Ducts, 6.6102.2 Intakes, 6.6103.1 Inline or Multi-Port, 6.6202.2 Heat Recovery Ventilator (HRV) and Energy Recovery Ventilator (ERV) Installation
Whole-Building Ventilation Systems Pg. 367	
Exhaust Ventilation Pg. 368	6.6201.1 Installed System Air Flow
Supply Ventilation Pg. 369	6.6102.3 Intake for Ventilation Air to Forced Air System Used for Heating or Cooling

Field Guide Topic	SWS Detail
Balanced Ventilation Pg. 371	6.6202.2 Heat Recovery Ventilator (HRV) and Energy Recovery Ventilator (ERV) Installation
Adaptive Ventilation Pg. 372	
Attic Ventilation Pg. 373	4.1088.1 Attic Ventilation
Attic Ventilation as a Solution for Moisture Problems Pg. 373	
When to Install Attic Ventilation Pg. 373	
Attic Ventilation Requirements Pg. 374	
Power Ventilators Pg. 376	
Unventilated Attics Pg. 376	
Crawl Space Ventilation Pg. 377	2.0401.2 Vented Crawl Space—Venting, 2.0111.2 Crawl Spaces—Pre-Work Qualifications, 2.0111.3 Crawl Spaces—Debris Removal, 2.0404.3 Closed Crawl Spaces—Crawl Space Conditioning, 2.0701.1 Crawl Spaces—Providing Access
Naturally Ventilated Crawl Spaces Pg. 377	2.0401.1 Air Sealing Moisture Precautions, 2.0403.3 Closed Crawl Spaces—Vapor Retarders on Walls
Power-Ventilated Crawl Spaces Pg. 378	2.0401.1 Air Sealing Moisture Precautions

Field Guide Topic	SWS Detail
Conditioned Crawl Spaces Pg. 378	2.0403.2 Closed Crawl Spaces—Ground Moisture Barriers, 2.0404.3 Closed Crawl Spaces—Crawl Space Conditioning
Ventilation for Cooling Pg. 379	
Whole-House Fans Pg. 380	
Window Fans Pg. 381	
Air Circulation Pg. 382	
Evaporative Coolers Pg. 382	3.1602.6 Capping Dual-Cooling Up-Ducts

Chapter 10: Baseload Measures

Baseload energy consumption accounts for a large part of home energy use. This chapter discusses energy savings for refrigeration, entertainment, lighting, laundry, and water heating,

Table 10-1: Levels of Household Electric Baseload Consumption

Indicator	Low	Medium	High
kWh per Year	<4500	4500–8500	>8500
kWh per Month	<375	375–700	>700
kWh per Day	<12	12–23	>23
kWh per Person (Annual)	<1900	1900–3500	>3500

Doesn't include heating, cooling, or water heating. Assumes 2.4 persons per household and average annual consumption of 6500 kWh per household.

Table 10-2: Electrical Consumption of Typical Appliances

Appliance	Annual usage (kWh)	Annual cost
Ten-year-old refrigerator or freezer	1250	$188
New ENERGY STAR refrigerator or freezer	500	$75
Television	100–1000	$15–$150
Clothes dryer	1200	$180
Well pump	500	$75
Furnace fan	500	$75
Computer	50–400	$8–$60
Hot tub, spa	2300	$345
Water bed	1000	$150

Data from Lawrence Berkeley Laboratory and others. Based on 15¢ per kilowatt-hour for electricity.

10.1 Refrigerator Replacement and Maintenance

Refrigerators built after 1993 use less electricity than refrigerators built before that year. Another efficiency increase occurred in 1999 in the refrigerator industry.

10.1.1 Refrigerator Replacement

SWS Detail: 7.8001.1 Refrigerator and Freezer Replacement

Comply with the following requirements when replacing refrigerators.

- ✓ The new refrigerator must fit the existing space.

- ✓ The new refrigerator must be 40% more efficient than the minimum federal standards or be labeled ENERGY STAR.
- ✓ Take refrigerators that are replaced to a facility that is licensed to reclaim their refrigerant and recycle the refrigerator's parts.
- ✓ No refrigerator, taken out of service, may be returned to service by sale, barter, or for free.
- ✓ Instruct the client about location and operation of energy controls such as the thermostats for the refrigerator and freezer.

Some clients use two or more refrigerators in their homes, and this practice results in high electricity usage. Suggest to these clients to consolidate food storage into a large single refrigerator.

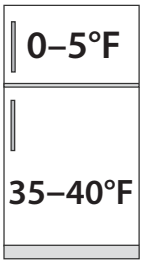

Refrigerator clean and tune: Clean coils and check temperatures. Adjust temperatures that are out of range.

10.1.2 Refrigerator Cleaning and Tuning

SWS Detail: 7.8001.2 Cleaning and Tuning Existing Refrigerators and Freezers

Cleaning and tuning an existing refrigerator can increase its efficiency. Follow these procedures.

- ✓ Clean dirt off clogged coils.

- ✓ Move objects that block airflow around the refrigerator, and ask the client to store the objects elsewhere.
- ✓ Measure refrigerator temperature and verify that it is between 35° and 40° F. Otherwise re-set the thermostat to this temperature range.
- ✓ Measure the freezer temperature, and verify that it is more than or equal to 0° F. If it is colder that 0°, re-set the freezer's thermostat to 0° F.
- ✓ Check the condensation-control switch. If the condensation control is on, the refrigerator door or door frame is being heated. Try turning the switch to "energy saver," which turns the heating elements off. If frost forms on the door, turn the control back on.
- ✓ Explain the function of the condensation control to clients. If the energy-saver setting isn't adequate for very humid weather, the occupants could toggle setting.

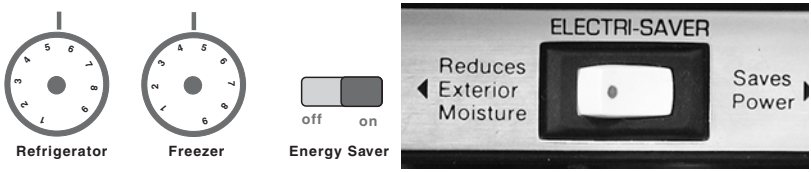

Refrigerator energy controls: Refrigerator and freezer temperatures aren't typically labeled in degrees, so there might be some trial and error in getting the setting within range. The condensation control is either on and heating the door perimeter or off and not heating the door perimeter.

10.1.3 Refrigerator Metering Protocol

Older refrigerators use from 1000 to 2000 kWh per year. Newer ENERGY STAR refrigerators use less than 400 kWh per year. You need a minimum of two hours to accurately measure refrigerator energy consumption using a recording watt-hour meter.

There are three options for evaluating refrigerator energy consumption for replacement.

1. Meter and/or evaluate the refrigerator following the requirements of the Massachusetts Utility Program Administrator's guidance.
2. A second option is to use the resources included in the *WAPTAC Refrigerator Guide*. These resources include a database of refrigerators by model with approximate electricity usage and a refrigerator analysis tool.
3. The third option is to follow the metering procedure presented here.

A number of unusual circumstances could reduce the accuracy of the metering, including the following.

- A quantity of warm food recently placed in the refrigerator.
- Abnormally high or low ambient temperature. For example: refrigerators in garages during the summer or winter; or refrigerators in vacant homes where heating or cooling systems aren't operating.

Recording watt-hour meter: Measures energy consumption over time. The better units can also calculate monthly consumption, or record maximum current draw to help identify the defrost cycle.

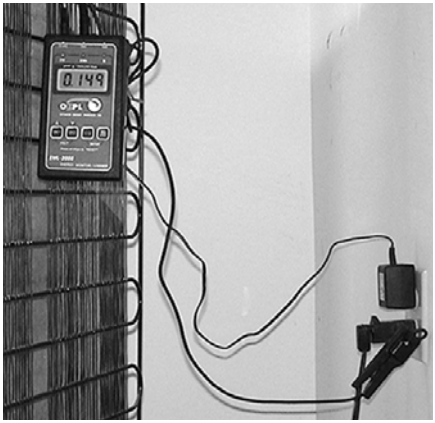

Refrigerator Metering Procedure

If the refrigerator is an automatic-defrost model, you could measure an inaccurate reading if the unit goes into the electric defrost mode during the test period. The following test protocol includes provisions to prevent the defrost mode from activating.

1. Determine if the refrigerator is equipped with automatic defrost. This is usually stated on the manufacturer's data plate or on the outside of the unit. If the refrigerator is equipped with a manual defrost, proceed to step 3.
2. If the unit is equipped with automatic defrost, follow this sub-procedure.
   a. Locate the defrost timer. This small electrical-control box is located in the refrigerator or behind the front kick-plate. The defrost timer may also be located on the rear of the unit.

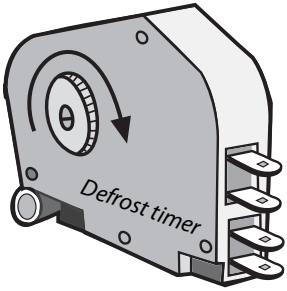

Defrost Timer: The defrost timer initiates the defrost cycle to melt ice at regular intervals.

   b. Open the defrost timer and locate the advance pinion. This shaft usually has a screwdriver slot to allow you to manually advance the timer.
   c. Turn the timer clockwise (you can break the timer if you turn it counter-clockwise) until you hear a loud click. This turns the defrost heaters on. Turn it further until it clicks loudly again, turning the defrost heaters off.
   d. You can now perform your measurement since the timer won't call for defrost heat again for several hours.
3. Connect the refrigerator to a recording watt-hour meter. Run the test for at least two hours. You don't need to stop at two hours, and a longer measurement is better. During the test, avoid opening the refrigerator, or do so briefly.

4. At the end of the test, read the kilowatt/hours of consumption measured by the meter. Divide this number by the number of hours in the test. This gives you the number of kilowatt-hours consumed each hour. Multiply this number times the total number of hours in a year (8760 hours per year). The product of this calculation is the annual kilowatt-hours of electrical usage.

5. **Remove the meter and plug the refrigerator back into its outlet.**

length of test in hours

number of hours in a year

0.32 ÷ 2 = 0.16 x 8760 = 1402

kilowatt-hours consumed

hourly consumption in kilowatt-hours

predicted annual consumption in kilowatt-hours

Refrigerator consumption example: In this example, a 2-hour measurement was performed. During this time, the appliance consumed 0.32 kilowatt-hours of electricity, or 0.16 kilowatt-hours per hour. The annual total of 1402 kilowatt-hours, calculated above, is well beyond the 450 kilowatt-hours per year consumed by today's most efficient refrigerators.

Table 10-3: Kilowatt-Hours per Hour & Kilowatt-Hours per Year

kWh/hour	kWh/year	kWh/hour	kWh/year
0.23	2000	0.16	1400
0.22	1900	0.15	1300
0.21	1800	0.14	1200
0.19	1700	0.13	1100
0.18	1600	0.11	1000
0.17	1500	0.10	900

10.2 Entertainment and Computer Systems

SWS Detail: 7.8002.1 Entertainment and Computer Systems and Components Replacement

Computer power settings: Go to your computer's control panels and set the *power-saver control* to rest the display and sleep the computer after some chosen time of inactivity.

The purpose of this section is to help clients conserve electricity that they use for entertainment and computing.

- ✓ Advise clients to buy equipment labeled Energy Star.
- ✓ Advise clients to buy electronic equipment that doesn't need to be left on when not being used.
- ✓ Standby losses for electronic equipment must be one watt or less.
- ✓ Patch all holes, made for installation of electronic equipment, in an airtight and weather-tight manner.
- ✓ Read the operating manual and enable all energy-saving features of an appliance. Explain the energy-saving features to the client.
- ✓ Verify that clients have operating instructions for their electronic equipment or that they know how to access instructions using the Internet.
- ✓ Recycle or dispose of equipment using principles of the Environmental Protection Agency (EPA) Responsible Recycling (R2) Initiative.

Smart plug strips: A variety of plug strips with built-in controls are now available. The plug strips interrupts power to appliances by remote control, on a time schedule, or by sensing occupancy.

10.3 Lighting-Efficiency Improvements

Lighting-efficiency improvements include bulb (lamp) replacement, daylighting, fixture replacement, and energy-efficient lighting controls.

10.3.1 Daylighting

SWS Detail: 7.8003.1 Lighting Upgrade

Use daylighting as appropriate to save electricity.

- ✓ Replace, adjust, or repair window coverings to maximize useful daylight where appropriate.
- ✓ Design and use active and passive day lighting where appropriate.

10.3.2 Lighting Retrofit Equipment

SWS Detail: 7.8003.1 Lighting Upgrade

Consider The following requirements when retrofitting lighting equipment.

- ✓ Ask the customer about their lighting usage, and explain the electrical savings potential for switching to compact fluorescent lamps (CFLs) or light-emitting diodes (LEDs).

- ✓ Demonstrate a CFL or LED bulb to the customer if they're hesitant about replacing their incandescent light bulbs.
- ✓ Select the type of CFL or LED and its wattage, according to its use and the customer's accustomed light level.

LED can replacement

LED bulb

LED lamps and fixtures: LEDs are rapidly gaining market share because of their superior energy efficiency and long life.

- ✓ Turn on each CFL or LED after installation to ensure that it operates. Make sure that the customer is satisfied with the light level.
- ✓ Replace halogen torchieres with fluorescent torchieres.
- ✓ All bulbs, fixtures, and controls must be appropriate for the intended application (for example: enclosed, dimmable, indoor, outdoor).
- ✓ Select bulbs, fixtures, and controls to provide the brightness and light quality required in that application (for example: task lighting, walkway lighting, night lights).
- ✓ Selected equipment should have the highest level of efficiency within a technology, such as bulbs, fixtures, or controls.

- ✓ All bulbs, fixtures, and controls must be ENERGY STAR® rated where applicable.
- ✓ When possible, select bulbs, fixtures, and controls that employ the latest energy-efficient lighting technology.
- ✓ Bulb wattage must not exceed rated wattage of the light fixture.
- ✓ Select bulb replacements based on expected life span, light quality, and lifetime energy use.
- ✓ Install occupancy sensing controls where appropriate.
- ✓ All bulbs, fixtures, and controls will be UL-approved and installed according to local code(s) and *NFPA 70 National Electric Code*
- ✓ Inform customers about proper recycling of fluorescent bulbs by stores, municipal waste departments, or other recycling organizations.
- ✓ Replace fluorescent light ballasts containing polychlorinated biphenyls (PCBs) according to the EPA's *Healthy Indoor Environment Protocols for Home Energy Upgrades.*

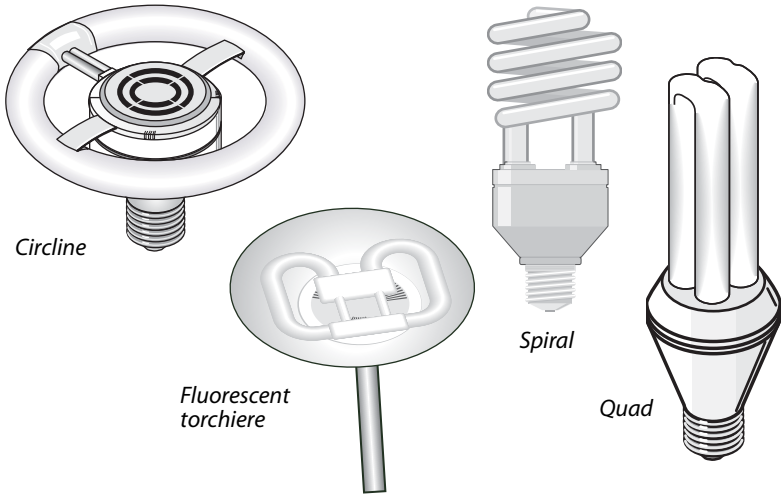

Compact fluorescent lamps: These advanced lamps use about one-third of the electricity of the incandescent lamps they usually replace, and they last about ten times as long.

10.4 Clothes Washer Selection/Replacement

Observe the following standards to minimize the energy consumption of clothes washers.

10.4.1 Clothes Washer Selection

SWS Detail: 7.8004.1 Washing Machine

Comply with these requirements when selecting a new clothes washer.

- ✓ Select clothes washers that meet or exceed Energy Star® and WaterSense® specifications.
- ✓ Maintain adequate clearance around appliance when fit into the available space, so access to cabinets and light switches aren't blocked.
- ✓ Appliance must be covered by a minimum one-year warranty.

- ✓ Standby losses for clothes washers must be one watt or less.

10.4.2 Clothes Washer Installation

SWS Detail: 7.8004.1 Washing Machine

Comply with these requirements when installing a new clothes washer. This information isn't an approved WAP activity and this section is provided for informational and Client Education purposes.

- ✓ Install clothes washers in accordance with manufacturer specifications, (including leveling, plumbing connections, electrical connections) and meet all applicable codes.
- ✓ Install shut-off valves on hot and cold supply water if not already present.
- ✓ If located in conditioned or finished area, install an overflow pan and drain the pan to a safe location.
- ✓ Air seal any penetrations to the exterior of the home created by the washer's installation.
- ✓ Demonstrate energy-related appliance controls to the occupant.
- ✓ Provide specific information about proper maintenance of the washer to the occupant.
- ✓ Provide warranty information, operation manuals, and installer to the owner.

10.5 Clothes Dryer Selection/Replacement

The following standards minimize the energy consumption of clothes dryers.

10.5.1 Clothes Dryer Selection

SWS Detail: 7.8004.2 Clothes Dryer Replacement

Comply with these requirements when selecting a new clothes dryer.

- ✓ Adequate clearance will be maintained around appliance when fit into available space so access to cabinets and light switches are not blocked.
- ✓ Appliance will be covered by a minimum one-year warranty.
- ✓ Equipment will be selected with features that reduce peak electric demand and absolute energy use.
- ✓ Standby losses for equipment will be one watt or less.

10.5.2 Clothes Dryer Installation

SWS Detail: 7.8004.2 Clothes Dryer Replacement

Install the appliance in accordance with manufacturer specifications and all applicable codes. If existing venting doesn't meet manufacturer specifications, code, or the following criteria, install new venting using the following specifications.

- ✓ Vent all dryers, other than condensing dryers to the outdoors.
- ✓ Vent appliance to the outdoors using metal-to-metal or UL listed dryer vent.
- ✓ Use only metal clamps on semi-rigid metal and UL listed vent pipes.
- ✓ Install a pest screen at the termination.
- ✓ Insulate at least 3 feet of the vent closest to the home's exterior to a minimum of R-6.

- ✓ If a combustion appliance is used, perform combustion-safety testing as described in *"Combustion-Safety Evaluation" on page 233*.
- ✓ Seal penetrations to the outdoors created by the appliance installation to an airtight condition.
- ✓ Demonstrated energy-related dryer controls to the occupant.
- ✓ Provide specific information of the proper maintenance of the equipment to the occupant.
- ✓ Provide warranty information, operation manuals, and installer contact information to the occupant.
- ✓ Recycle or remove and dispose of replaced appliances in accordance with local regulations, including older equipment switches containing mercury.

10.5.3 Clothes Dryers Service and Venting

SWS Detail: 6.6005.1 Clothes Dryer

Clogged clothes-dryer vents are a leading cause of house fires. The drying time of a load of laundry is determined by the dryer installation and the amount of lint in the dryer, vent piping, and vent termination. Lint builds up over time and slows drying time, increasing energy use and cost. The original installation can also cause excessive drying time when flexible vents are excessively long, kinked, or restricted in some other way.

Vinyl flexible dryer vent isn't an approved dryer vent material and should be replaced with metal flexible dryer vent if found as part of an ECM or incidental repair.

Service Procedures

Observe the following suggestions when servicing clothes dryers to prevent fires, reduce drying time, improve energy efficiency, and reduce lint build-up.

- ✓ Unplug the clothes dryer before making any improvements.
- ✓ Remove the vent pipe and vent termination and clean all lint out of them.
- ✓ Clean lint out of the electric heating elements and the air-way around them.
- ✓ Inspect the airway at the dryer's vent connection, and clean the lint out of it.

Dryer Exhaust Venting Requirements

Follow these venting requirements for clothes dryers when servicing dryers.

- ✓ Dryer vents should be piped in 4-inch-diameter rigid aluminum or galvanized pipe whenever and wherever possible.
- ✓ Don't use screws or rivets to join rigid pipe sections because they collect lint. Join and seal the sections with silicone caulking.
- ✓ Exhaust venting duct must be supported at maximum 4-foot intervals.
- ✓ Use short, stretched pieces of flexible metal dryer vent, labeled UL 2158A, to connect the dryer to the rigid vent through difficult framing or to allow dryer to be moved in and out. Make connections using rigid fittings installed male-to-female in the direction of exhaust flow to prevent lint build-up.
- ✓ Fasten UL listed semi-rigid sheet metal to rigid metal with a clamp.
- ✓ Other specialized duct fittings will be fastened in accordance with manufacturer specifications.
- ✓ Seal duct connection with foil tape labeled UL 181B or 181B-M.
- ✓ Install a booster fan for dryer ducts exceeding 35 feet in duct equivalent length. When calculating duct length, add 5 feet for each 90° bend and 2.5 feet for each 45° bend.

✓ Provide make-up air if you measure excessive depressurization or if the dryer moves 200 CFM or more.

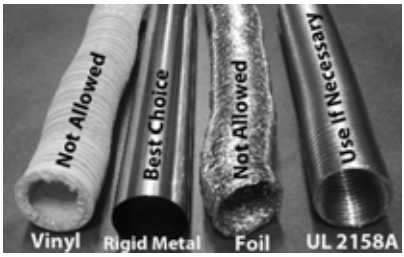

Dryer vent types: Clothes dryer energy-efficiency depends on the type of vent material and the equivalent length of the vent.

10.6 Water-Heating Energy Savings

For safety information on combustion water heaters, see *"Spillage and CO Testing" on page 239*.

The most important tasks in evaluating hot water energy savings are determining the water heater's insulation level, measuring the shower's flow rate, and measuring the water temperature. Any installation, removal or repair work done on all domestic hot water systems must be completed by a heating contractor licensed by the Commonwealth of Massachusetts.

Table 10-4: Water Heating Consumption According to Family Size

Number of Residents	Annual kWh	Annual Therms	Gallons Per Day
1	2700	180	25
2	3500	230	40
3	4900	320	50
4	5400	350	65
5	6300	410	75
6	7000	750	85

Author's interpretation of data from single-family homes with existing water heaters from Energy Information Administration, Lawrence Berkeley Laboratory, *Home Energy Magazine*, and others.

10.6.1 Water-Saving Shower Heads and Faucet Aerators

SWS Detail: 7.8101.1 Shower Head and Faucet Aerator

Most families use more hot water in the shower than for any other use. A low-flow shower head reduces this consumption.

- ✓ Water-saving shower heads must be rated for a flow of ≥2.5 gallons per minute.
- ✓ Water-saving aerators must be rated for a flow of ≥2.2 gallons per minute.
- ✓ Use caution in removing the existing shower head or aerator from old, fragile plumbing fixtures.
- ✓ The shower or faucet flow rate must be satisfactory to the occupants and be documented.
- ✓ Recycle replaced shower heads and aerators.

Water-saving shower heads: Two styles of water-saving shower heads give consumers a choice between steamy showers and less steamy ones.

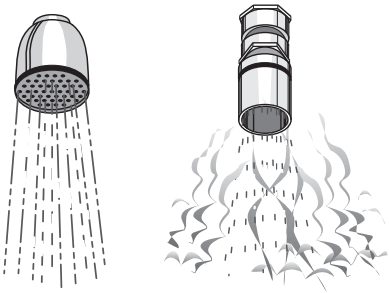

Measuring Shower or Faucet Flow Rate

You can determine flow rate by measuring the time needed to fill a one-gallon plastic container. If the one-gallon container fills in less than 20 seconds, your flow rate is more than 3 gallons per minute.

1. Start the shower and set it to the maximum showering rate.
2. Start a stopwatch at the same time you move the container underneath the shower, capturing its entire flow.
3. Record the number of seconds and divide 60 by that number to find gallons per minute.

Measuring shower flow rate: If you divide 60 by the number of seconds needed to fill a gallon container, you will calculate flow in gallons per minute.

$$\frac{1\text{ gal}}{15\text{ sec}} \times \frac{60\text{ sec}}{1\text{ min}} = 4\ \frac{\text{gal}}{\text{min}}$$

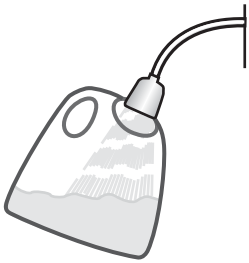

10.6.2 Water Heater Blankets

SWS Detail: 7.8102.2 Storage-Type Appliance, 7.8103.1 Storage-Type Appliance

If you install an R-11 insulation blanket, follow these guidelines to avoid fire hazards and to simplify future service. **Don't insulate the water heater if the manufacturer's label prohibits it.**

Gas Water Heaters

When you install insulation on gas water heaters, use these specifications.

- ✓ Keep insulation at least 2 inches away from the gas valve and the burner access panel. Don't install insulation below the burner access panel.
- ✓ Don't cover the pressure relief valve or discharge line with insulation.
- ✓ Don't insulate the tops of gas-fired water heaters because the insulation can obstruct the draft diverter.

Electric Water Heaters

When you install insulation on electric water heaters, use these specifications.

- ✓ Mark the blanket to locate the thermostat and heating element access plates or cut the blanket at these locations.
- ✓ When you cut the blanket for the thermostats, cut the bottom and sides but not the top. This creates a hinge that allows the door in the insulation to swing open and closed.
- ✓ Cover the top of the water heater with insulation.
- ✓ Don't cover the pressure relief valve and discharge line with insulation.
- ✓ If you specify insulation for an existing water heater which has a relief valve but no discharge line, install a discharge line outside the insulation to within 6 inches of the floor.

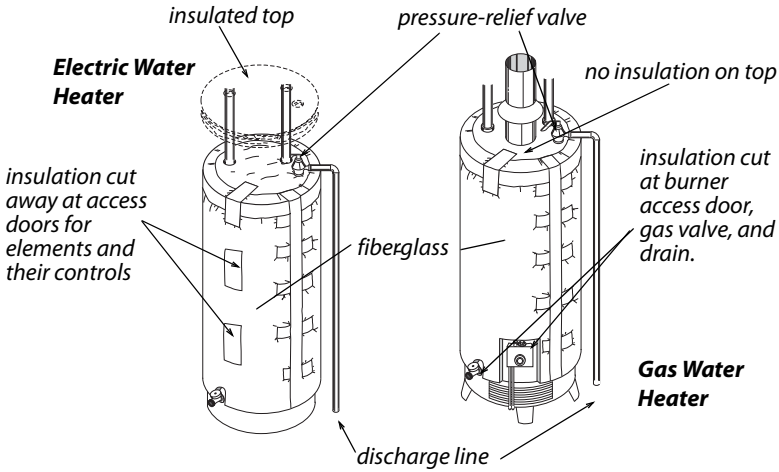

Water heater insulation: Insulation should be installed carefully so it doesn't interfere with the burner, elements, draft diverter, FVIR combustion intake, or pressure relief valve and discharge line.

10.6.3 Measuring and Adjusting Hot Water Temperature

SWS Detail: 7.8103.1 Storage-Type Appliance, 7.8103.2 On-Demand Appliance

Use the following instructions to adjust water temperature.

- ✓ Shut off power to an electric water heater before opening thermostat access panels.
- ✓ Measure the water temperature at the nearest faucet to the water heater. Reduce the temperature to 120° F with the customer's permission.
- ✓ On electric water heaters, set both upper and lower thermostats to the same temperature.

Setting hot-water temperature: Getting the temperature correct can take a few measurements and re-adjustments.

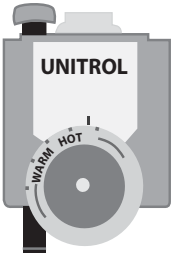

Gas water heater control

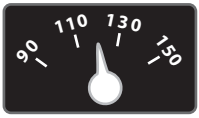

Electric water heater control

10.6.4 Heat Traps and Water-Heater Pipe Insulation

SWS Detail: 7.8103.1 Storage-Type Appliance, 7.8103.2 On-Demand Appliance

Install heat traps if the water heater has no built-in heat traps. Heat traps are piping loops or valves that prevent thermo-siphoning of water in and out of the piping near the water heater.

Install pipe insulation to slow convection of hot water into the water lines near the tank.

- ✓ Interior diameter of pipe sleeve must match exterior diameter of pipe.
- ✓ Insulate the first 6 feet of hot and cold water pipe from the water heater.
- ✓ Use pipe wrap with a minimum thickness of 1 inch and a minimum R-value of 2. Cover elbows, unions and other fittings with the same insulation thickness as the pipe.
- ✓ Corners must be mitered, tight fitting, sealed and secured with appropriate material to prevent failure.

- ✓ Keep pipe insulation 6 inches away from single-wall vent pipe and 1 inch away from Type B vent.
- ✓ Fasten pipe insulation with zip ties, tape, or other approved method.

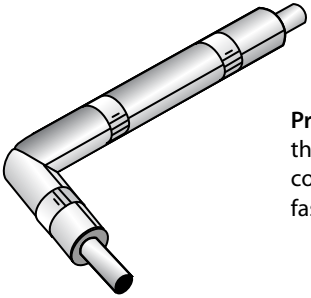

Properly installed pipe insulation: Will be the right size for the pipe, will completely cover the pipe, including bends, and will be fastened tightly to the pipe.

10.7 Selecting Storage Water Heaters

Storage water heaters are the most common water heaters found in homes.

10.7.1 Determining a Storage Water Heater's Insulation Level

SWS Detail: 7.8102.1 Water Heater Selection, 7.8102.2 Storage-Type Appliance

Common storage water heaters consist of a tank, insulation surrounding the tank, and an outer shell. There is typically either 1 or 2 inches of insulation surrounding the tank. The insulation is either fiberglass or polyisocyanurate.

Follow this procedure to determine the water heater's insulation level.

- ✓ Look for a listing of R-value on a label on the water heater.

- ✓ Find a hole in the outer shell where the flue pipe emerges or where plumbing connects. Look around the hole for either fiberglass or polyisocyanurate insulation.
- ✓ If the hole isn't large enough to see the insulation level on an electric water heater, try removing the access panel for the heating element after disconnecting power from the unit.
- ✓ You may just be able to see the gap between the tank and outer shell. If you can't see this gap, use a ruler or probe to push through the insulation along side of a pipe connecting to the tank until the probe hits the steel tank to determine thickness. Make sure that the probe is against the tank and not against a nut welded to the tank.
- ✓ If additional tank insulation is installed, it must be at least R-11. **Do not install insulation if the manufacturer's label on the water heater prohibits it**.

Identifying Tank Insulation

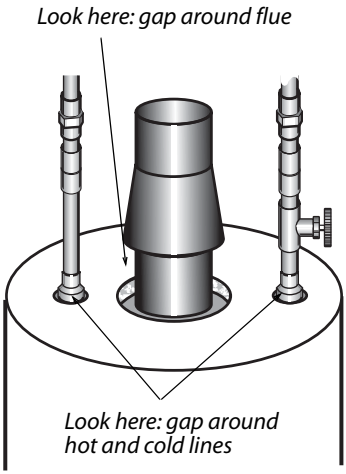

Table 10-5: Insulation R-Values

Insulation/thickness	R
Fiberglass 1 inch	3
Fiberglass 2 inches	6
PIC1 inch	6.5
PIC 2 inches	13
PIC 3 inches	19.5

10.7.2 Storage Water-Heater Selection

SWS Detail: 7.8102.1 Water Heater Selection, 7.8102.2 Storage-Type Appliance

Existing gas water heaters, including propane, typically use 200 to 400 therms per year. New gas water heaters use as little as 175 therms per year, resulting in a savings of between 25 and 225 therms per year. Similar savings are possible by replacing electric water heaters. Consider the following recommendations for specifying water heaters.

- A replacement gas or oil storage water heater should have an energy factor of at least 0.67 and be insulated with at least 2 inches of foam insulation.
- A replacement electric water heater should have an energy factor of at least 0.93 and be insulated with at least 2.5 inches of foam insulation.

10.8 Alternative Water-Heaters

Weatherization programs sometimes choose alternative water-heating products to improve efficiency and safety.

10.8.1 Sidewall-Vented Gas Storage Water Heaters

SWS Detail: 2.0201.2 Combustion Safety, 7.8102.1 Water Heater Selection, 7.8102.2 Storage-Type Appliance

When gas storage water heaters cause persistent venting problems, specify a sidewall-venting water heater. Two common types of these water heaters are shown here.

- ✓ Choose a sealed-combustion sidewall-vented gas water heater, if possible. Next best is a fan-assisted unit.

✓ The replacement water heater must be installed in accordance with manufacturer specifications, 2012 IRC G2427.8, and additional applicable codes.

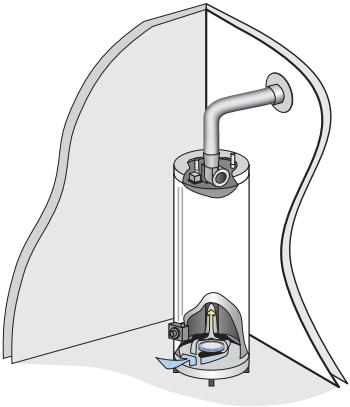

Fan-assisted water heater: The fan allows horizontal venting. The water heater may be open combustion or sealed combustion.

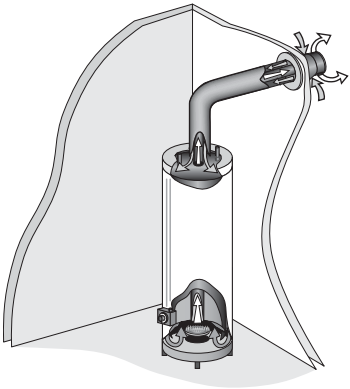

Direct-vent water heater: Moves combustion air and flue gases through a concentric pipe system without a draft fan.

10.8.2 On-Demand Gas Water Heaters

SWS Detail: 7.8102.1 Water Heater Selection, 7.8102.3 On-Demand Appliance

On-demand gas water heaters are more efficient and cost less to operate compared to conventional gas storage water heaters. However, on-demand gas water waters are more expensive to install and may have shorter lifespans compared to storage water heaters.

✓ Choose a sealed-combustion on-demand gas water heater, if possible. Next best is a fan-assisted unit.

10.8.3 Heat Pump Water Heaters

Heat pump water heaters can heat water at up to 2.3 times more efficient than electric-resistance storage water heaters. Heat

pump water heaters use heat from surrounding air to heat water. They cost much more than conventional electric water heaters but are far less costly to operate.

Heat pump water heater: This heat pump water heater has the heating coil (condenser) surrounded by the domestic water.

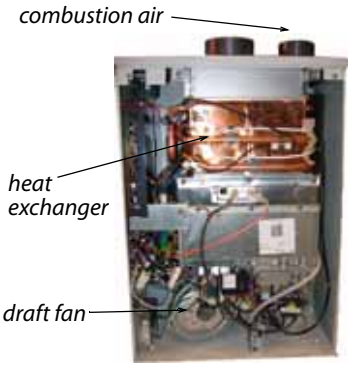

Sealed-Combustion Tankless Water Heater: These expensive water heaters have a tiny market share and save around one-third of energy used by the best storage water heaters.

Table 10-6: Comparison of Advanced Water Heaters

Advanced Water Heater Type	$ Savings*	Expected Lifespan	Major Advantages
High-efficiency storage tank (Oil, gas, electric)	≤$500	8–15 years	Lowest first cost
Instantaneous Tankless (direct fired)	≤$1800	5-15 years	Unlimited hot water
Heat pump	≤$3000	5-15 years	Most efficient electric option

From information supplied by ENERGYSTAR.gov by the Environmental Protection Agency. * Lifetime savings compared to conventional water-heater models and same fuel.

10.9 WATER HEATER INSTALLATION

SWS Detail: 7.8102.3 On-Demand Appliance, 7.8102.2 Storage-Type Appliance

Follow these procedures when installing a storage water heater or an alternative water heater.

- ✓ Replacement water heater must have a pressure-and-temperature relief valve with a discharge line that terminates less than 6 inches from the floor into a floor drain or drain pan.
- ✓ The discharge pipe should be made of rigid metal pipe or approved high-temperature plastic pipe.
- ✓ Install dielectric unions and a backflow preventer as part of a water heater replacement if any of these components are missing from the existing installation.
- ✓ Install an expansion tank for all storage water-heater replacements.

- ✓ Install an emergency drain pan under each replacement water heater that is installed in an area that would be damaged by a leak.
- ✓ Install a $^{3}/_{4}$-inch drain line to the tapping on drain pan. Terminate the drain line in a floor drain or outdoors, at least 6 inches above grade.
- ✓ Install heat traps on the water heater's inlet and outlet piping if the manufacturer hasn't provided traps.
- ✓ Adjust water temperature to 120° F or to the lowest setting acceptable to occupants.

For a complete list of DOE installation requirements for water heaters, see *SWS Detail 7.8102.2 Storage-Type Appliance*.

10.10 Comparing Water Heaters

The choice of fuel and model for a storage water heater isn't easy and it involves many factors including safety, reliability, efficiency, and installed cost.

10.10.1 Safety Comparison

Conventional direct-fired gas water heaters vent their combustion by-products to a gravity vented chimney. They can spill products of combustion into the living space, especially if the chimney isn't tall enough, warm enough, or sized properly. Sharing of a main chimney with another combustion appliance can cause venting problems. If the furnace or boiler is replaced with a sealed-combustion or horizontal-vented model, the chimney may then be too big for the remaining combustion water heater.

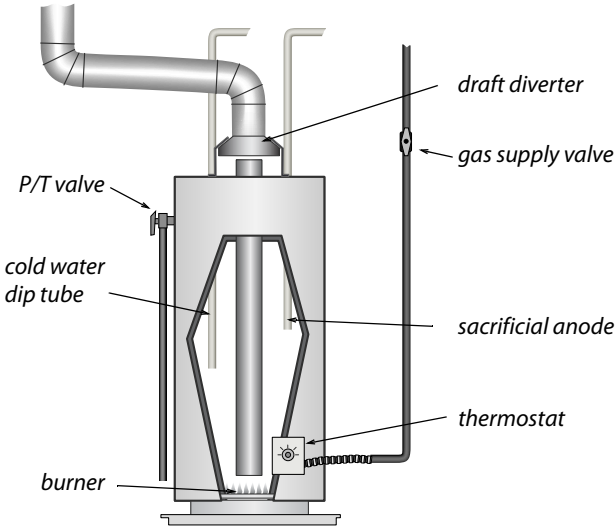

Standard gas water heater: These open combustion appliances are often troubled by spillage and backdrafting.

Electric water heaters have no chimney and need no combustion air, which makes them safer for buildings with low natural air leakage, compared to conventional gas storage water heaters.

Electric water heaters have no products of combustion to worry about. However, because their recovery capacity is generally much less than gas water heaters of the same size, there is a greater chance of someone trying to compensate for a cold shower by setting the electric water heater to an unsafe temperature where occupants could get scalded.

10.10.2 Reliability Comparison

Storage water heaters are popular because they are inexpensive and reliable. Both gas and electric storage water heaters are simpler and more reliable than more expensive and complex water heaters. The lifespan of storage water heaters depends on local water quality and the quality of the water heater's tank.

Most heaters have glass-lined steel tanks which are typically warranted for five years. All types of heaters are available with

larger or additional sacrificial anodes, which are pieces of metal that corrode before the tank does, thereby extending the tank life and maybe the warranty. If you buy a ten-year guarantee heater instead of a five-year guarantee heater, this choice might reduce the future cost of replacement and possible water damage from tank leaks.

10.10.3 Efficiency and Energy Cost Comparison

Conventional gas storage water heaters are rated at about 80% steady-state efficiency. However, whenever a storage water heater isn't firing, it's losing heat up the chimney. This happens when cold air, flowing through the heater, is warmed by the heater and escapes up the flue. This off-cycle heat loss reduces annual efficiency drastically and may result in the water heater's energy factor (EF) being less than 0.60.

The exact EF for a particular storage water heater is difficult to estimate because of many factors including: chimney height, chimney diameter, wind, the home's air-tightness, outdoor temperature, and water heater temperature setpoint. With these variables the actual EF can vary from 0.60 to 0.40 or even lower. Nevertheless, gas storage water heaters cost less to operate than electric water heaters with the same insulation level.

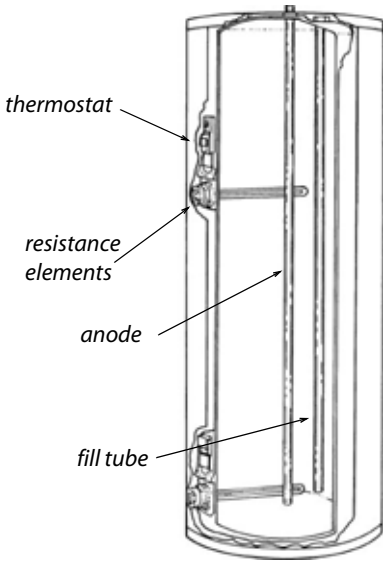

Standard electric storage water heater: Electric water heating is more expensive than gas or oil but safer. Electric water heaters should have at least 2 inches of foam insulation.

Electricity is approximately 2.5 times as expensive as natural gas. However, electric water heaters have no chimney and therefore no chimney losses. They do lose heat through the insulation jacket, which brings their EF down to around 0.90. Heat-pump water heaters have an operating efficiency of 200% because they heat water with heat from the surrounding air. But because the electricity production and transmission system in the U.S. is about 31% efficient, the overall energy use and cost for heating water with electricity is still higher than with gas.

10.11 SWS Alignment

Field Guide Topic	SWS Detail
Refrigerator Replacement and Maintenance Pg. 392	
Refrigerator Replacement Pg. 392	7.8001.1 Refrigerator and Freezer Replacement

Field Guide Topic	SWS Detail
Refrigerator Cleaning and Tuning Pg. 393	7.8001.2 Cleaning and Tuning Existing Refrigerators and Freezers
Refrigerator Metering Protocol Pg. 394	
Entertainment and Computer Systems Pg. 398	7.8002.1 Entertainment and Computer Systems and Components Replacement
Lighting-Efficiency Improvements Pg. 399	
Daylighting Pg. 399	7.8003.1 Lighting Upgrade
Lighting Retrofit Equipment Pg. 399	7.8003.1 Lighting Upgrade
Clothes Washer Selection/ Replacement Pg. 402	
Clothes Washer Selection Pg. 402	7.8004.1 Washing Machine
Clothes Washer Installation Pg. 403	7.8004.1 Washing Machine
Clothes Dryer Selection Pg. 404	
Clothes Dryer Selection Pg. 404	7.8004.2 Clothes Dryer Replacement
Clothes Dryer Installation Pg. 404	7.8004.2 Clothes Dryer Replacement
Clothes Dryers Service and Venting Pg. 405	6.6005.1 Clothes Dryer
Water-Heating Energy Savings Pg. 407	
Water-Saving Shower Heads and Faucet Aerators Pg. 408	7.8101.1 Shower Head and Faucet Aerator

Field Guide Topic	SWS Detail
Water Heater Blankets Pg. 409	7.8103.1 Storage-Type Appliance, 7.8102.2 Storage-Type Appliance
Measuring and Adjusting Hot Water Temperature Pg. 411	7.8103.1 Storage-Type Appliance, 7.8103.2 On-Demand Appliance
Heat Traps and Water-Heater Pipe Insulation Pg. 412	7.8103.1 Storage-Type Appliance, 7.8103.2 On-Demand Appliance
Selecting Storage Water Heaters Pg. 413	
Determining a Storage Water Heater's Insulation Level Pg. 413	7.8102.1 Water Heater Selection, 7.8102.2 Storage-Type Appliance
Storage Water-Heater Selection Pg. 415	7.8102.1 Water Heater Selection, 7.8102.2 Storage-Type Appliance
Alternative Water-Heaters Pg. 415	
Sidewall-Vented Gas Storage Water Heaters Pg. 415	2.0201.2 Combustion Safety, 7.8102.1 Water Heater Selection, 7.8102.2 Storage-Type Appliance
On-Demand Gas Water Heaters Pg. 416	7.8102.1 Water Heater Selection, 7.8102.3 On-Demand Appliance
Heat Pump Water Heaters Pg. 416	
Water Heater Installation Pg. 418	7.8102.3 On-Demand Appliance, 7.8102.2 Storage-Type Appliance
Comparing Water Heaters Pg. 419	

Field Guide Topic	SWS Detail
Safety Comparison Pg. 419	
Reliability Comparison Pg. 420	
Efficiency and Energy Cost Comparison Pg. 421	

CHAPTER 11: MOBILE HOMES

Mobile homes are covered by their own details and outcomes in the SWS, which refers to mobile homes as manufactured homes. These two names refer to the same type of housing. We prefer the term "mobile home." In this chapter, we cover mobile-home air sealing, insulation, windows, doors, and heating systems.

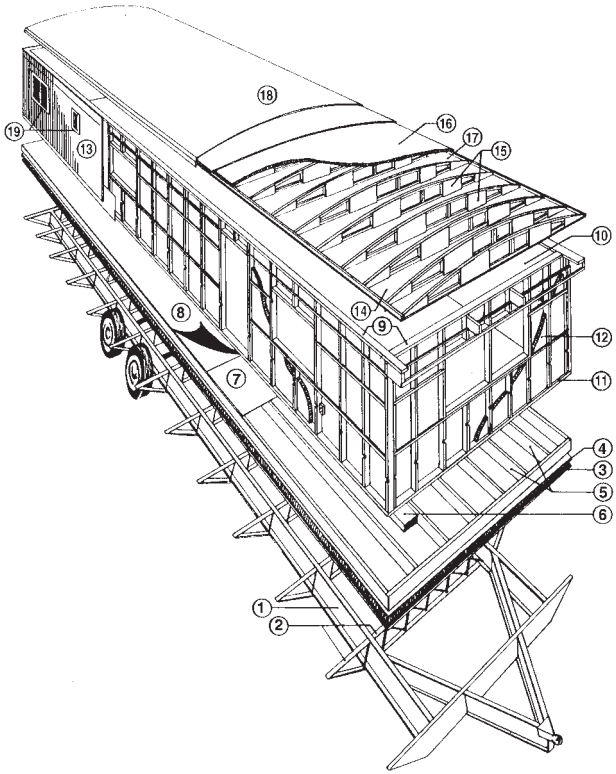

Typical components of a mobile home: 1–Steel chassis. 2–Steel outriggers and cross members. 3–Underbelly. 4–Fiberglass insulation. 5–Floor joists. 6–Heating/air conditioning duct. 7–Decking. 8–Floor covering. 9–Top plate. 10–Interior paneling. 11–Bottom plate. 12–Fiberglass insulation. 13–Metal siding. 14–Ceiling board. 15–BOWSTRING trusses. 16–Fiberglass insulation. 17–Vapor barrier. 18–Galvanized steel one-piece roof. 19–Metal windows.

11.1 Mobile Home Air Sealing

SWS Detail: 3.1101 Manufactured Housing Walls

The location and relative importance of mobile home air leaks was a mystery before blower doors. Some mobile homes are fairly airtight, and others are very leaky. Air leakage serves as ventilation in most mobile homes. Comply with the whole-building ventilation standards outlined in *"Whole-Building Ventilation" on page 356*.

A duct airtightness tester, which pressurizes the ducts and measures their air leakage, is the best way to measure and evaluate duct air sealing. *See "Evaluating Duct Air Leakage" on page 309.* For simply locating duct leaks, the blower door used in conjunction with a pressure pan does a good job. *See "Pressure Pan Testing" on page 310.*

Most mobile home duct sealing is performed through the belly. This work is more difficult once the belly has been re-insulated. Inspect the ductwork and seal any major leaks, such as disconnected trunk lines, before insulating the belly.

Table 11-1: Air Leakage Locations & Typical CFM_{50} Reduction

Air Sealing Procedure	Typical CFM_{50} Reduction
Patching large air leaks in the floor, walls and ceiling	200–900
Sealing floor cavity used as return-air plenum (*See "Floor return air" on page 432.*)	300–900
Sealing leaky water-heater closet	200–600
Sealing leaky supply ducts	100–500
Installing tight interior storm windows	100–250
Caulking and weatherstripping	50–150

Mobile home shell air leakage is often substantially reduced when insulation is installed in roofs, walls, and belly cavities. Prioritize your efforts by performing these tasks in this order.

1. Evaluate the insulation levels. If adding insulation is cost-effective, perform the usual pre-insulation air sealing measures that also prevent spillage of insulation out of the cavity.
2. Install cavity insulation. Perform duct sealing first if the belly is to be insulated.
3. Re-check the air leakage rate.
4. Perform additional air sealing as needed.

11.1.1 Shell Air Leakage Locations

SWS Details: 3.1001.4 General Penetrations (Electrical, HVAC, Plumbing, Vent Termination, Recessed Lighting)

Blower doors have pointed out the following shell locations as the most serious air leakage sites.

- ✓ Plumbing penetrations in floors, walls, and ceilings. Water-heater closets with exterior doors are particularly serious Air Leakage problems, having large openings into the bathroom and other areas
- ✓ Torn or missing underbelly, exposing flaws in the floor to the ventilated crawl space
- ✓ Large gaps around furnace and water heater chimneys
- ✓ Severely deteriorated floors in water heater compartments
- ✓ Gaps around the electrical service panel box, light fixtures, and fans
- ✓ Joints between the halves of double-wide mobile homes and between the main dwelling and additions

Note: Window and door air leakage is more of a comfort problem than a serious energy problem.

11.1.2 Duct Leak Locations

SWS Detail: 3.1602.11 Air Sealing System

Blower doors and duct testers have pointed out the following duct locations as the most serious energy problems.

- ✓ Floor and ceiling cavities used as return-air plenums — These floor return systems should be eliminated and replaced with return-air through the hall or a large grille in the furnace-closet door.
- ✓ Joints between the furnace and the main duct — The main duct may need to be cut open from underneath to access and seal these leaks between the furnace, duct connector, and main duct. With electric furnaces you can access the duct connector by removing the resistance elements. For furnaces with empty A-coil compartments, you can simply remove the access panel to seal the duct connector.
- ✓ Joints between the main duct and the short duct sections joining the main duct to a floor register
- ✓ Joints between register boots and floor
- ✓ The poorly sealed ends of the duct trunk, which often extend beyond the last supply register
- ✓ Disconnected, damaged or poorly joined crossover ducts
- ✓ Supply and return ducts for outdoor air conditioner units
- ✓ Holes cut in floors by tradesmen.
- ✓ New ductwork added to supply heat to room additions

Be sure to seal floor penetrations and ductwork before performing any belly repair. Pollutants in the crawl space such as mold and dust will be disturbed by repair work and can be drawn into the home by duct depressurization.

See "Pressure Pan Testing" on page 310. See "Sealing Supply Ducts" on page 319.

11.1.3 Belly Pressure Test

SWS Detail: 5.3001.3 Replace Return Air Systems that Incorporate Floor Cavity (Belly) and/or Attic as the Return Air Pathway

Mobile home supply duct leaks pressurize the belly cavity. Follow these steps to perform this rough test to determine if duct leaks are present and their general location.

- ✓ Repair the rodent barrier.
- ✓ Turn on the air handler.
- ✓ Insert a manometer hose into the belly through the rodent barrier and test the pressure with-reference-to the outdoors.
- ✓ Start near the furnace, and work your way toward the ends alongside the trunk line. A pressure rise gives you a rough idea of the location of leaks, size of leaks, and tightness of the nearby rodent barrier.
- ✓ Repair the ducts and re-test.

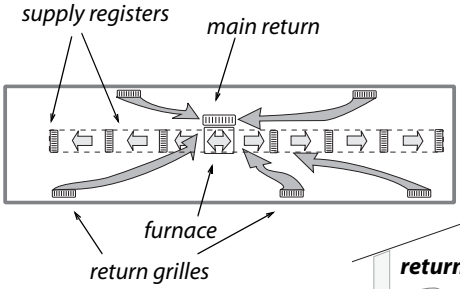

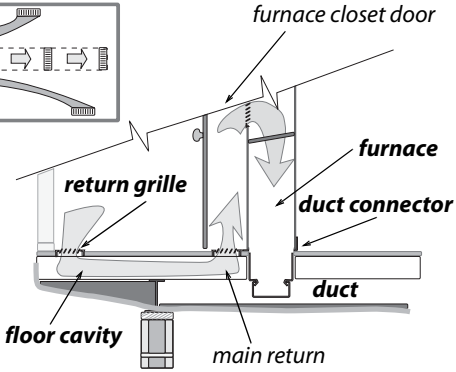

Floor return air: Return-air registers at the floor's perimeter bring air back to the furnace. The floor cavity serves as one big leaky return duct. When leakage is serious, the floor return system should be eliminated.

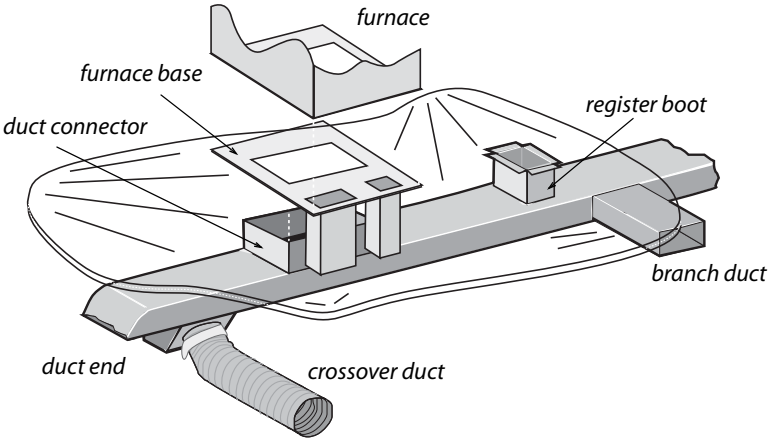

Mobile home ducts: Mobile home ducts leak at their ends and joints — especially at the joints beneath the furnace. The furnace base attaches the furnace to the duct connector. Leaks occur where the duct connector meets the main duct and where it meets the furnace. Branch ducts are rare, but easy to find, because their supply register isn't in line with the others. Crossover ducts are found only in double-wide and triple-wide homes.

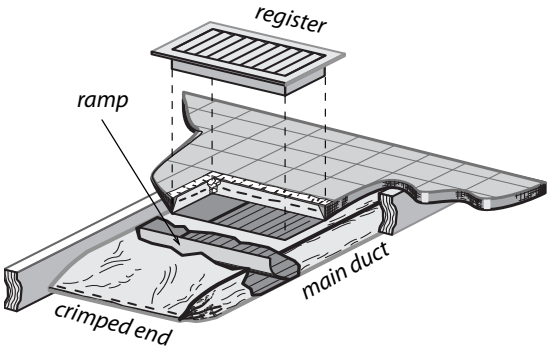

Sealing the end of the main duct: The main duct is usually capped or crimped loosely at each end, creating a major air leakage point. Seal this area and improve airflow by installing a sheet metal ramp, accessed through the last register, inside the duct. Seal the ramp to the ductwork with metal tape and silicone or mastic.

11.2 Mobile Home Insulation

SWS Detail: 2.0104.1 Insulation Worker Safety

Address all significant moisture problems before insulating. The most important single moisture-control measure is installing a ground-moisture barrier. *See also "Preparing for Foundation or Floor Insulation" on page 190.*

11.2.1 Insulating Mobile Home Roof Cavities

SWS Details: 4.1003.10 Installing Fiberglass Blown Insulation for Flat, Bowed, or Vaulted Ceilings (via Interior Access Through the Ceiling), 4.1003.8 Installing Fiberglass Blown Insulation for Flat, Bowed, or Vaulted Ceilings (via Roof Side Lift), 4.1003.9 Installing Fiberglass Blown Insulation for Flat, Bowed, or Vaulted Ceilings (via Exterior Access from Top of Roof), 4.1003.11 Installing Fiberglass Blown Insulation in Roof-Over Constructions

Blowing a closed mobile home roof cavity is similar to blowing a closed wall cavity, only the insulation doesn't have to be as dense. Use fiberglass blowing wool because cellulose is too heavy and absorbs water too readily for use around a mobile home's lightweight sheeting materials.

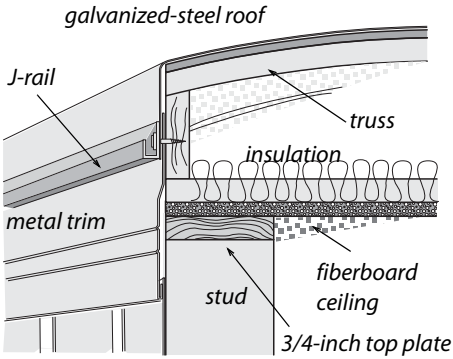

Bowstring roof details: Hundreds of thousands of older mobile homes were constructed with these general construction details.

There are three common and effective methods for blowing mobile home roof cavities.

1. Cutting a square hole in the metal roof and blowing fiberglass through a flexible fill-tube.
2. Disconnecting the metal roof at its edge and blowing fiberglass through a rigid fill-tube.
3. Blowing fiberglass through holes drilled in the ceiling.

Preparing to Blow a Mobile Home Roof

Perform these steps before insulating mobile home roofs.

- ✓ Reinforce weak areas in the ceiling.
- ✓ Inspect the ceiling and seal all penetrations.
- ✓ Take steps to maintain safe clearances between insulation and recessed light fixtures and ceiling fans.

Blowing Through the Top

Blowing through the roof top does a good job of filling the critical edge area with insulation, and the patches are easy to install if you have the right materials. It is important to complete the work during good weather, however, since the roof will be vulnerable to rain or snow during the job.

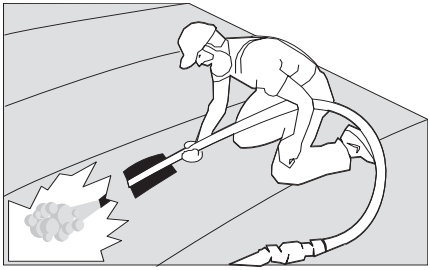

Roof-top insulation: Blowing fiberglass insulation through the roof top is effective at achieving good coverage and density on almost any metal roof.

If the roof contains a strongback running the length of the roof, the holes should be centered over the strongback, which is usually near the center of the roof's width. A strongback is a 1-by-4 or a 1-by-6, installed at a right angle to the trusses near their center point, that adds strength to the roof structure.

1. Cut 10-inch square holes at the roof's apex on top of every second truss. Each square hole permits access to two truss cavities.
2. Use a 2-inch or 2-$^{1}/_{2}$-inch diameter fill-tube. Insert the fill-tube and push it forcefully out toward the edge of the cavity.
3. Blow fiberglass insulation into each cavity.
4. Stuff the area under each square hole with a piece of unfaced fiberglass batt so that the finished roof patch will stand a little higher than the surrounding roof.
5. Patch the hole with a 14-inch-square piece of stiff galvanized steel, sealed with roof cement and screwed into the existing metal roof.
6. Cover the first patch with a second patch, consisting of an 18-inch-square piece of foil-faced butyl rubber.

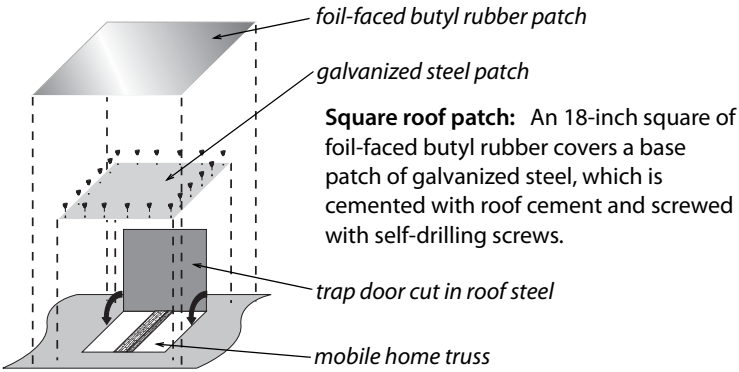

Square roof patch: An 18-inch square of foil-faced butyl rubber covers a base patch of galvanized steel, which is cemented with roof cement and screwed with self-drilling screws.

Blowing a Mobile Home Roof from the Edge

Erect scaffold to do this procedure safely and efficiently. Mobile home metal roofs are usually fastened only at the edge, where the roof joins the wall.

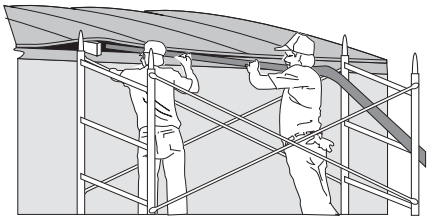

Roof-edge blowing: Use a rigid fill tube to blow insulation through the roof edge. This avoids making holes in the roof itself, though this process requires much care in refastening the roof edge.

1. Remove the screws from the metal j-rail at the roof edge. Also remove staples or other fasteners, and scrape off putty tape.
2. Pry the metal roof up far enough to insert a 2-inch-diameter, 10- to 14-foot-long rigid fill-tube. Two common choices are steel muffler pipe and aluminum irrigation pipe. Inspect the cavity with a bright light to identify any wires or piping that could be damaged by the fill tube.
3. Blow insulation through the fill-tube into the cavity. Turn off the insulation-material feed and blower on the blowing machine when the tube is a couple feet from the roof edge, in order to avoid blowing insulation out through the opening in the roof edge. Stuff the last foot or two with unfaced fiberglass batts.
4. Fasten the roof edge back to the wall using galvanized roofing nails, a new metal j-rail, new putty tape, and larger screws. The ideal way to re-fasten the metal roof edge is with air-driven galvanized staples, which is the way most roof edges were attached originally.

The re-installation of the roof edge is the most important part of this procedure. Putty tape must be replaced and installed as it was originally. This usually involves installing a layer of putty tape or a bead of high quality caulk under the metal roof and another between the metal roof edge and the j-rail.

The advantages of blowing through the edge is that if you have the right tools, including a powered stapler, this method can be

very fast and doesn't require cutting into the roof. The disadvantages of this procedure are that you need scaffolding to work at the edges, and it won't work on roof systems with a central strongback that stops the fill tube from reaching all the way across the roof.

Blowing a Mobile Home Roof from Indoors

The advantage to this method is that you are indoors, out of the weather. The disadvantages include being indoors where you can make a mess — or worse, damage something.

Blowing the roof cavity from indoors requires the drilling of straight rows of 3-inch or 4-inch holes and blowing insulation into the roof cavity through a fill tube.

Follow this procedure.

1. Drill a 3-inch or 4-inch hole in an unseen location to discover whether the roof structure contains a strongback that would prevent blowing the roof cavity from a single row of holes.
2. Devise a way to drill a straight row of holes down the center of the ceiling. If a strongback exists, drill two rows of holes at the quarter points of the width of the ceiling.
3. Insert a flexible plastic fill tube into the cavity, and push it as far as possible toward the edge of the roof.
4. Fill the cavity with tightly packed fiberglass insulation.
5. Cap the holes with manufactured plastic caps. Care must be taken not to damage the holes so that the plastic hole covers fit properly. You can also install a piece of painted wood trim over the line of holes.

Blowing through the ceiling: The contractor pushes the fill-tube into the cavity and out near the edge of the roof. The holes are drilled in a straight line for appearance sake.

11.2.2 Mobile Home Sidewall Insulation

SWS Details: 4.1101.5 Exterior Wall Dense Packing, 4.1104.2 Fiberglass Blown Insulation Installation (Lifting Siding), 4.1104.3 Fiberglass Blown Insulation Installation (via Penetrations Through or Behind the Siding)

The sidewalls of many mobile homes are not completely filled with insulation. This reduces the nominal R-value of the existing wall insulation because of convection currents and air leakage. Consider the following steps for adding insulation to partially filled mobile home walls.

1. Check the interior paneling and trim to make sure they are securely fastened to the wall. Repair holes in interior paneling and caulk cracks at seams to prevent indoor air from entering the wall. Note the location of electrical boxes and wire to avoid hitting them when you push the fill tube up the wall.
2. Remove the bottom horizontal row of screws from the exterior siding. If the vertical joints in the siding inter-

lock, fasten the bottom of the joints together with $^1/_2$-inch sheet metal screws to prevent the joints from coming apart. Pull the siding and existing insulation away from the studs, and insert the fill tube into the cavity with the point of its tip against the interior paneling.

3. Push the fill tube up into the wall cavity until it hits the top plate of the wall. The tube should go in to the wall cavity 7-to-8 feet. It is important to insert the tube so that its natural curvature presses its tip against the interior paneling. When the tip of the fill tube, cut at an angle, is pressed against the smooth paneling, it is least likely to snag the existing insulation on its way up the wall. If the fill tube hits a belt rail or other obstruction, twisting the tube will help its tip get past the obstruction.

4. Stuff a piece of fiberglass batt into the bottom of the wall cavity around the tube to prevent insulation from blowing out of the wall cavity. Leave the batt in-place at the bottom of the wall, when you pull the fill tube out of the cavity. This piece of batt acts as temporary gasket for the hose and insulates the very bottom of the cavity after the hose is removed. This batt also eliminates the need to blow fiberglass insulation all the way to the bottom, preventing possible spillage and overfilling. If you happen to overfill the bottom of the cavity, reach up inside the wall to pack or remove some fiberglass insulation, particularly any that lies between the loose siding and studs.

5. Draw the tube down and out of the cavity about 6 inches at a time. Listen for the blower fan to indicate strain from back-pressure in the wall. Watch for the fiberglass insulation to slow its flow rate through the blower hose at the same time. Also watch for slight bulging of the exterior siding. These signs tell the installer when to pull the tube down.

6. Carefully refasten the siding using the same holes. Use screws that are slightly longer and thicker than the original screws.

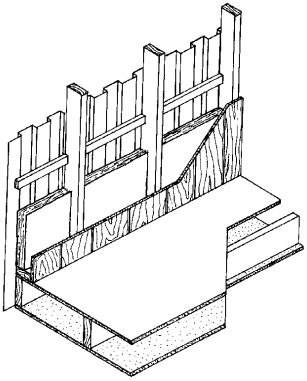

Standard mobile home construction: 2-by-4 walls and 2-by-6 floor joists are the most common construction details.

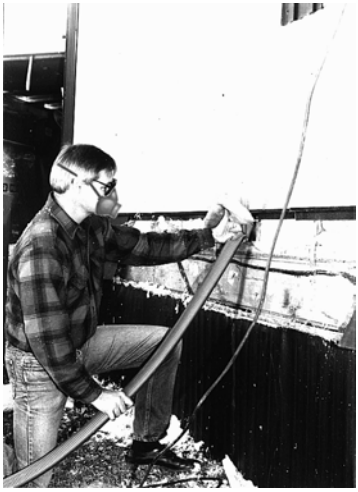

Adding insulation to mobile home walls: A contractor uses a fill tube to install more insulation in a partially filled mobile home wall.

11.2.3 Mobile Home Floor Insulation

SWS Details: 4.1302.1 Prepare Belly Floor Cavity for Insulation, 4.1303.1 Insulation of Floor Cavity with Blown Material

Mobile home floor insulation is a good energy-saving measure in cool climates. The original insulation is usually fastened to the bottom of the floor joists, leaving much of the cavity uninsulated and subject to convection currents. This greatly reduces the insulation's R-value. Blown-in belly insulation also tends to control duct leakage.

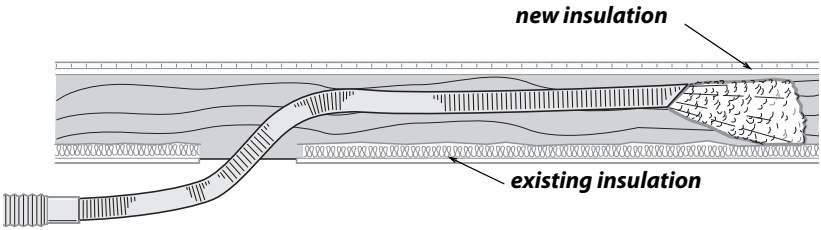

Blowing bellies: A flexible fill-tube, which is significantly stiffer than the blower hose, blows fiberglass insulation through a hole in the belly from underneath the home.

Preparing for Mobile Home Floor Insulation

Prior to installing floor insulation, always perform these repairs.

- ✓ Repair plumbing leaks.
- ✓ Tightly seal all holes in the floor.
- ✓ Inspect and seal ducts.
- ✓ Repair the rodent barrier.
- ✓ Install a ground-moisture barrier in the crawl space if the site is wet.

Patching the Belly

Mobile homes have two common types of belly covering: rigid fiber board and flexible paper or fabric. The fiberboard is normally stapled to the bottom of the floor joists. To patch a rigid belly, simply screw or staple plywood or another rigid material over the hole.

Flexible belly material may have no solid backing behind the hole or tear because the material forms a bag around the main duct, which is installed below the floor joists. In this case, use both adhesive and stitch staples to bind the flexible patch to the flexible belly material.

Patching a flexible belly: The technicians uses both adhesive and stitch staples to fasten a patch.

Blowing a floor through the belly: The contractor inserts a rigid fill tube through the belly to blow insulation into the floor cavity and underbelly.

Two methods of insulating mobile home floors are common. Blown fiberglass is recommended over cellulose for either method.

1. Drilling through the 2-by-6 rim joist and blowing fiberglass through a rigid fill tube into the belly.
2. Blowing fiberglass insulation through a flexible fill tube or a rigid fill tube into the underbelly.

First repair all holes in the belly. Use mobile home belly-paper, silicone sealant, and stitch staples. Use these same patches over the holes cut for fill-tubes. Screw wood lath over weak areas if needed.

When blowing through holes from underneath the home, consider blowing through damaged areas before patching them.

Identify any plumbing lines, and avoid installing insulation between them and the living space if freezing could be an issue. This may require running a piece of belly-paper under the pipes, and insulating the resulting cavity, to include the pipes in the heated envelope of the home.

Unfaced fiberglass batts may also be used to insulate floor sections where the insulation and belly are missing. The insulation should be supported by lath, twine, or insulation supports. This is a good approach when it isn't cost-effective to insulate the entire belly.

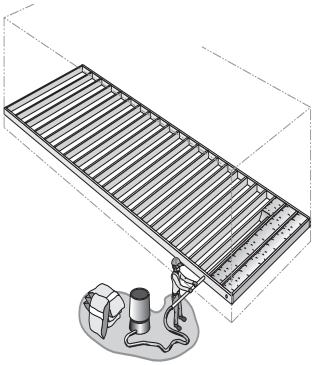

Blowing crosswise cavities: Blowing insulation into belly is easy if the floor joists run crosswise. However, the dropped belly requires more insulation than a home with lengthwise joists.

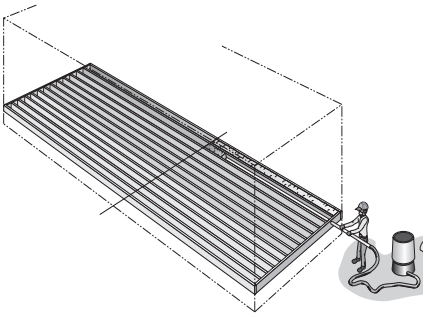

Blowing lengthwise cavities: Floors with lengthwise joists can rarely be filled completely from the ends because of the long tubing needed. The middle can be filled from underneath.

11.3 Mobile Home Windows and Doors

SWS Detail: 3.1201.5 Manufactured Housing Windows and Doors

Repairing or replacing mobile home windows and doors is often part of a mobile home weatherization job. Installing storm windows or replacing existing windows is expensive per square foot and isn't as cost-effective as insulation. However, storm windows and replacement windows are all energy conservation measures for mobile homes that are worth considering.

11.3.1 Mobile Home Storm Windows

SWS Detail: 3.1201.6 Interior Storm Windows

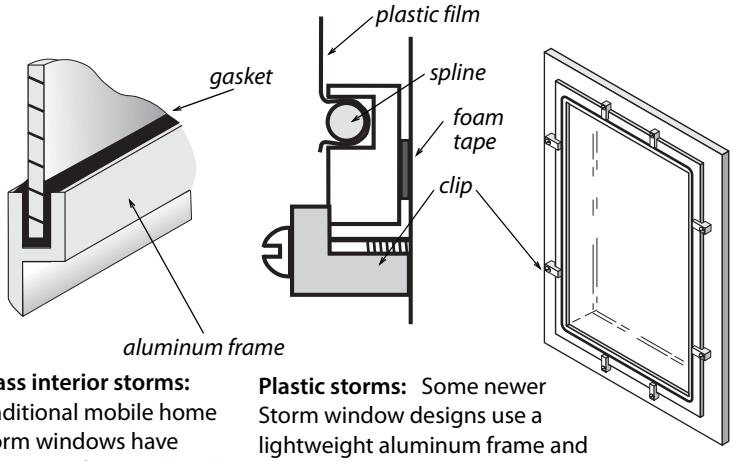

Glass interior storms: Traditional mobile home storm windows have aluminum frames glazed with glass.

Plastic storms: Some newer Storm window designs use a lightweight aluminum frame and flexible or rigid plastic glazing.

Interior storm windows are common in mobile homes. These stationary interior storms serve awning and jalousie windows. Sliding interior storm windows pair with exterior sliding prime windows.

- ✓ Interior storm windows double the R-value of a single-pane window. They also reduce infiltration, especially in the case of leaky jalousie prime windows.
- ✓ Consider repairing existing storm windows rather than replacing them unless the existing storm windows can't be re-glazed or repaired.
- ✓ When sliding primary windows are installed, use a sliding storm window that slides from the same side as the primary window. Sliding storm windows stay in place and aren't removed seasonally, and are therefore less likely to be lost or broken.

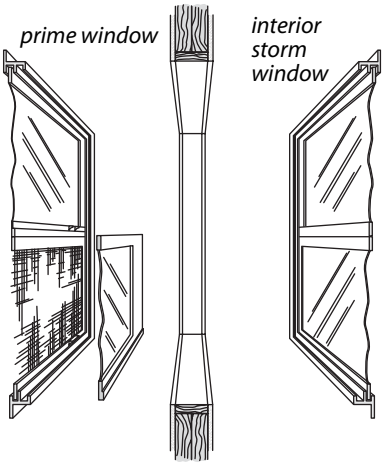

Mobile home double window: In mobile homes, the prime window is installed over the siding outdoors, and the storm window is installed indoors.

11.3.2 Replacing Mobile Home Windows

SWS Details: 3.1202.3 Replacing Damaged Window Glass in Manufactured Housing, 3.1203.3 Replacement of Manufactured Housing Windows and Doors

Replacement windows should have lower U-factors than the windows they are replacing. Inspect condition of rough opening members before replacing windows. Replace deteriorated, weak, or waterlogged framing members.

Prepare the replacement window by lining the perimeter of the inner lip with $^{1}/_{8}$-inch thick putty tape. Caulk exterior window frame perimeter to wall after installing the window.

11.3.3 Mobile Home Doors

SWS Detail: 3.1201.5 Manufactured Housing Windows and Doors

Mobile home doors come in two basic types: the mobile home door and the house-type door. Mobile home doors swing out-

wardly, and house-type doors swing inwardly. House-type doors are available with pre-hung storm doors included.

Existing or replacement mobile home doors should be air-tight, water-tight, and operable. Replace missing or damaged weather-stripping, drip cap, or flashing to ensure that water or air can't penetrate the opening. Properly adjust the door so that it closes securely, but does not crush or deform the weatherstripping.

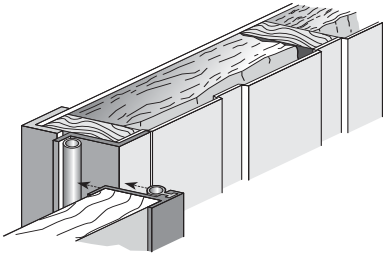

Mobile home door: Mobile home doors swing outwardly and have integral weatherstrip.

11.4 Cool Roofs for Mobile Homes

SWS Details: 5.3202.1 Reflective Coatings on Metal Roofs

Cool roof coatings reduce summer cooling costs and improve comfort by reflecting solar energy away from the home's roof and slowing the flow of heat into the home. They are shown to reduce overall cooling costs by 10-20%, and are a good choice for mobile homes or site-built homes with low slope or flat roofs. Cool roof coatings are usually bright white, and must have a reflectivity of at least 60% to meet the Energy Star or equivalent requirement for cool roof coatings.

Cool roof coatings are usually water-based acrylic elastomers, and are applied with a roller. They can be applied over most low-sloped roofing such as metal, built-up asphalt, bitumen, or single ply membranes. Some underlying materials require a primer to get proper adhesion-check the manufacturer's recommendations for asphalt-shingle roofs.

Surface preparation is critical when applying any coating. The underlying roofing materials must be clean so the coating will stick. Repairs should be performed if the existing roofing is cracked or blistered. Roof coating Won't stick to dirty or greasy surfaces, and they can't be used to repair roofs in poor conditions. Observe the following specifications when installing cool roof coatings.

- ✓ Install the coating when dry weather is predicted. Rain heavy dew, or freezing weather, if it happens within 24 hours of installation, will weaken the coating's bond to the underlying roofing.
- ✓ Protect any nearby windows, siding, or automobiles from splatters. For roller application, use a large brush for the edges, and a shaggy 1 to 1 1/2-inch roller on a 5- or 6- foot pole for the field. Run the coating up the roof jacks and other penetrations to help seal these areas. Install at least two coats, with second coat applied in the opposite direction to the first to get more complete coverage. Allow a day for drying between coats.
- ✓ Clean the roof of loose roofing material and other debris.
- ✓ Wash the roof with a water/tri-sodium phosphate (tsp) solution, or comparable mildew-cide, and scrub brush. Better yet, use a pressure washer.
- ✓ Buy the highest quality coatings, and look for those that are specifically formulated as mobile home roof coatings.
- ✓ Reinforce any open joints around skylights, pipe flashing, roof drains, wall transitions, or HVAC equipment. For build-up asphalt or bitumen roofs, repair any cracks, blisters, or de-laminations. Use polyester fabric and roof coating for these reinforcements and repairs by dipping fabric patches in the roof coating and spreading them over the existing roofing, or by laying dry fabric into a layer of wet coating. Smooth the patches down with a broad-knife

or squeegee to remove bubbles or wrinkles. Allow any repairs to cure for 1 to 2 days before applying the topcoat.

- ✓ For metal roofs, sand any rusted areas down to sound metal. Install metal patches over any areas that are rusted through, followed by polyester patches as described above.

11.5 Mobile Home Skirting

SWS Detail: 3.1488.2 Skirting Manufactured Homes

The primary purpose of skirting is to keep animals out of the crawl space. Skirting must be vented to reduce moisture accumulation in many climates, so there isn't much value in insulating it.

Installation and repair of mobile home skirting is seldom cost-effective and is not allowed in weatherization work. Locate the thermal boundary at the floor of mobile homes.

11.6 SWS Alignment

Field Guide Topic	SWS Detail
Mobile Home Air Sealing Pg. 428	3.1101 Manufactured Housing Walls
Shell Air Leakage Locations Pg. 429	3.1001.4 General Penetrations (Electrical, HVAC, Plumbing, Vent Termination, Recessed Lighting)
Duct Leak Locations Pg. 431	3.1602.11 Air Sealing System
Belly Pressure Test Pg. 432	5.3001.3 Replace Return Air Systems that Incorporate Floor Cavity (Belly) and/or Attic as the Return Air Pathway
Mobile Home Insulation Pg. 434	2.0104.1 Insulation Worker Safety

Field Guide Topic	SWS Detail
Insulating Mobile Home Roof Cavities Pg. 434	4.1003.10 Installing Fiberglass Blown Insulation for Flat, Bowed, or Vaulted Ceilings (via Interior Access Through the Ceiling), 4.1003.8 Installing Fiberglass Blown Insulation for Flat, Bowed, or Vaulted Ceilings (via Roof Side Lift), 4.1003.9 Installing Fiberglass Blown Insulation for Flat, Bowed, or Vaulted Ceilings (via Exterior Access from Top of Roof), 4.1003.11 Installing Fiberglass Blown Insulation in Roof-Over Constructions
Mobile Home Sidewall Insulation Pg. 439	4.1101.5 Exterior Wall Dense Packing, 4.1104.2 Fiberglass Blown Insulation Installation (Lifting Siding), 4.1104.3 Fiberglass Blown Insulation Installation (via Penetrations Through or Behind the Siding)
Mobile Home Floor Insulation Pg. 441	4.1302.1 Prepare Belly Floor Cavity for Insulation, 4.1303.1 Insulation of Floor Cavity with Blown Material
Mobile Home Windows and Doors Pg. 444	3.1201.5 Manufactured Housing Windows and Doors
Mobile Home Storm Windows Pg. 445	3.1201.6 Interior Storm Windows
Replacing Mobile Home Windows Pg. 446	3.1202.3 Replacing Damaged Window Glass in Manufactured Housing, 3.1203.3 Replacement of Manufactured Housing Windows and Doors

Field Guide Topic	SWS Detail
Mobile Home Doors Pg. 446	3.1201.5 Manufactured Housing Windows and Doors
Cool Roofs for Mobile Homes Pg. 447	5.3202.1 Reflective Coatings on Metal Roofs
Mobile Home Skirting Pg. 449	3.1488.2 Skirting Manufactured Homes

CHAPTER 12: AIR LEAKAGE DIAGNOSTICS

This chapter focuses on pressure-testing homes, to determine their airtightness and to guide air-sealing during weatherization. Ideally the air barrier and insulation are installed together at the building's thermal boundary. The airtightness of the air barrier has a substantial effect on the performance of the insulation. The testing described here helps to analyze the existing air barriers and decide whether and where air-sealing is needed.

12.1 SHELL AIR-LEAKAGE FUNDAMENTALS

Controlling shell air leakage is a key concern for successful weatherization. The decisions you make about sealing air leaks affect a building throughout its lifespan. Air leakage has these impacts.

- Air leakage accounts for a significant percentage of a building's heat loss.
- Air leakage through insulated assemblies reduces the R-value of insulation.
- Air leakage moves moisture in and out of the house, wetting and/or drying the building.
- Air leakage causes house pressures that can interfere with the venting of combustion appliances.

Air Leakage and Ventilation

Most homes depend on air leakage to provide outdoor air for diluting pollutants and admitting fresh air. However, air leaks can also bring pollutants into the home. Mechanical ventilation is a more reliable and efficient way to provide fresh air. See *"Whole-Building Ventilation" on page 356*.

12.1.1 Goals of Air-Leakage Testing

Air-leakage testing accomplishes a variety of purposes.

- Air-leakage and pressure testing measures the home's air-tightness level.
- It evaluates the home's ventilation requirements.
- It helps you to decide how much time and effort is required to achieve cost-effective air-leakage and duct-leakage reductions.
- It helps to compare the air-tightness of the air barriers on either side of an intermediate zone, such as an attic or crawl space. For example, comparing the airtightness of the plaster ceiling with that of the ventilated sloped roof gives the auditor an idea of how leaky the ceiling is.
- It helps decide the best place to establish the air barrier in an area that has no obvious thermal boundary such as an uninsulated crawl space.

The reason for the complexity of air-leakage testing is that there is so much uncertainty about air leakage. Testing is needed because there simply is no accurate prescriptive method for determining the severity and location of leaks, especially in complex homes. Depending on the complexity of a home, you may need to perform varying levels of testing to evaluate shell air leakage. In particular, the number of major components like stories, additions, corners, and gables indicates a home's potential for large air-leakage reductions.

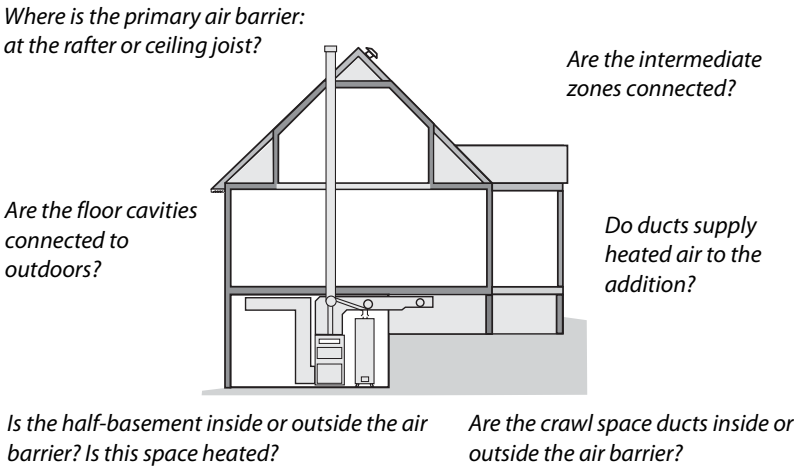

Questions to ask during an air-leakage evaluation: Your answers help determine the most efficient and cost-effective location for the air barrier.

Air-Sealing with Air-Leakage Testing

Dedicate most of your effort to seal the large air leaks that pass directly through the thermal boundary first. Chasing small leaks or leaks that connect to the outdoors through interior walls or floors isn't worth as much effort if the budget is limited.

- ✓ Perform blower door testing.
- ✓ Analyze the test results to determine if air sealing is cost-effective.
- ✓ Locate and seal the air leaks.
- ✓ During air-sealing, monitor your progress with blower door testing.
- ✓ Stop air sealing when air-sealing goals have been achieved or the budget limit has been reached.

12.2 House Airtightness Testing

House airtightness testing was made possible by the development of the blower door. The blower door measures a home's leakage rate at a standard pressure of 50 pascals. This leakage measurement can be used to compare homes with one another and to established air-leakage standards.

The blower door also allows the auditor to test parts of the home's air barrier to locate air leaks. Sometimes air leaks are obvious. More often, the leaks are hidden, and you need to find their location. This section outlines the basics of blower door measurement along with some techniques for gathering clues about the location of air leaks.

Blower Door Components

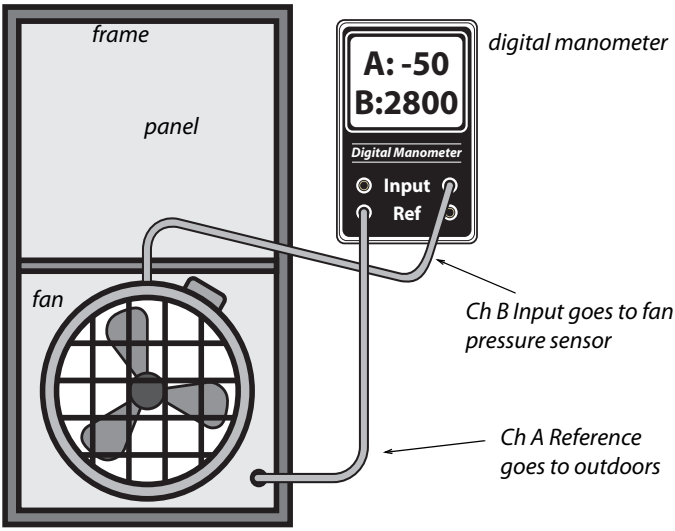

12.2.1 Blower-Door Principles

The blower door creates a 50-pascal pressure difference across the building shell and measures airflow in cubic feet per minute (CFM_{50}), in order to measure the leakiness of homes. The blower door also creates pressure differences between rooms in

the house and intermediate zones like attics and crawl spaces. These pressure differences can give clues about the location and combined size of a home's hidden air leaks.

Blower door test: Air barriers are tested during a blower-door test, with the house at a pressure of 50 pascals negative with reference to outdoors. This house has 2800 CFM_{50} of air leakage. Further diagnostic tests can help determine where that leakage is coming from.

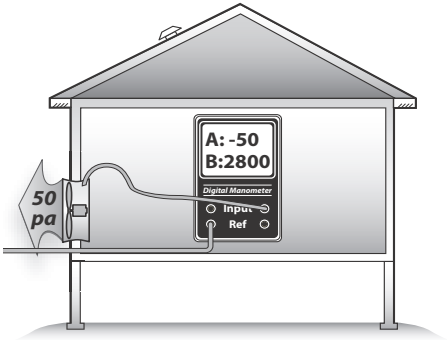

Blower-Door Terminology

Connecting the digital manometer's hoses correctly is essential for accurate testing.

This method uses the phrase *with-reference-to (WRT)*, to distinguish between the input zone and reference zone for a particular measurement. The outdoors is the most commonly used reference zone for blower door testing. The reference zone is considered to be the zero point on the pressure scale.

For example, *house WRT outdoors* = –50 pascals means that the house (input) is 50 pascals negative compared to the outdoors (reference or zero-point). This pressure reading is called the house pressure.

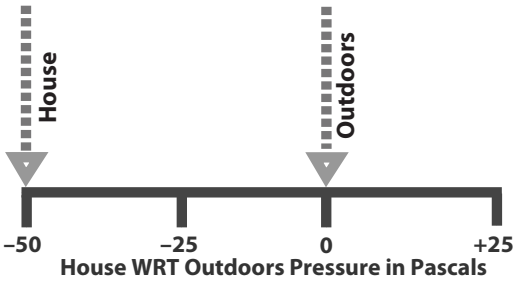

Digital manometers: Used to diagnose house and duct pressures quickly and accurately.

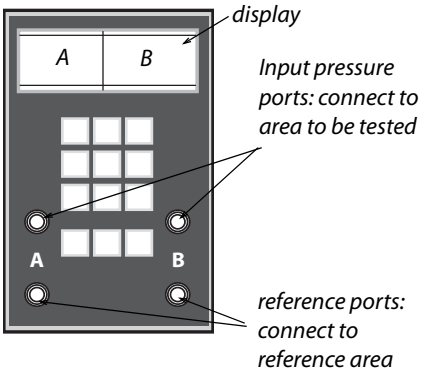

Low-Flow Rings

During the blower door test, the manometer measures airflow through the fan. This airflow (CFM_{50}) is the primary measurement of a home's airtightness and is directly proportional to the surface area of the home's air leaks. For the blower door to measure airflow accurately, the air must be flowing at an adequate speed. Tighter buildings and smaller buildings don't have enough air leakage to create an adequate airspeed to create the minimum fan pressure. This low-flow condition requires using one or two low-flow rings, to reduce the blower-door fan's opening and to increase air speed, fan pressure, and measurement accuracy.

When the air speed is too low, the DG-700 displays "LO" in the Channel B display. After installing one of the low-flow rings, follow the manufacturer's instructions for selecting the proper range or configuration on the digital manometer.

12.2.2 Preparing for a Blower Door Test

Preparing the house for a blower door test involves putting the house in its normal heating-season operation with all conditioned zones open to the blower door. Try to anticipate safety problems that the blower door test could cause, particularly with combustion appliances.

- Identify the location of the thermal boundary and determine which house zones are conditioned.
- Identify large air leaks that could prevent the blower door from achieving adequate pressure, such as a pet-door.
- Put the house into its heating-season operation with windows, doors, and vents closed and air registers open.
- Turn off combustion appliances temporarily.
- Open interior doors so that all indoor areas inside the thermal boundary are connected to the blower door. This could include the basement, conditioned kneewall areas, and closets.

Avoiding Risky Situations

Don't perform a blower door test in risky situations like the following until you remove the risk or perform an acceptable building repair.

- A wood stove is burning.
- Holes in the ceiling that could lead to dust pollution during a blower door test.
- Extremely weak building components, like a poorly installed suspended ceiling or loose wood wall paneling.
- Lead or asbestos dust is present.

12.2.3 Blower-Door Test Procedures

Follow this general procedure when performing a blower-door test.

✓ Set up the house for winter conditions with exterior doors, primary windows and storm windows closed. The door to the basement should be either open or closed, according to whether or not the basement is considered to be within the thermal boundary.

- ✓ Install blower door frame, panel, and fan in an exterior doorway with a clear path to outdoors. On windy days, install the blower door on the home's leeward side if possible. Pay attention to the blower door's location and any other conditions that may affect test results.
- ✓ Follow manufacturer's instructions for fan orientation and digital-manometer setup for either pressurization or depressurization. Depressurization is the most common orientation.
- ✓ Connect Channel A of the digital manometer to measure *house WRT outdoors*. Place the outside hose at least 5 feet away from the fan.
- ✓ Connect Channel B to measure *fan WRT zone near fan inlet*. Do not place the hose directly in front of the fan intake.
- ✓ Ensure that children, pets, and other potential interferences are at a safe distance from the fan.

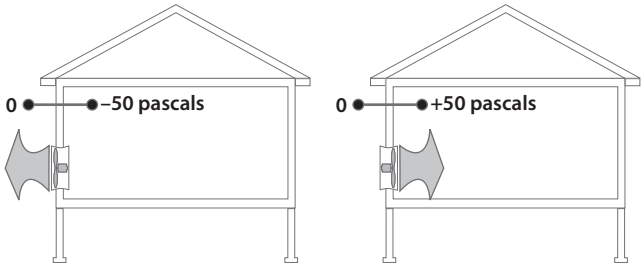

Conducting the Blower Door Test

Follow these instructions for performing a blower door test, when using a DG700 digital manometer.

1. Turn on the manometer by pushing the ON/OFF button
2. Select the MODE: PR/FL@50.
3. Select the correct DEVICE that matches the blower door you're using.

4. With the fan covered, conduct the BASELINE procedure to cancel out the background wind and stack pressures. Let the manometer average the baseline pressure for at least 30 seconds.
5. Remove the cover from the blower door fan. Complete the next two steps for tighter buildings.
6. Install the flow ring in the blower door fan which matches the expected flow rate. The fan pressure should be at least 25 Pa while measuring CFM@50.
7. Push CONFIG or Range button until you match the flow ring being used.
8. Turn on the blower door fan slowly with the controller. Increase fan speed until the building depressurization on the Channel A screen is between –45 and –55 pascals. It doesn't need to be exactly –50 pascals
9. The Channel B screen will display the single-point CFM_{50} air leakage of the building. If this number is fluctuating a lot, push the TIME AVG button to increase the averaging time period.
10. You can also use the cruise-control function to automatically control the fan speed to create and hold –50 pascals of pressure.

Blower-Door Test Follow-Up

Be sure to return the house to its original condition.

- ✓ Inspect combustion appliance pilot lights to ensure that blower door testing didn't extinguish them.
- ✓ Reset thermostats of heaters and water heaters that were turned down for testing.
- ✓ Remove any temporary plugs that were installed to increase house pressure.

- ✓ Document the location where the blower door was installed.
- ✓ Document any unusual conditions affecting the blower door test.

12.2.4 Approximate Leakage Area

There are several ways to convert blower-door CFM_{50} measurements into square inches of total leakage area. A simple and rough way to convert CFM_{50} into an approximate leakage area (ALA) is to divide CFM_{50} by 10. The ALA can help you visualize the size of openings you're looking for in a home or section of a home.

$$\textbf{ALA (SQUARE INCHES)} = \textbf{CFM}_{50} \div \textbf{10}$$

12.3 Testing Air Barriers

Leaks in air barriers cause energy and moisture problems in many homes. Air-barrier leak-testing avoids unnecessary visual inspection and unnecessary air sealing in hard-to-reach areas.

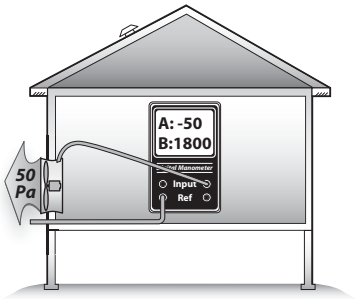

Blower door test: Air barriers are tested during a blower-door test, with the house at a pressure of 50 pascals negative with reference to outdoors. This house has 1800 CFM_{50} of air leakage. Further diagnostic tests can help determine where that leakage is coming from.

Advanced pressure tests measure pressure differences between zones in order to estimate air leakage between zones. Use these tests to make decisions about where to direct your air-sealing efforts, for example.

- Evaluate the airtightness of portions of a building's air barrier, especially floors and ceilings.
- Decide which of two possible air barriers to air seal — for example, the floor versus foundation walls.
- Determine whether building cavities like porch roofs, floor cavities, and overhangs are conduits for air leakage.
- Determine whether building cavities, intermediate zones, and ducts are connected together through air leaks.
- Estimate the air leakage in CFM_{50} through a particular air barrier, for the purpose of estimating the effort and cost necessary to seal the leaks.

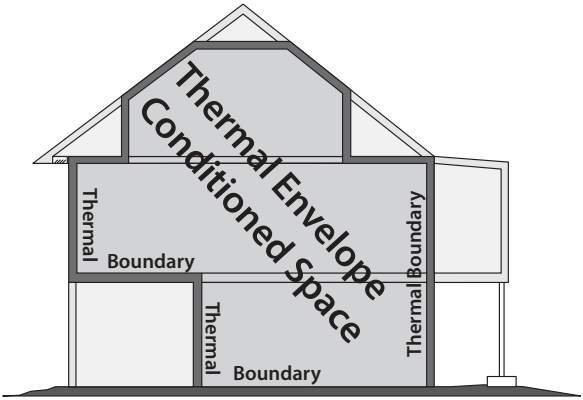

Air-Barrier Test Results

Air-barrier tests provide a range of information from simple clues about which parts of a building leak the most, to specific estimates of the airflow and hole size through a particular air barrier.

The next table shows examples of how common building materials perform as air barriers. This information is helpful in interpreting blower door tests and selecting air-sealing materials.

Table 12-1: Building Components and Their Air Permeance

Good air barriers: <2 CFM_{50} per 100 sq. ft.	Poor air barriers: 10–1000 CFM_{50} per 100 sq. ft.
5/8″ oriented strand board	5/8″ tongue-and-groove wood sheeting
1/2″ drywall	6" fiberglass batt
4-mil air barrier paper	1.5" wet-spray cellulose
Asphalt shingles and perforated felt over 1/2″ plywood	wood siding over plank sheathing
1/8″ tempered hardboard	wood shingles over plank sheathing
painted un-cracked lath and plaster	blown fibrous insulation

Measurements taken at 50 pascals pressure.
Based on information from: "Air Permeance of Building Materials" by Canada Mortgage Housing Corporation, and estimates of comparable assemblies by the author.
Although cellulose reduces air leakage when blown into walls, it isn't considered an air-barrier material.

12.3.1 Primary Versus Secondary Air Barriers

A home's air barrier should be a material that is continuous, sealed at the seams, and impermeable to airflow. Where there are two possible air barriers, in an attic for example, the most airtight barrier is the primary air barrier and the least airtight is the secondary air barrier.

The primary air barrier should be adjacent to the insulation to ensure the insulation's effectiveness. We use pressure-diagnostic testing to verify that the insulation and the primary air barrier are together. Sometimes we're surprised during testing to find that our assumed primary air barrier is actually secondary, and the secondary air barrier is primary.

Intermediate zones are unconditioned spaces that are sheltered within the exterior shell of the house. Intermediate zones can be located inside or outside the home's primary air barrier. Intermediate zones include: unheated basements, crawl spaces, attics, enclosed porches, and attached garages.

Intermediate zones have two potential air barriers: one between the zone and house and one between the zone and outdoors. For example, an attic or roof space has two air barriers: the ceiling and roof. You should know which air barrier is the tightest.

12.3.2 Simple Pressure Tests

Blower door tests give us valuable information about the relative leakiness of rooms or sections of the home. Listed below are five simple methods.

1. *Feeling zone air leakage:* Close an interior door partially so that there is a one-inch gap between the door and door jamb. Feel the airflow along the length of that crack, and compare that airflow intensity with airflow from other rooms, using this same technique.
2. *Observing the ceiling/attic floor:* Pressurize the home and observe the top-floor ceiling from the attic with a good flashlight. Air leaks will show in movement of loose-fill insulation, blowing dust, moving cobwebs, etc. You can also use a small piece of tissue paper to disclose air movement.
3. *Observing smoke movement:* Pressurize the home and observe the movement of smoke through the house and out of its air leaks.
4. *Room pressure difference:* Check the pressure difference between a closed room or zone and the main body of a home. Larger pressure differences indicate larger potential air leakage within the closed room or else a tight air barrier between the room and main body. A small pressure difference means little leakage to the

outdoors through the room or a leaky air barrier between the house and room.

5. *Room airflow difference:* Measure the house CFM_{50} with all interior doors open. Close the door to a single room, and note the difference in the CFM_{50} reading. The difference is the approximate leakage through that room's air barrier.

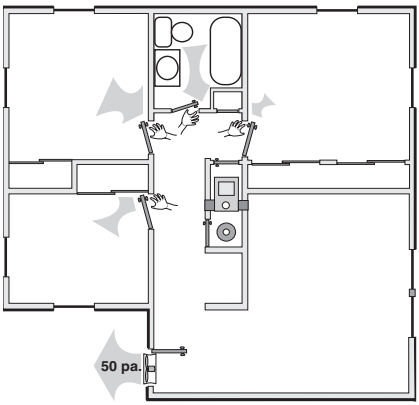

Interior door test: Feeling airflow with your hand at the crack of an interior door gives a rough indication of the air leakage coming from the outdoors through that room.

Tests 1, 2, and 3 present good customer education opportunities. Feeling airflow or observing smoke are simple observations, but have helped identify many air leaks that could otherwise have remained hidden.

When airflow within the home is restricted by closing a door, as in tests 4 and 5, it may take alternative indoor paths that render these tests somewhat misleading. Only practice and experience can guide your decisions about the applicability and usefulness of these general indicators.

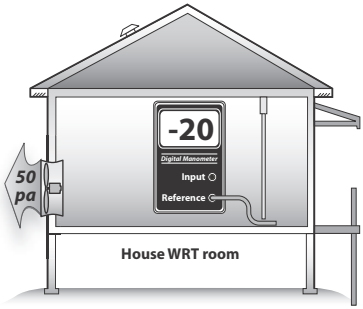

Bedroom test: This bedroom pressure difference may be caused by its leaky exterior walls or tight interior walls, separating it from the main body of the home. This test can determine whether or not a confined combustion zone is connected to other rooms.

12.3.3 Simple Zone Pressure Testing

Manometers aren't limited to finding indoor WRT outdoor differences. They can also measure pressure differences between the house and its intermediate zones during blower-door tests. The purpose of these tests is to evaluate the air-tightness of the home's interior air barriers.

The blower door, when used to create a house-to-outdoors pressure of –50 pascals, also creates house-to-zone pressures of between 0 and –50 pascals in the home's intermediate zones. The amount of depressurization depends on the relative leakiness of the zone's two air barriers.

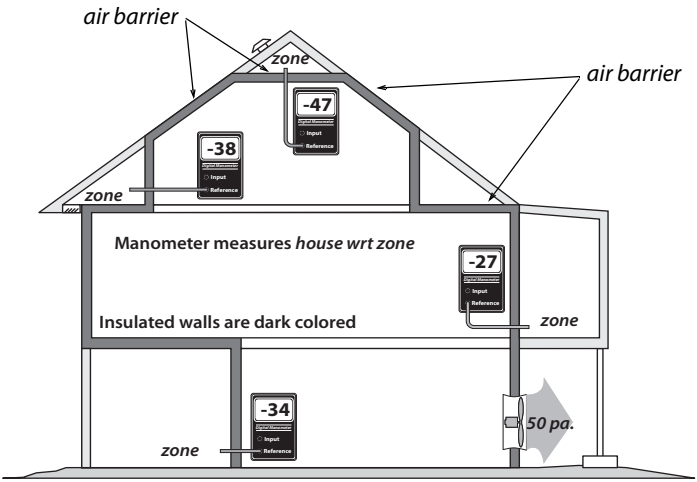

Pressure-testing building zones: Measuring the pressure difference across the assumed thermal boundary (*house wrt zone*) tells you whether the air barrier and insulation are aligned. If the manometer reads close to –50 pascals, the air barrier and insulation are aligned and the tested zones are well-connected to outdoors.

For example, in an attic with a fairly airtight ceiling and a well-ventilated roof, the attic will indicate that it is mostly outdoors by having a house-to-zone pressure of –45 to –50 pascals. The leakier the ceiling and the tighter the roof, the smaller that the negative house-to-zone pressure will be. This holds true for other intermediate zones like crawl spaces, attached garages, and unheated basements.

Zone Leak-Testing Methodology

Depressurize house to –50 pascals with a blower door.

1. Find an existing hole, or drill a hole through the floor, wall, or ceiling between the conditioned space and the intermediate zone.
2. Connect the reference port of a digital manometer to a hose reaching into the zone.
3. Leave the input port of the digital manometer open to the indoors.

4. Read the negative pressure given by the manometer. This is the house-to-zone pressure, which will be –50 pascals if the air barrier between house and zone is air-tight and the zone itself is well-connected to outdoors.
5. If the reading is significantly less negative than –45 pascals, find the air barrier's largest leaks and seal them.
6. Repeat steps 1 through 5, performing more air-sealing as necessary, until the pressure is as close to –50 pascals as possible.

Interpreting house-to-zone pressure: The greater the negative number the better the air barrier is performing.

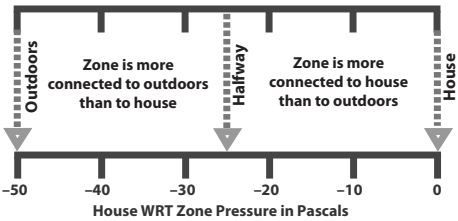

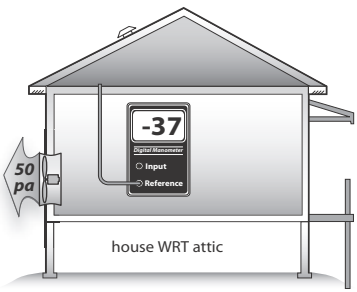

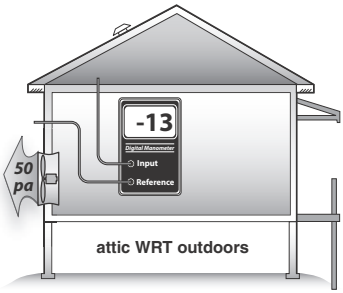

House-to-attic pressure: This commonly used measurement is convenient because it requires only one hose.

Attic-to-outdoors pressure: This measurement confirms the first because the two add up to –50 pascals.

Leak-Testing Building Cavities

Building cavities such as wall cavities, floor cavities between stories, and dropped soffits in kitchens and bathrooms can also be

tested as described above to determine their connection to the outdoors as shown here.

These examples assume that the manometer is outdoors with the reference port open to outdoors

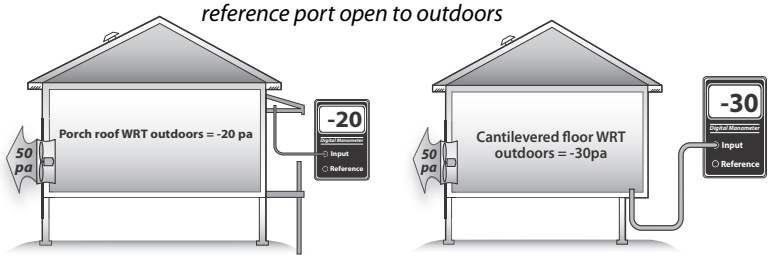

Porch roof test: If the porch roof were outdoors, the manometer would read near 0 pascals. We hope that the porch roof is outdoors because it is outside the insulation. We find, however, that it is partially indoors, indicating that it may harbor significant air leaks through the thermal boundary.

Cantilevered floor test: We hope to find the cantilevered floor to be indoors. A reading of –50 pascals would indicate that it is completely indoors. A reading less negative than –50 pascals is measured here, indicating that the floor cavity is partially connected to outdoors.

Testing Zone Connectedness

Sometimes it's useful to determine whether two zones are connected by a large air leak. Measuring the house-to-zone pressure during a blower door test, before and then after opening the other zone to the outdoors, can establish whether the two zones are connected by a large air leak. You can also open an interior door to one of the zones and check for pressure changes in the other zone.

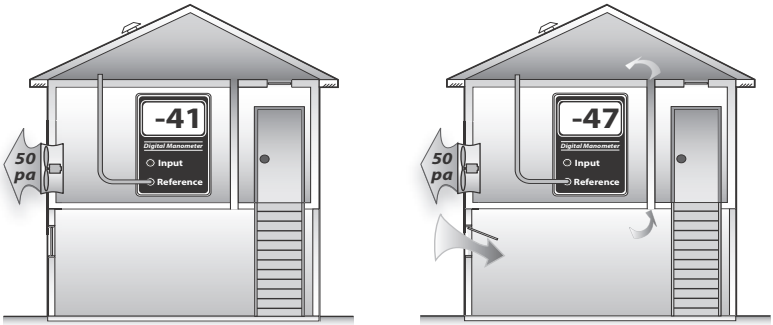

Zone connectedness: The attic measures closer to outdoors after the basement window is opened, indicating that the attic and basement are connected by a large bypass.

Leak-Testing Building Cavities

You can also test building cavities such as wall cavities, floor cavities between stories, and dropped soffits in kitchens and bathrooms with a digital manometer to evaluate their possible connection to the outdoors by way of air leaks.

12.3.4 Locating the Thermal Boundary

When retrofitting, you need to decide where to air-seal and where to insulate. Zone pressures are one of several factors used to determine where the thermal boundary should be.

For zone leak-testing, the house-to-zone pressure is often used to determine which of two air barriers is tighter.

- Readings of negative 25-to-50 pascals house-to-attic pressure mean that the ceiling is tighter than the roof. If the roof is almost completely airtight, achieving a 50-pascal house-to-attic pressure difference may be difficult. However if the roof is well-ventilated, achieving a near-50-pascal difference should be possible.
- Readings of negative 0-to-25 pascals house-to-attic pressure mean that the roof is tighter than the ceiling. If the

roof is well-ventilated, the ceiling has even more leakage area than the roof's vent area.

- Readings around –25 pascals house-to-attic pressure indicate that the roof and ceiling are equally airtight or leaky.

Pressure readings more negative than –45 pascals indicate that the ceiling (typical primary air barrier) is adequately airtight. Less negative pressure readings indicate that air leaks should be located and sealed.

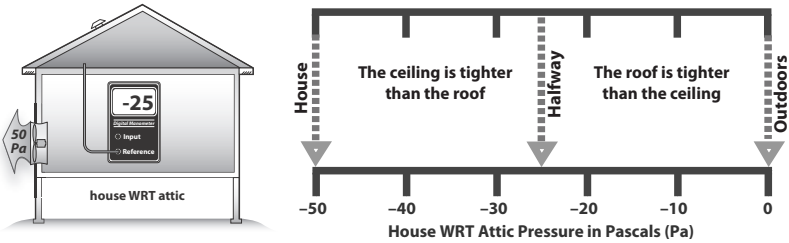

Floor Versus Crawl Space

The floor shown here is tighter than the crawl-space foundation walls. If the crawl-space foundation walls are insulated, holes and vents in the foundation wall should be sealed until the pressure difference between the crawl space and outside is as negative you can make it — ideally more negative than –45 pascals. A leaky foundation wall renders its insulation nearly worthless.

If the floor above the crawl space were insulated instead of the foundation walls in the above example, the air barrier and the insulation would be aligned.

If a floor is already insulated, it makes sense to establish the air barrier there. If the foundation wall is more airtight than the floor, that would be one reason to insulate the foundation wall.

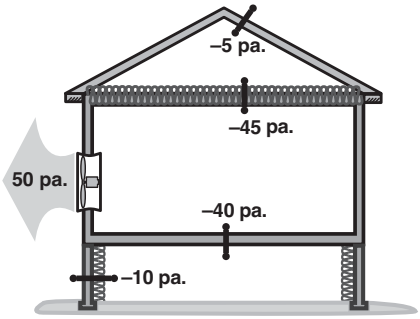

Pressure measurements and air-barrier location: The air barrier and insulation are aligned at the ceiling. The crawl-space pressure measurements show that the floor is the air barrier and the insulation is misaligned — installed at the foundation wall. We could decide to close the crawl space vents and air-seal the crawl space. Then the insulation would be aligned with the air barrier.

Attic Boundary

Generally, the thermal boundary (air barrier and insulation) should be between the conditioned space and attic. An exception would be insulating the roof to enclose an attic air handler and its ducts within the thermal boundary.

Garage Boundary

The air barrier should always be between the conditioned space and a tuck-under or attached garage, to separate the living spaces from this unconditioned and often polluted zone.

Duct Location

The location of ducts either within or outside the thermal boundary is an important factor in determining the cost-effectiveness of duct-sealing and insulation. Including the heating ducts within the thermal boundary is preferred because it reduces energy waste from both duct leakage and duct heat transmission.

12.4 SWS Alignment

Field Guide Topic	SWS Detail
Shell Air-Leakage Fundamentals Pg. 453	
Goals of Air-Leakage Testing Pg. 454	
House Airtightness Testing Pg. 456	
Blower-Door Principles Pg. 456	
Preparing for a Blower Door Test Pg. 458	
Blower-Door Test Procedures Pg. 459	
Approximate Leakage Area Pg. 462	
Testing Air Barriers Pg. 462	
Primary Versus Secondary Air Barriers Pg. 464	
Simple Pressure Tests Pg. 465	
Simple Zone Pressure Testing Pg. 467	
Locating the Thermal Boundary Pg. 471	

APPENDICES

A–1 R-VALUES FOR COMMON MATERIALS

Material	R-value
Fiberglass or rock wool batts and blown 1″	2.8–4.0
Blown cellulose 1″	3.0–4.0
Vermiculite loose fill 1″	2.7
Perlite 1″	2.4
White expanded polystyrene foam (beadboard) 1″	3.9–4.3
Polyurethane/polyisocyanurate foam 1″	6.2–7.0
Extruded polystyrene 1″	5.0
High-density 2-part polyurethane foam 1″	5.8–6.6
Low-density 2-part polyurethane foam 1″	3.6
Oriented strand board (OSB) or plywood $^{1}/_{2}$″	1.6
Concrete or stucco 1″	0.1
Wood 1″	1.0
Carpet/pad $^{1}/_{2}$″	2.0
Wood siding $^{3}/_{8}$–$^{3}/_{4}$″	0.6–1.0
Concrete block 8″	1.1
Asphalt shingles	0.44
Fired clay bricks 1″	0.1–0.4
Gypsum or plasterboard $^{1}/_{2}$″	0.4
Single pane glass $^{1}/_{8}$″	0.9
Low-e insulated glass (Varies according to Solar Heat Gain Coefficient (SHGC) rating.)	3.3–4.2

A–2 ASHRAE 62.2 Example Calculation

Example of Local Ventilation Deficit Calculation

Example: The kitchen of a home has a small range hood providing 30 CFM and a window for an additional 20 CFM. The main bathroom has a fan providing around 30 CFM and no opening window. The second bath has an opening window but no fan. Follow the steps below to find the necessary additional airflow.

How to Find the Local Ventilation Deficit: 5 Steps

1. **Kitchen Deficit: 100 CFM – (30 + 20) CFM = 50 CFM**
2. **Bathroom 1 Deficit: 50 CFM – 30 CFM = 20 CFM**
3. **Bathroom 2 Deficit: 50 CFM – 20 CFM = 30 CFM**
4. **Total Deficit: 50 CFM + 20 CFM + 30 CFM = 100 CFM**
5. **Added CFM Needed (I_{def}): 100 CFM ÷ 4 = <u>25 CFM</u>**

A–3 ASHRAE 62.2 Duct Sizing

	Rated Fan CFM							
	50	**80**	**100**	**125**	**150**	**200**	**250**	**300**
Duct Dia.	**Smooth Hard Duct - Maximum Duct Length in Feet**							
3″	5	X	X	X	X	X	X	X
4″	114	31	10	X	X	X	X	X
5″	NL	152	91	51	28	X	X	X
6″	NL	NL	NL	168	112	53	25	9
7″	NL	NL	NL	NL	NL	148	88	54
8″	NL	NL	NL	NL	NL	NL	198	133
Duct Dia.	**HVAC Flex Duct - Maximum Duct Length in Feet**							
3″	X	X	X	X	X	X	X	X
4″	56	4	X	X	X	X	X	X
5″	NL	81	42	16	2	X	X	X
6″	NL	NL	158	91	55	18	1	X
7″	NL	NL	NL	NL	161	78	40	19
8″	NL	NL	NL	NL	NL	189	111	69

NL: No limit;
X: not allowed
Table assumes no elbows. Deduct 15 ft from allowable duct length for each elbow.

A–4 Fire Testing and Rating

Test/Rating	Description
ASTM E-136	If a material passes this test, it is non-combustible.
ASTM E-119	Hourly rating of a wall when exposed to fire. Determines how long that the wall holds back heat and flames.
ASTM E-184	Hourly rating for a sealant system for a penetration through a fire-rated (ASTM E119) assembly.
ASTM E-84	Test measures how fast flames spread in a fire tunnel lined with the tested material, compared to red oak, which is given a flame spread of 100. **This test classifies materials as Class I, II, or III (or A, B, & C) See flame spread in the three rows below.**
Class I or A	Flame spread less than or equal to 25
Class II or B	Flame spread 26 to 75
Class III or C	Flame spread 76 to 200
UL181	Duct materials, duct-closure systems, and duct sealants so labeled pass UL fire-resistance tests.

A–5 SWS Maximum CAZ Depressurization

Appliance Type	Max. Depress.
Atmospheric water heater only (Category I, natural draft), open-combustion appliances	–2 pa
Atmospheric water heater (Category I, natural draft) and atmospheric furnace (Category I, natural draft), common-vented, open-combustion appliances	–3 pa
Gas furnace or boiler, Category I or Category I fan-assisted, open-combustion appliances	–5 pa
Oil or gas unit with power burner, low- or high-static pressure burner, open combustion appliances	–5 pa
Wood-burning appliances	–7 pa
Open-combustion furnaces or boilers with fan-powered horizontal venting	–15 pa
Pellet stove with draft fan and sealed vent	–15 pa
Direct-vent, sealed combustion appliances with forced draft	–25 pa

SWS Detail: 2.0299.1 Combustion Appliance Depressurization Limits Table

A–6 Gas Furnace Output Table

CFM	Temperature Rise (Supply F° – Return F°)					
	30	40	50	60	70	80
600	19.4	25.9	32.4	38.9	45.4	51.8
700	22.7	30.2	37.8	45.4	52.9	60.5
800	25.9	34.6	43.2	51.8	60.4	69.1
900	29.2	38.9	48.6	58.3	68.0	77.8
1000	32.4	43.2	54.0	64.8	75.6	86.4
1100	35.6	47.5	59.4	71.3	83.2	95.0
1200	38.9	51.8	64.8	77.8	90.7	103.7
1300	42.1	56.2	70.2	84.2	98.3	112.3
1400	45.4	60.5	75.6	90.7	105.8	121.0
1500	48.6	64.8	81.0	97.2	113.4	129.6

A–7 BPI CO &Draft Decision Table

CO Level		Draft and Spillage	Required Action
0 – 25 ppm	and	Passes	Proceed with work.
26 –100 ppm	and	Passes	Recommend that the CO problem be fixed.
26 –100 ppm	and	Fails at worst-case only	Recommend a service call for the appliance and/or repairs to the home to correct the problem.
100 –400 ppm	or	Fails under normal conditions	**Stop Work:** Work may not proceed until the system is serviced and the problem is corrected.
>400 ppm	and	Passes	**Stop Work:** Work may not proceed until the system is serviced and the problem is corrected.
>400 ppm	and	Fails under any conditions	**Emergency:** Shut off the fuel to the appliance and ask the homeowner to call for service immediately.

Building Performance Institute Inc.: Energy Analyst Standard

A-8 Refrigerator Dating Chart

Refrigerators are listed by brand name, followed by the coding system. If several manufacturers used the same system, they are listed together. Some rules of thumb for easy identification are: (1) Refrigerators that are any color of green, brown, yellow, pink, or blue (actually KitchenAid makes a new unit in cobalt blue); have mechanical handles; have doors held shut with magnetic strips; have rounded shoulders; have a chromed handle; or have exposed "house door" type hinges are at least 10 years old, and (2) the following brands have only been manufactured since around 1984 - Roper, Estate, KitchenAid, Caloric, Modern Maid, and Maytag.

Brand(s)	What to look for	What to avoid	How to decode	Example
Montgomery Wards, Signature (2000)	Serial # - 1st two digits	n/a	Reverse the digits	56xxxxx = 1965
Sears, Kenmore, Coldspot	Model # - 1st & 3rd digits after (.)	n/a	Combine the digits	xx.6x2xxx = 1962
Whirlpool	Model # - 1st 3 letters (pre 1982) Serial # - 2nd digit (post 1982)	Serials with letters	No need as 1st two digits Add "198." to it	ABCxxx = pre 1982 x2xxx = 1982
Amana	Serial # - 1st digit (pre 1986)	n/a	BLACKHORSE B=1, L=2	Hxxxx = 1966 or 1976 61 is the oldest
Frigidaire	Serial # - 1st & 4th digit (pre 1989)	Serials with no letter in the 4th space	Add "196, 197, or 198" to the 1st digit. The letter in the 4th space is a month code used only on older models.	3xxBxx = 1973 or 1983
Gibson, Kelvinator	Serial # - 3rd digit (pre 1989)	n/a	Add "196, 197, or 198" to it	xx3xx = 1963 or 73 or 83
White, Westinghouse	Serial # - 2nd letter (pre 1989)	Serials without letters	A,V,W=78, B=79, C=80 etc. pre-1978, R=74, U=77 etc.	xLxxx = 1988 74 is the oldest year
Tappan, O'Keefe & Merritt	Serial # - 7th digit (pre 1989)	n/a	Add "196, 197, or 198" to it	xx xxx-x8xx = 1968 or 78 or 88
Admiral, Crosley, Norge, Magic Chef, Jenn Air	Serial # - last letter	n/a	A=1950 or 1974 (+14 yrs) B=1951 or 1975, etc.	xxxxxxD= 1953 or 1977
General Electric (GE)	Serial # - 2nd letter	n/a	See chart below	xGxxx = 1950 or 1980
Hotpoint	Same as GE with some exceptions. See GE and Hotpoint exceptions chart below			

GE Decoder Chart:							
	A = 44, 65, 77, 89	B = 45, 66	C = 46, 67	D = 47, 68, 78, 90	E = 48, 69	F = 49, 79, 91	G = 50, 80, 92
	H = 51, 81, 93	J = 52	K = 53	L = 54, 70, 82, 94	M = 55, 71, 83	N = 56, 72	P = 57, 73
	R = 58, 84	S = 59, 85	T = 60, 74, 86	V = 61, 75, 87	W = 62	X = 63 Y = 64	Z = 76, 88

Hotpoint Exceptions: U = 61, V = 62, W = 63, X = 64, Y = 65, Z = 66, A = 67, B = 68

Revised 5/6/94

A–9 DOE HEALTH AND SAFETY GUIDANCE

Health and Safety Issue	Action/Allowability	Testing	Client Education	Training
Air Conditioning and Heating Systems	"Red tagged", inoperable, or nonexistent heating system replacement, repair, or installation is allowed where climate conditions warrant, unless prevented by other guidance herein. Air conditioning system replacement, repair, or installation is allowed in homes of at-risk occupants where climate conditions warrant.	Make sure systems are present, operable, and performing. Determine presence of at-risk occupants.	Discuss and provide information on appropriate use and maintenance of units and proper disposal of bulk fuel tanks when not removed.	Awareness of guidance.
Appliances and Water Heaters	Replacement of water heaters is allowed on a case by case basis. Replacement and installation of other appliances are not allowable health and safety costs. Repair and cleaning are allowed. Also see Air Conditioning and Heating Systems and Combustion Gases.	Determine whether appliances/water heaters are performing safely. Combustion safety testing is required when combustion appliances are present.	Discuss and provide information on appropriate use, maintenance, and disposal of appliances/water heaters.	Awareness of guidance. Conducting diagnostic training.
Asbestos - in siding, walls, ceilings, etc	Removal of siding is allowed to perform energy conservation measures. All precautions must be taken not to damage siding. Asbestos siding should never be cut or drilled. Recommended, where possible, to insulate through home interior.	Inspect exterior wall surface and subsurface for asbestos siding prior to drilling or cutting.	Inform the client that suspected asbestos siding is present and how precautions will be taken.	Safe practices for siding removal and replacement. How to identify asbestos containing materials.
Asbestos - in vermiculite	When vermiculite is present, unless testing determines otherwise, take precautionary measures as if it contains asbestos, such as not using blower door tests and utilizing personal air monitoring while in attics. Where blower door tests are performed, it is a best practice to perform pressurization instead of depressurization. Encapsulation by an appropriately trained asbestos control professional is allowed. Removal is not allowed.	Assess whether vermiculite is present. Asbestos Hazard Emergency Response Act of 1986 (AHERA) certified prescriptive sampling is allowed by a certified tester.	Clients should be instructed not to disturb suspected asbestos containing material. Provide asbestos safety information to the client. Formally notify client if test results are positive for asbestos and signed by the client.	Audit training on how to recognize vermiculite. AHERA course for testing. AHERA or other appropriately trained or certified asbestos control professional training for encapsulation.
Asbestos - on pipes, furnaces, other small covered surfaces	Assume asbestos is present in covering materials. Encapsulation is allowed by an AHERA asbestos control professional and should be conducted prior to blower door testing. Removal may be allowed by an AHERA asbestos control professional on a case by case basis.	AHERA testing is allowed by a certified tester.	Clients should be instructed not to disturb suspected asbestos containing material. Provide asbestos safety information to the client.	AHERA course for testing and asbestos control professional training for abatement. How to identify asbestos containing materials.

Health and Safety Issue	Action/Allowability	Testing	Client Education	Training
Biologicals and Unsanitary Conditions - odors, mustiness, bacteria, viruses, raw sewage, rotting wood, etc.	Remediation of conditions that may lead to or promote biological concerns and unsanitary conditions is allowed. Addressing bacteria and viruses is not an allowable cost. Deferral may be necessary in cases where a known agent is present in the home that may create a serious risk to occupants or weatherization workers. Also see Mold and Moisture guidance below.	Sensory inspection.	Inform client of observed conditions. Provide information on how to maintain a sanitary home and steps to correct deferral conditions.	How to recognize conditions and when to defer. Worker safety when coming in contact these conditions.
Building Structure and Roofing	Building rehabilitation is beyond the scope of the Weatherization Assistance Program. Homes with conditions that require more than incidental repair should be deferred. See Mold and Moisture guidance below.	Visual inspection. Ensure that access to areas necessary for weatherization is safe for entry and performance of assessment, work, and inspection.	Notify client of structurally compromised areas.	How to identify structural and roofing issues.
Code Compliance	Correction of preexisting code compliance issues is not an allowable cost other than where weatherization measures are being conducted. State and local (or jurisdiction having authority) codes must be followed while installing weatherization measures. Condemned properties and properties where "red tagged" health and safety conditions exist that cannot be corrected under this guidance should be deferred.	Visual inspection. Local code enforcement inspections.	Inform client of observed code compliance issues.	How to determine what code compliance may be required.
Combustion Gases	Proper venting to the outside for combustion appliances, including gas dryers is required. Correction of venting is allowed when testing indicates a problem.	Combustion safety testing is required when combustion appliances are present. Inspect venting of combustion appliances and confirm adequate clearances. Test naturally drafting appliances for draft and spillage under worst case conditions before and after air tightening. Inspect cooking burners for operability and flame quality.	Provide client with combustion safety and hazards information, including the importance of using exhaust ventilation when cooking and the importance of keeping burners clean to limit the production of CO.	How to perform appropriate testing, determine when a building is excessively depressurized, and the difference between air free and as-measured.

DOE Health & Safety Guidance 3

Health and Safety Issue	Action/Allowability	Testing	Client Education	Training
Drainage - gutters, down spouts, extensions, flashing, sump pumps, landscape, etc.	Major drainage issues are beyond the scope of the Weatherization Assistance Program. Homes with conditions that may create a serious health concern that require more than incidental repair should be deferred. See Mold and Moisture guidance below.	Visual inspection.	Importance of cleaning and maintaining drainage systems. Information on proper landscape design.	How to recognize drainage issues.
Electrical, other than Knob-and-Tube Wiring	Minor electrical repairs are allowed where health or safety of the occupant is at risk. Upgrades and repairs are allowed when necessary to perform specific weatherization measures.	Visual inspection. Voltage drop and voltage detection testing are allowed.	Provide information on overloading circuits, electrical safety/risks.	How to identify electrical hazards. Local code compliance.
Electrical, Knob-and-Tube Wiring	Minor upgrades and repairs necessary for weatherization measures and where the health or safety of the occupant is at risk are allowed. Must provide sufficient over-current protection prior to insulating over knob-and-tube wiring.	Inspect for presence and condition of knob-and-tube wiring. Check for alterations that may create an electrical hazard. Voltage drop and voltage detection testing are allowed.	Provide information to client on over-current protection, overloading circuits, basic electrical safety/risks.	How to identify electrical hazards. Local code compliance.
Fire Hazards	Correction of fire hazards is allowed when necessary to safely perform weatherization.	Check for fire hazards in the home during the audit and while performing weatherization.	Inform client of observed hazards.	How to identify fire hazards.
Formaldehyde, Volatile Organic Compounds (VOCs), and other Air Pollutants	Removal of pollutants is allowed and is required if they pose a risk to workers. If pollutants pose a risk to workers and removal cannot be performed or is not allowed by the client, the unit must be deferred.	Sensory inspection.	Inform client of observed condition and associated risks. Provide client written materials on safety and proper disposal of household pollutants.	How to recognize potential hazards and when removal is necessary.
Injury Prevention of Occupants and Weatherization Workers - Measures such as repairing stairs and replacing handrails.	Workers must take all reasonable precautions against performing work on homes that will subject workers or occupants to health and safety risks. Minor repairs and installation may be conducted only when necessary to effectively weatherize the home; otherwise these measures are not allowed.	Observe if dangers are present that would prevent weatherization.	Inform client of observed hazards and associated risks.	Awareness of potential hazards.

Health and Safety Issue	Action/Allowability	Testing	Client Education	Training
Lead Based Paint	Follow EPA's Lead; Renovation, Repair and Painting Program (RRP). In addition to RRP, Weatherization requires all weatherization crews working in pre-1978 housing to be trained in Lead Safe Weatherization (LSW). Deferral is required when the extent and condition of lead-based paint in the house would potentially create further health and safety hazards.	Testing is allowed. Job site set up and cleaning verification is required by a Certified Renovator.	Follow RRP requirements.	All weatherization crews working on pre-1978 homes must receive LSW training and be accompanied by an EPA Certified Renovator. Grantee Monitors/Inspectors must be Certified Renovators and receive LSW training.
Mold and Moisture	Limited water damage repairs that can be addressed by weatherization workers and correction of moisture and mold creating conditions are allowed when necessary in order to weatherize the home and to ensure the long term stability and durability of the measures. Where severe Mold and Moisture issues cannot be addressed, deferral is required.	Visual assessment is required and diagnostics such as moisture meters are recommended pre and prior to final inspection. Mold testing is not an allowable cost.	Provide client notification and disclaimer on mold and moisture awareness.	National curriculum on mold and moisture or equivalent.
Occupant Preexisting or Potential Health Conditions	When a person's health may be at risk and/or the work activities could constitute a health or safety hazard, the occupant at risk will be required to take appropriate action based on severity of risk. Temporary relocation of at-risk occupants may be allowed on a case by case basis. Failure or the inability to take appropriate actions must result in deferral.	Require occupant to reveal known or suspected health concerns as part of initial application for weatherization. Screen occupants again during audit.	Provide client information of any known risks. Provide worker contact information so client can inform of any issues.	How to assess occupant preexisting conditions and determining what action to take if the home is not deferred. Awareness of potential hazards.
Occupational Safety and Health Administration (OSHA) and Crew Safety	Workers must follow OSHA standards and Material Safety Data Sheets (MSDS) and take precautions to ensure the health and safety of themselves and other workers. MSDS must be posted wherever workers may be exposed to hazardous materials.	Grantees must perform assessments to determine if crews are utilizing safe work practices.	Not applicable.	Use and importance of personal protection equipment. OSHA 10 hour training is required for all workers. OSHA 30 hour training is required for crew leaders.

DOE Health & Safety Guidance 5

Health and Safety Issue	Action/Allowability	Testing	Client Education	Training
Pests	Pest removal is allowed only where infestation would prevent weatherization. Infestation of pests may be cause for deferral where it cannot be reasonably removed or poses health and safety concern for workers. Screening of windows and points of access is allowed to prevent intrusion.	Assessment of presence and degree of infestation and risk to worker.	Inform client of observed condition and associated risks.	How to assess presence and degree of infestation, associated risks, and need for deferral.
Radon	Whenever site conditions permit, exposed dirt must be covered with a vapor barrier except for mobile homes. In homes where radon may be present, precautions should be taken to reduce the likeliness of making radon issues worse.	Testing may be allowed in locations with high radon potential.	Provide client with EPA consumer's guide to radon.	What is it, how it occurs. What factors may make radon worse. Weatherization measures that may be helpful. Vapor barrier installation.
Refrigerant	Reclaim refrigerant per Clean Air Act 1990, section 608, as amended by 40 CFR82, 5/14/93.	EPA testing protocols.	Clients should not disturb refrigerant.	EPA-approved section 608 type I or universal certification.
Smoke, Carbon Monoxide Detectors, and Fire Extinguishers	Installation of smoke/CO detectors is allowed where detectors are not present or are inoperable. Replacement of operable smoke/CO detectors is not an allowable cost. Providing fire extinguishers is allowed only when solid fuel is present.	Check for operation.	Provide client with verbal and written information on use of smoke/CO detectors and fire extinguishers where allowed.	Where to install detectors. Local code compliance.
Solid Fuel Heating (Wood Stoves, etc.)	Maintenance, repair, and replacement of primary indoor heating units is allowed where occupant health and safety is a concern. Maintenance and repair of secondary heating units is allowed.	Required inspection of chimney and flue and combustion appliance zone depressurization.	Provide safety information including recognize depressurization.	How to perform CAZ depressurization test and proper inspection.
Space Heaters, Stand Alone Electric	Repair, replacement, or installation is not allowed. Removal is recommended.	Check circuitry to ensure adequate power supply for existing space heaters.	Inform client of hazards and collect a signed waiver if removal is not allowed.	Awareness of guidance.
Space Heaters, Unvented Combustion	Removal is required, except as secondary heat where the unit conforms to ANSI Z21.11.2. Units that do not meet ANSI Z21.11.2 must be removed prior to weatherization but may remain until a replacement heating system is in place.	Testing for air-free carbon monoxide (CO) is allowed. Check units for ANSI Z21.11.2 label.	Inform client of dangers of unvented space heaters - CO, moisture, NO2, CO can be dangerous even if CO alarm does not sound.	How to perform air-free CO testing. Understanding the dangers of unvented space heaters.

Health and Safety Issue	Action/Allowability	Testing	Client Education	Training
Space Heaters, Vented Combustion	Should be treated as furnaces.	Venting should be tested consistent with furnaces.	Not applicable.	Proper testing methods for safe operation (draft and CO) should be conducted and for steady state efficiency if possible.
Spray Polyurethane Foam (SPF)	Use EPA recommendations (available online at http://www.epa.gov/dfe/pubs/projects/spf/spray_polyurethane_foam.html) when working within the conditioned space or when SPF fumes become evident within the conditioned space. When working outside the building envelope, isolate the area where foam will be applied, take precautions so that fumes will not transfer to inside conditioned space, and exhaust fumes outside the home.	Check for penetrations in the building envelope. Sensory inspection inside the home for fumes during foam application.	Provide notification to the client of plans to use two-part foam and the precautions that may be necessary.	Training on use of various products with specification for each application type. MSDS sheets. Temperature sensitivity.
Ventilation	2010 (or most current) ASHRAE 62.2 is required to be met to the fullest extent possible, when performing weatherization activity (must be implemented by January 1, 2012). Implementing ASHRAE 62.2 is not required where acceptable indoor air quality already exists as defined by ASHRAE 62.2. Existing fans and blower systems should be updated if not adequate.	ASHRAE 62.2 evaluation, fan flow, and follow up testing are required to ensure compliance.	Provide client with information on function, use, and maintenance of ventilation system and components. Include disclaimer that ASHRAE 62.2 does not account for high polluting sources or guarantee indoor air quality.	ASHRAE 62.2 training required including proper sizing, evaluation of existing and new systems, depressurization tightness limits, critical air zones, etc.
Window and Door Replacement, Window Guards	Replacement, repair, or installation is not an allowable health and safety cost but may be allowed as an incidental repair or an efficiency measure if cost justified.	Not applicable	Provide information on lead risks.	Awareness of guidance.

INDEX

A

Acoustical sealant 92
Adhesives
  caulking as 91-93
  construction 93
  for polystyrene foam 93, 201
Air barriers
  air permeance of 464
  definition 464
  primary vs. secondary 465
  testing for leaks 462-471
Air conditioners
  inspections 344-345
  refrigerant charge 347
Air filters
  oil burner 272
Air handlers
  See also Blowers
  see also Furnaces
  sealing holes in 249
Air leakage
  of materials, rates 464
  when to test 456
Air leaks
  ceilings 121-123
  chimneys 288
  floor cavities 121
  plumbing 185
  porches 119
  size, type 86
  soffits 121
  stairways 119, 188
Air permeance
  of building materials 464
Air quality 19
  See also Indoor air quality
Air sealing
  door/window frames 162-163
  duct boots 317-321
  masonry surfaces 163
  materials for 88-90
  mobile homes 428-429
  return ducts 317-318
  supply ducts 319-321
  with foam 191-201
Air separator 327
Air shutters, oil 268
Airflow
  improving low 306
  testing for unbalanced 301-302
  troubleshooting 297-302
Air-free CO measurement 22
Air-to-air heat exchangers 371-372
Alarms
  carbon monoxide 23
  smoke 23
American Gas Association
  venting categories 289
Appliances
  energy measures 391-413
Asbestos 38-39, 52-53
Attics
  air sealing 123
  finished 121, 141-146
  hatches 118
  insulation 126-148
  ventilation 127-376

B

Backdrafting 237
Backer rod 90
Balloon framing 172
Band joists
  air sealing 163
  insulation 191-192
Baseload
  analysis example 81
  measures 391-409

Basements
air sealing 189
insulation 199-203
testing for air leakage 471
thermal boundary 183-185
Bathtub
air sealing 186
Batts
floor cavities 194-196
for basements 200
open wall cavities 173-174
Blower doors
components/description 456-458
preparing for tests 458
pressure diagnostics 462-471
simple zone testing 465-466
test procedures 459
testing 456-461
Blowers
controls 304
Boilers
corrosion 325
efficiency 327-328
low-limit control 328
maintenance/efficiency 325-326
sizing 254
Burners
gas, servicing 233-235
nozzle for oil 268
oil 267-273

C

Cad cell 271
Cans. See Lights, recessed
Cantilevered floor
testing 470
Cantilevered floors
air sealing 189
Carbon monoxide 21-25, 247
air-free measurement 22
alarms 23
causes of 22
causes/solutions 248
exposure limits 22
standard for oil 270
testing 22, 236
Caulking 428
fire-rated 92
types of 91-93
uses of 121-131
CAZ 295
Ceilings
air leakage 121-123
insulation 126-148
Cellulose insulation
characteristics 99-100
stuffing material 90
CFL 399
See also Compact fluorescent lamps
CFM50
defined 456
Charge
refrigerant 347
Chimney effect. See Stack effect
Chimney liners
sizing 285
Chimneys
air leakage 288
air sealing around 114
all-fuel 286
and insulation safety 130
clearances 286
masonry specifications 283
measures to improve draft 242
retrofit liners 284, 291
termination 287
types 282
when to reline 290
Clothes dryers 392, 403-405
CO 19
See also Carbon monoxide
Coils
cleaning 344
Combustion
oil standards 270

problems/solutions 243
testing/analysis 244-248
the chemical process 245
Combustion air
cfm requirements 237, 292
confined spaces 294-295
methods of providing 292
unconfined spaces 293-294
Combustion losses
excess air 328
Combustion zone
definition 237, 292
depressurization 87
Compact fluorescent lamps 116, 399-401
Computers, energy consumption392
Condenser coils
cleaning 344
Construction adhesives 93
Consumption
of energy 78
Convectors
fin-tube 328
Cooling
evaporative coolers 382-386
Corrosion 325
Costs
seasonal/baseload 80
Crawl space
thermal boundary 472
Crawl spaces
air sealing 163
conditioned 379
thermal boundary 183-185
ventilation 207

D

Dampers
balancing 298
Dense-packed insulation 170-172
Diagnostics
airflow 297-302
building shell 462-471
house pressure 316-317
pressure-pan testing 310-312
unbalanced airflow 301-302
Doors 226
mobile home 446
replacement 226
sealing frames 162-163
weatherstrip 229, 230
Draft
and duct improvements 241
measuring, illus. 266
over-fire 268
strength & types of 237
Draft proofing
see also Air sealing
Drainage 109, 207
Drywall 89, 116, 163, 200, 202
Duct blower
leak-testing 313-315
Duct mastic 92
Ductboard
deteriorating facing 321
Duct-induced house pressure 316-317
Ducts
air sealing boots 317-321
duct-airtightness testing 313-315
evaluating leakage 309-312
finding leaks 309-312
improvements to solve draft problems 241
in crawl spaces 193
Insulation 322-323
mastic 92
mobile home leakage 431-432
pressure-pan testing 310-312
sealing leaks 317-321
sealing return 317-318
sealing supply 319-321
static pressure 298-300
thermal boundary and 473
troubleshooting leakage 309-322

Dust
and respirators 42
protecting clients from 53
worker hazard 52-53

E-F

Efficiency
storage water heaters and421-422
Efflorescence 31
Egress windows 225
Electric furnaces. See Furnaces, electric
Electric heat 334-341
baseboard 335
furnaces 336
Electrical safety 43-44
Energy
baseload measures 391-409
consumption 78
Energy auditor
responsibilities 65-74
Energy audits
ethics, bias 66
Energy consumption 392
Energy factor 421
water heating 415
Energy recovery ventilators371-372
Energy use
analysis 78-81
analysis, example 81
EPA lead rules 40-41
Ethics 66
Evaporative coolers 382-386
maintenance 385-386
operation 383-384
sizing, selection 385
Excess air
oil burners 270
Expansion tanks 327
Fiberglass insulation
basements 200
characteristics 97-99
floor batts 194-196
floor blowing 193-194
for stuffing 90
mobile homes 434-444
R-value 164
wall batts 173-174
Fill tubes
use for wall insulation 440
Filters 345
air, installation 249
Fire partitions 20
Fire safety
closed-cell foam 104
insulation 127-131
light fixtures 116, 128-129
Fireplaces
air leakage 114
Fire-rated assemblies 92
Firewalls 20
Flame characteristics 265, 274
Flashings 109
Flexduct
joints 320
Floors
cantilevered 189, 470
insulation 192-194
mobile homes 441-444
sealing cavities 121
thermal boundary 472
Flue dampers. See vent dampers
Flue-gas analysis 268
Fluorescent lamps
compact 116
Foam
basements, spray 201
characteristics of materials 104-106
closed-cell polyurethane 102-104
injectable 103-104
liquid applied 191-201
liquid sealant 93-94
one-part 93-94
open-cell polyurethane 103
spray 102-104

two-part 94
Foam board 89
basement insulation 201-203
EPS 105
polyisocyanurate 106
wall sheathing 176-177
XPS 105-106
Foundation insulation 196-203
Foundations
insulation 379
Furnace fans, energy consumption 392
Furnaces
installation 248-253
operating parameters 305
replacement 248-253
sealing holes in 249
temperature rise 304

G

Galvanized steel 89
Garages
thermal boundary 473
Gas burners
operation of 245
Gores 320
Ground moisture barrier35, 108, 184

H

Hazardous materials 53-54
protective equipment 42, 53
Hazards
avoiding 19-57
Health and safety 19-57
communication 47-48, 54
customer 21-44
MSDS 54
worker 46-57
Heat pumps
efficiency 336-340
room 340-341
testing 337-338
Heat recovery ventilators 371-372
Heating systems
electric 334-341
electric baseboard 335
electric furnaces 336
forced-air 297-324
heat pumps 336-340
hot-water 324
hydronic 254-255, 326-329
oil-fired 267-273
replacement 255
room heat pumps 340-341
steam 329-334
High limit
hot-water heating 327
steam 331
Hot tubs, energy consumption 392
House depressurization limit
for determining BTL 356
House pressures
limits 301
measuring 457
reducing 241
unbalanced airflow 301-302
HRVs.
See Heat recovery ventilators
Hydronic heating systems 326-329

I

IAQ 19
See also indoor air quality
IC-rated fixtures 116, 129
Ignition barriers 21, 104, 107
Indoor air pollution
controlling 21-39
Indoor air quality 21-39
see also Ventilation
worker 52-53
Infiltration 86
See also
Air sealing, Air leakage
Injuries
preventing 46-57

Inspections
air conditioners 344-345
final 76
in-progress 75
Insulation
attic 126-148
basements 199-203
cellulose 99-100
cellulose stuffing 90
characteristics 96-106
dense-packed cellulose 170-172
durability 107-109
fiberglass batts 173-174, 194-196
fiberglass, blown 193-194
fire safety 127-131
foam 191-201
foam sheathing 176-177
foundation 196-203, 379
hydronic pipe 255
hydronic piping 328, 334
injectable foam 103-104
mobile home 434-444
non-combustible 100, 106
polystyrene beads 106
pourable 106-107
rock wool 100
safety 107
spray foam 102-103
steam piping 328, 334
to reduce condensation 33
wall 164-179
wall, mobile home 439
water heaters 409-413
Intermediate zones
defined 457
Intumescent paint 21, 107

J-M

Kneewalls 121, 144-146
Ladders
safety 55-56
Lawrence Berkeley Laboratory (LBL) 392
Lead safety 39-43
EPA RRP rule 40-41
Lead-safe weatherization 41-43
Leakage area 462
Light fixtures
fire safety 116, 128-129
Lighting 399-401
Line-voltage thermostats 335
Low-flow shower head 408
Low-limit 255
Lungs
protecting 52-53
Manometers
digital 237, 458
Masonry
sealing 163
Mastic
duct 92
Material Safety Data Sheets 48, 53
Mesh tape 320
Metering
refrigerators 394-397
Mildew 86
See also Mold
Mobile homes 427-449
air sealing 428-429
air-leakage locations 429
construction/components 427
doors 446
duct leaks 431-432
duct pressure testing 434
floor insulation 441-444
insulation 434-444
roof insulation 434-438
skirting 449
wall insulation 439
windows 445-446
Moisture
and health 30
barriers, ground 31, 35, 184, 207
problems 28-34
source reduction 32-34

sources 28-30
water leaks 31-32
Mold 30
MSDS. See Material Safety Data Sheet

N-O

National Fire Protection Association
standards 279
National Safety Council 54
NFPA. See National Fire Protection Association
Occupational Safety and Health Administration 46
Oil burners 267-273
air filter 272
excess air 270
maintenance/adjustment 267-273
nozzles 268
performance indicators 247, 270
Oil filters 272
Oil pressure 247, 270
Orifices
steam 332
Outdoor thermostat 340
Over-fire draft 268

P-Q

Paint
failure 30
Perlite 106
Pipe insulation 328, 334
Plaster 121
Plumbing penetrations
sealing around 185
Plywood
air barrier 89
Pollution
controlling sources 21-39
Polyethylene
cross-linked 90
Polyisocyanurate foam board 106
Polystyrene (EPS) beads 106
Polystyrene foam
adhesive for 93
expanded 105
extruded 105-106
Polyurethane
caulking 91-92
closed-cell foam 102-104
foam sealant 93-94
open cell foam 103
Porch roof
testing air leakage through 470
Porches
air leakage 119
Pressure
See also House pressures
measuring differences in 457
pan testing 310-312
WRT notation 457
zone leak-testing 465-466
Pressure boundary. See Air barrier
Pressure diagnostics. See House pressures, See Diagnostics
Pressure pan testing 310-312
Pressure tank 255
and pump 255
Pressure-relief valve 254, 326
Programmable thermostats 335
Propane 289
finding leaks 235
Pumps
hydronic, installation 255
Quality assurance 77
Quality control 76, 77

R-S

Radiator valves
thermostatic 332
Radiators 328
Radon 37-38
Recessed lights
air sealing 117, 158

Refrigerant
  charge 347
Refrigerators
  evaluation and replacement 392-397
  metering 394-397
Registers
  sealing around 317-321
  unoccupied spaces 321
Renovation, repair and painting rule 40-41
Reset controllers 329
Respirators 42, 49, 52-53
Rim joists
  air sealing 163
  insulation 191-192
Rock wool 100
Roofs
  mobile homes 434-438
R-values
  see also Thermal resistance
  of blown insulation 164
Safety
  commitment to 47-48
  communication 20, 47-48
  electrical 43-44
  fire 127-131
  insulation 107
  ladders 55-56
  new employees 48
  of residents 38
  preventing falls 54-56
  storage water heaters 419-420
  tools 56-57
  vehicles 49-50
  windows 222-225
  worker 46-57
Safety and health 19-57
Scaffolding
  safety 56
Sealants
  caulking 91-93
  foam 93-94
  one-part foam 93-94
  two-part foam 94
Siding
  removal 167
Silicone
  caulking 91
Siliconized latex caulk 91
Sizing
  air conditioners 346
Skirting
  mobile home 449
Smoke alarms 23
Smoke number 270
Soffits
  kitchen 121
Split-level homes 122
Stairways
  air leakage 119, 188
Static pressure 298-300
Steady-state efficiency 247, 270
  testing for 268
Steam
  orifices 332
Steam heating 329-334
Steam orifices
  replacing steam traps 332
Steam traps 329, 333
  switching to orifices 332
Steel
  galvanized 89
Stick pins 323
Storage water heaters 413-422
  efficiency 421-422
  safety 419-420
Storm windows
  exterior 207-209
  mobile home 445

Stove cement 92
Stuffing materials 90
Subcooling 347
Superheat 347
Superheat test 343
Supply ventilation 369-370

T-V

Tape
holding power 322
Televisions 392
Temperature rise
furnace 304
Termites 102, 105, 109
Termiticides 102, 105, 109
Thermal barriers 20, 107
Thermal boundary
see also Insulation
basements and crawl spaces 183-185
flaws in 86
ideal location 473
Thermal resistance
see also R-values
improving 157-171, 183-209, 434-446
of insulation materials 475
Thermostatic radiator valves 332
Thermostats
line voltage 335
outdoor 340
programmable 335
two-stage 340
Tools
safety 56-57
Torchiere 399-401
Tri-level homes 122
Utility bills
analysis, example 81
Valves
thermostatic radiator 332
Vapor barriers 108
Vehicle safety 49-50
Vent connectors 279-282
clearances 280, 281
materials 279
specifications 280
Vent dampers 329
Ventilation
attic 127-376
balanced 371
crawl spaces 207
determining need for 355
exhaust 368-369
supply 369-370
systems 367-372
through windows and doors 372
whole house 367-372
see also Indoor air quality
Venting
AGA categories 289
atmospheric 279-285
fan-assisted 290
Vermiculite 106

W-Z

Walls
dense-packing 170-172
inspection 167
insulated sheathing 176-177
insulation 164-179
Water
leakage 31-32
Water heaters
energy efficiency 407-411
insulation 409-413
setting temperature 411
storage 413-422
Water temperature
setting 411
Water-resistive barriers 108, 215
Weatherstrip
attic hatches 118, 186
doors 229, 230

windows 210-211
Well pumps
energy consumption of 392
Windows
double-hung,
weatherizing 211-213
egress 225
exterior storm 207-209
mobile home 445-446
repair and weatherstrip 210-211
replacement 213-220
safety 222-225
sealing frames 162-163
Wood decay 30
Wood heating 274-277
clearances 275
inspection checklist 276
Wood stoves
UL-listed 275
Work orders 74
Worst-case draft test 87, 237
Zones
combustion-appliance 237
input vs. reference 457
intermediate 309, 457
pressure testing 465-466
simple pressure test 465

GLOSSARY

Abatement : A measure or set of measures designed to permanently eliminate a hazard

Absolute humidity: Air's moisture content expressed in grains or pounds of water vapor per pound of dry air.

Absorptance: The ratio of a solar energy absorbed to incident solar. Also called absorbtivity.

Absorption: A solid material's ability to draw in and hold liquid, gas, or radiant energy.

Accent Lighting: Accent lighting illuminates walls, reduces brightness and contrast between walls and ceilings or windows.

Acoustical Sealant: Sealing agent used to minimize the entry or exit of sound from an interior space.

ACH50: The number of times in one hour that all of the air in a home is replaced by outside air through air leakage and/or ventilation.

Adsorption: Adhesion of a thin layer of molecules to a surface they contact.

Air Barrier: Any part of the building shell that offers resistance to air leakage. The air barrier is effective if it stops most air leakage. The primary air barrier is the most effective of a series of air barriers.

Air Changes per Hour at 50 Pascals (ACH_{50}): The number of times the volume of air in a structure will change in one hour at the induced blower door house pressure of 50 pascals.

Air Changes per Hour Natural (ACHnat) : The number of times the indoor air is exchanged with the outdoor air in one hour under natural driving forces. It can be estimated using a blower door.

Air conditioning: Cooling buildings with a refrigeration system. More generally means both heating and cooling.

Air Conditioning Contractors of America (ACCA): Industry group that works toward improving the air conditioning industry, promoting good practices and keeping homes and buildings safe, clean, and comfortable.

Air exchange: The process whereby indoor air is replaced with the outdoor air through air leakage and ventilation.

Air-free carbon monoxide : A measurement of CO in an air sample or flue gas that takes into account the amount of excess air (oxygen, O_2) in the sample, incorporating an adjustment to the as-measured CO ppm value, thus simulating air-free (oxygen-free) conditions in the sample. Usually measured in units of parts per million (ppm).

Air handler: A steel cabinet containing a blower with cooling and/or heating equipment and connected to ducts that transport indoor air to and from the air handler.

Air-handling unit (AHU): See air handler.

Air leakage: Uncontrolled ventilation through gaps in the pressure boundary. Typical sites of air leakage include around windows, pipes, wires and other penetrations.

Air-impermeable insulation: An insulation having an air permanence equal to or less than 0.02 L/s-m^2 at 75 Pa pressure differential tested according to ASTM E 2178 or E 283.

Air sealing: Air sealing is a systematic approach to reducing air leakage in a building.

Albedo: The ratio of reflected to incident light.

Altitude adjustment: The input modification for a gas appliance installed at a high altitude. When a gas appliance is installed more than 2000 feet above sea level, its input rating may be reduced by approximately 4 percent per 1000 feet above sea level.

Ambient: Of the surrounding area or environment.

Ambient air : Air in the habitable space. Also the air around a human observer.

Ambient lighting: Lighting spread throughout the lighted space for safety, security, and aesthetics.

American Gas Association (AGA): A trade association representing American natural gas supply companies. AGA collaborates with ASC and NFPA on the National Fuel Gas Code.

American National Standards Institute, Inc. (ANSI): A private non-profit organization that oversees the development of voluntary consensus standards for products, services, processes, systems, and personnel in the United States.

American Recovery and Reinvestment Act (ARRA): Bill signed by President Obama in February 2009 as an economic stimulus package

American Society of Heating, Refrigeration, and Air Conditioning Engineers (ASHRAE): A technical society for individuals and organizations interested in heating, ventilation, air-conditioning, and refrigeration. ASHRAE publishes standards and guidelines relating to HVAC systems and issues.

American Society for Testing and Materials (ASTM) : A standards organization that develops and publishes voluntary consensus technical standards for a wide range of materials, products, systems, and services.

Amperage: The rate that electrical current flows through an appliance at any given time; also called current.

Ampere: A unit that measures the rate that electrons move through a conductor. It is comparable to a measurement of water flow.

Anemometer: A device for measuring air speed, used in weatherization work to determine flow rates at registers.

Annual Fuel Utilization Efficiency (AFUE): A laboratory-derived efficiency for heating appliances that accounts for chimney losses, jacket losses, and cycling losses, but not distribution losses or fan/pump energy.

Annual return: The annual savings divided by the initial cost of an ECM, expressed as a percent.

Appliance: Any device powered by electricity or combustion fuel.

Approach temperature: The temperature difference between the fluid inside a heat exchanger and the fluid outside it.

Aquastat: A heating control device that controls the burner or the circulator in a hydronic heating system

Area: Length x width = area

As-measured Carbon Monoxide : A calculation of CO in parts per million (ppm) of a combustion-gas sample with the excess air (oxygen, O2), diluting the CO concentration removed by the calculator in the fuel-gas analyzer.

ASHRAE: American Society of Heating, Refrigerating, and Air-Conditioning Engineers. International technical society which develops standards for those concerned with refrigeration processes and the design and maintenance of indoor environments.

ASHRAE 62.2-20xx: Air quality standard developed for low-rise residential buildings. Defines the roles of an minimum requirements for mechanical and natural ventilation systems and the building envelope. The most current standard of time of writing was ASHRAE 62.2-2013.

Asbestos: A fibrous mineral with fireproofing and insulating characteristics manufactured into a variety of building materials. Small, sharp, asbestos fibers are a known carcinogen when inhaled.

Association of Energy Engineers (AEE): A professional organization for energy engineers. AEE offers many certification programs, including one for residential energy auditors.

Association of Home Appliance Manufacturers (AHAM): Trade association representing the appliance manufacturing industry

Atmospheric appliance : A combustion appliance that burns and exhausts its combustion gases at atmospheric pressure.

Atmospheric pressure : The weight of air and its contained water vapor on the surface of the earth. At sea level this pressure is 14.7 pounds per square inch.

Attic: The unfinished space between the ceiling assembly of the top story and the roof assembly.

Attic, habitable: A finished or unfinished area, not considered a story. See the IRC for specific requirements.

Audit: The process of identifying energy conservation opportunities in buildings.

Auxiliary heat: Electric resistance heat in a heat pump that heats the building when the compressor isn't able to provide the entire heat capacity needed for cold weather.

Awning window: Awning windows are essentially casement windows that swing vertically. Awning windows are often used in basements. Jalousie windows, found on older mobile homes, are a type of awning window.

B-vent: A double-wall pipe for gas- or propane-fired combustion appliances.

Backdrafting: Continuous spillage of combustion gases from a vented combustion appliance into the conditioned space.

Backdraft damper: A damper, installed near a fan, that allows air to flow in only one direction.

Backer rod: Polyethylene foam rope used as a backer for caulking.

Baffle: 1. A lightweight plate that directs air from a soffit over attic insulation and along the bottom of the roof deck to ventilate the attic and cool the roof deck. 2. A plate or strip designed to retard or redirect the flow of flue gases.

Balance point : The outdoor temperature at which no heating is needed to maintain inside temperatures.

Ballast: A coil of wire or electronic device that provides a high starting voltage for a lamp and limits the current flowing through it

Balloon framing: A method of construction in which the vertical framing members (studs) are continuous pieces running the entire height of the wall.

Band joist: See - Rim Joist

Barometric Vent Damper : A device installed in the heating unit vent system to control draft. Usually used on oil-fueled units or gas units with power burners

Barrier: Material used to block passage or movement.

Basement: That portion of a building that is partly or completely below grade.

Batt: A blanket of preformed insulation, generally 14 inches to 23 inches wide, and varying in thickness from 3.5 inches to 10 inches.

Beam: A strong horizontal building support used to carry the weight of a floor or roof.

Belly blow: A process for re-insulating floor cavities with blown-in insulation.

Belly return : A configuration found in some mobile homes that uses the belly cavity as the return side of the heating/cooling distribution system.

Bimetal element: A metal spring, lever, or disc made of two dissimilar metals that expand and contract at different rates as the temperature around them changes. This movement operates a switch in the control circuit of a heating or cooling device.

Blocking : A construction element or material used to prevent the movement of air or insulation into or through building cavities.

Block Frame: A non-finned frame that can be used as new or retrofit installation in a block wall application or as a wood window replacement frame.

Blower Door: A blower door is a diagnostic tool used to locate the points of infiltration in the building envelope and help prioritize the air sealing protocols.

Blow-Down: The act of removing water from a boiler to remove sediment and suspended particles.

Blower Fan: The squirrel-cage fan in a furnace or air handler.

Blown Insulation : A loose-fill insulation that is blown into attics and building cavities using an insulation blowing machine.

Board Feet: A measurement of lumber volume. A board foot equals 144 cubic inches of wood

Boiler: A fossil fuel appliance used for producing hot water or steam as the medium to distribute heat to the dwelling unit.

Boot: A duct section that connects between a duct and a register or between round and square ducts

Bonus Room: A room that does not meet building code requirements in order to be habitable.

Borescope: An inspection tool; a reflexible tube with a light and camera or viewer at one end. Boroscopes can be used to look into wall cavities and other tight spaces that would be otherwise impossible to visually inspect.

Boundary: Defines where an area ends and another begins.

Branch Circuit: An electrical circuit used to power outlets and lights within a home.

Branch Duct: An air duct which branches from a main duct.

Brightness: The intensity of the sensation derived from viewing a lit surface. Measured in footlamberts, it is also called luminance or luminous intensity.

British Thermal Unit (Btu): The quantity of heat required to raise the temperature of one pound of water one degree Fahrenheit.

BTUh : British Thermal Units per hour.

Building Cavities: The spaces inside walls, floors, and ceilings between the interior and exterior sheeting

Building Envelope: The area of the building that encloses its conditioned and unconditioned spaces.

Building Management System (BMS): Computer-based control system installed in buildings that controls and monitors the building's mechanical and electrical equipment such as air handling and cooling.

Building Performance Institute (BPI) : Organization supporting the development of a highly professional building performance industry through individual and organizational credentialing and a quality assurance program.

Building Science: A complex perspective on buildings, using contemporary technology to analyze and solve problems of design, construction, maintenance, safety, and energy efficiency.

Building Shell: Separates a building's indoors from the outdoors.

Bulk Moisture: Large amounts of water intrusion, for example from wind-driven rain or sub-surface water.

Burner: A device that facilitates the burning of a fossil fuel, like gas or oil.

Butyl-backed tape: Heavy-duty, pressure-sensitive duct joint rolled sealant.

Bypass : An air leakage site that allows air to leak out of a building passing around the air barrier and insulation.

Cad Cell: A flame sensor composed of the chemical compound cadmium sulfide. Its purpose is to sense whether a flame is present during a burner cycle. If a flame is not detected, it activates a relay, which shuts the burner down.

Calibration: Comparison of the test results of an instrument to a known reference point.

Call-back: Having a weatherization team return to a job site to perform work not done or redo work done unsatisfactorily.

Can light: A light fixture (or can) that is set into the ceiling. Also called a recessed light fixture.

Cantilever: A projecting structure, such as a beam, that is supported at one end and carries a load at the other end or along its length.

Cantilevered Floor: A floor that extends beyond the foundation of the framed structure below it.

Cape Cod: A house design featuring a finished attic space, also called a one-and-a-half story.

Capillary action: The ability of water to move through materials, even upward against gravity, through small tubes or spaces.

Capillary barrier: A material or air space designed to stop capillary action from carrying water into a building.

Carbon Dioxide (CO2): A heavy, colorless, nonflammable gas formed by the oxidation of carbon, by combustion, and by the respiration of plants and animals. One of two main products of complete combustion of a hydrocarbon (the other is water vapor).

Carbon Monoxide (CO): Carbon Monoxide is a tasteless, odorless, colorless and poisonous gas that is a by-product of incomplete combustion of fossil fuels. It is usually caused by a lack of air to support combustion or impingement of the flame.

Casement Window: Casement windows have a single operable sash that swings outward on a horizontal plane. Casement window frames that have gone out of square due to settling can stick and quite possible render these types of windows inoperable.

Casing: Exposed molding or trim around a window or door.

Cathedral Ceiling: A pointed or slanting celling of a room that rises through more than one floor.

Cathedralized Attic: An attic that is insulated at the underside of the roof deck rather than at the ceiling.

Caulking: Mastic compound for filling joints and cracks.

Celsius: A temperature scale on which water freezes at 0°C and boils at 100°C.

Cellulose Insulation: Insulation, packaged in bags for blowing, made from newspaper or wood waste and treated with a fire retardant.

Centigrade: A temperature scale on which water freezes at 0 degrees and boils at 100 degrees

Central Heating System: This refers to the primary heating system of the dwelling unit including the heat producing appliance, the return and supply system for heat distribution.

Certification: Recognition by an independent person or group that someone can competently complete a job or task, frequently demonstrated by passing an exam.

Certified Renovator: A person authorized by the EPA to perform repair and renovation projects that disturb lead-based paint.

CFM_{50}: This term means the amount of cubic feet per minute of air moving through a structure and measured at 50-pascal pressure.

CFMn: The cubic feet of air flowing through a house from indoors to outdoors during typical, natural conditions. This figure can be roughly estimated using a blower door.

CFM - Cubic Feet per Minute: Usually seen as CFM 50, cubic feet per minute of air movement due to 50 pascal house/outdoor pressure differential.

Chaseway: Cavity within a building with a purpose of conveying pipes, ducts, etc. through the building. Chaseways, such as plumbing walls, are common sites for air leakage.

Chimney: A building component designed for the sole purpose of assuring combustion by-products are exhausted to the exterior of the building.

Chimney connector: A pipe that connects a fuel-burning appliance to a chimney. Also see vent connector.

Chimney Flue: A passageway in a chimney for conveying combustion gases to the outdoors.

Chimney Chase: Typically refers to the cavity between the chimney and the framing and other building materials that surround the chimney.

Circuit Breaker: A device found in a Circuit Panel Box that completes an electric circuit. This breaker disconnects the circuit from electricity when it senses an overload of current.

Cladding: The exterior covering or coating on a structure, such as wood siding, stucco, or brick veneer.

Clean and Tune (C&T): A procedure performed on a heating or cooling system by a qualified technician to optimize its efficiency.

Cleanout: An opening in a chimney (usually at its base) to allow inspection and the removal of ash or debris.

Clearances: Allowable distances between heat-producing appliances, chimneys, or vent systems and combustible surfaces.

Climate zone: An area with a prevailing climate that distinguishes it from other areas by parameters such as temperature, rainfall, and humidity.

Codes: Any set of standards set forth and enforced for the protection of public health and humidity.

Circuit breaker : A device that automatically disconnects an electrical circuit from electricity under a specified or abnormal condition of current flow.

Co-efficient of Performance (COP): A heat pump or air conditioner's output in watt-hours of heat moved divided by watt-hours of electrical input.

Coil: A snake-like piece of copper tubing surrounded by rows of aluminum fins that clamp tightly to the tubing and aid in heat transfer.

Coil Stock: Sheet metal packaged as a coil in various widths.

Cold Air Return (return side) : Ductwork through which house air is drawn for reheating during a furnace's cycle.

Cold roof: The condition in which the roof temperature is equalized from top to bottom by roof ventilation and/or roof insulation.

Collar beam: A horizontal piece in roof framing that provides structural strength by connecting opposite rafters.

Color rendering index (CRI): A measurement of a light source's ability to render colors the same as sunlight. CRI has a scale of 0 to 100.

Color temperature: A measurement of the warmness or coolness of a light source in the Kelvin temperature scale.

Column: A vertical building support usually made of wood or steel.

Combustible: Means something will burn, although not necessarily readily.

Combustible gas leak detector : A device for determining the presence and general location of combustible gases in the air.

Combustion : The act or process of burning. Oxygen, fuel, and a spark must be present for combustion to occur.

Combustion air: Air that chemically combines with a fuel during the combustion process to produce heat and flue gases, mainly carbon dioxide and water vapor.

Combustion Analyzer: A device used to measure and analyze combustion gases for efficiency and safety in heating units.

Combustion Appliance: Any appliance in which combustion occurs.

Combustion Appliance Zone (CAZ) : The closed space or area that holds one or more combustion appliances.

Combustion Appliance Zone (CAZ) testing: Diagnostics performed to ensure that combustion appliances work properly and that house pressures allow combustion gases to vent.

Combustion Byproducts: Gases, vapors, and particulates produced whenever carbon-based fuels such as gas, oil, kerosene, wood, or charcoal are burned.

Combustion Chamber: The area inside the heat exchanger where the flame burns

Combustion efficiency: Synonymous with steady-state efficiency.

Combustion gases: Combustion byproducts.

Commissioning: The process of testing and adjusting building mechanical systems.

Common vent : The portion of the vent or chimney through which passes products of combustion from more than one appliance.

Compact Fluorescent Lamp (CFL) : A small fluorescent light engineered to fit in an Edison base of an incandescent fixture.

Competency: Demonstrated ability to perform a job or task.

Compressor: A motorized pump that compresses the gaseous refrigerant and sends it to the condenser where heat is released

Concentrically Constructed Direct-Vent : A direct-vent appliance that has an exhaust-gas vent and a combustion-supply-air vent arranged in a concentric fashion: one pipe is inside the other with a space between the walls of each.

Condensate: Vapor condensed back to a liquid. For example: water or refrigerant.

Condensate Receiver: A tank for catching returning condensate water from a steam heating system.

Condense: When a gas turns into a liquid as it cools, it condenses. When a gas condenses into a liquid it releases heat.

Condenser: The coil in a refrigeration system where the refrigerant condenses and releases heat.

Condensing furnace: A high-efficiency furnace that removes latent heat from combustion gases by condensing water vapor out of the combustion gases.

Conditioned: Intentionally heated or cooled areas of a building

Conditioned Air: Air that has been heated, cooled, humidified, or dehumidified to maintain comfort.

Conditioned space: For energy purposes, space within a building that is provided with heating and/or cooling equipment or systems, or communicates directly with a conditioned space. For mechanical purposes, an area, room or space being heated or cooled by any equipment or appliance.

Conductance: The quantity of heat, in BTUs, that flows through one square foot of material in one hour, when there is a one degree Fahrenheit temperature difference between both surfaces. Conductance values are given for a specific thickness of material.

Conduction: Conduction is the transfer of heat through a material by molecular movement. Reducing heat loss through conduction can include the installation insulation in wall, ceiling, and floor cavities, insulation of hot water tanks, creating thermal breaks in window and door framing, and sealing of bypasses and other sources of air movement.

Conductive heat flow: Transfer of heat through a solid homogeneous material.

Conductivity : The quantity of heat that flows through one square foot of homogeneous material, one inch thick, in one hour, when there is a temperature difference of one degree Fahrenheit between its surfaces.

Confined Space : A space, defined for the purpose of evaluating combustion air, with a volume of less than 50 cubic feet per 1,000 BTU per hour of the total input rating of all combustion appliances installed in that space.

Contractor: Any for-profit, not-for-profit, or government entity that provides services under contract, not as employees of the purchasing agency.

Contrast: Difference in brightness measured by the relationship between an object's brightness and the brightness of its background.

Control Circuit: An electrical circuit that activates or deactivates a power circuit or opens and shuts a valve.

Convection: The transfer of heat caused by the movement of a fluid like water or air. When a fluid becomes warmer it becomes lighter and rises.

Convective Loop: Heat flow resulting from airflow caused by temperature differences between surfaces.

Cooling Load: The maximum rate of heat removal required of an air conditioner when the outdoor temperature and humidity are at the highest expected level.

Core competencies: Essential skills for weatherization workers, defined by the Weatherization Trainers Consortium.

Cost Effective: Having an acceptable payback, return-on-investment, or savings-to-investment ratio.

Crawl Space: The low space beneath the ground floor of a building that gives workers access to wiring and plumbing.

Crew Leader: A crew leader is a residential energy professional who is responsible for supervising the retrofitting activities specified in the scope of work.

Critical Framing Juncture : An intersection of framing members and envelope components that require special attention during prep and installation of insulation.

Cross Section: A view of a building component drawn or imagined by cutting through the component.

Crosswise floor joist configuration: home joist configuration where the main duct is located beneath the floor joists and connected by boots to the sub-floor.

Cubic Foot Per Minute (CFM): A measurement of air movement past a certain point or through a certain structure. See also *CFM_{50} and CFMn.*

Curtain Wall: A wall between columns and beams that supports no weight but its own

Dado: A rectangular groove cut into wood.

Decatherm: One million BTUs or 10 therms.

Decking: The wood material installed under roofing material to support the roofing.

Decommissioning: Removing or retiring equipment from active service including disposing of hazardous material in an approved way.

Deferral of services: Postponement or denial of weatherization services to the client.

Dehumidification: The removal of water from the air. Excess humidity can cause mold.

Degree Days (DD): A measure of outdoor temperature calculated by adding the temperature differences between an indoor temperature of 65°F and the daily average outdoor temperature for a one-year period.

Delta T: Temperature difference.

Demand: The peak need for electrical energy. Some utilities levy a monthly charge for demand.

Demand Side Management (DSM): The planning and implementation of those utility-sponsored conservation of electricity or gas.

Dense Packing: Blowing insulation with sufficient force to create a high density to reduce settling and minimize air leakage and air convection.

Density: The weight of a material divided by its volume, usually measured in pounds per cubic foot.

Depressurization Tightness Limit (DTL): A calculation procedure, expressed in units of CFM_{50}, performed to estimate the building tightness level at which combustion appliances might backdraft when the house is under conditions of worst-case depressurization. The DTL sets a low limit for air sealing that may or may not be lower than the BTL for the same house.

Depressurize: Cause to have a lower pressure or higher vacuum with respect to a pressure reference point such as the outdoors.

Desiccant: A liquid or solid material used to absorb water or water vapor.

Design Temperature: A high or low temperature used for designing heating and cooling systems when calculating the building load.

Desk Monitoring: Monitoring activities performed through review of paperwork.

De-superheater: A heat exchanger that removes the superheat from a compressed refrigerant and transfers that heat to another fluid, usually water.

Dew point: The warmest temperature of an object in an environment where water condensation from the surrounding air would form on that object.

Diffusion: Movement of water vapor through a material as a function of the vapor pressure across and the vapor permeability of the material.

Dilution air: Air that enters through the dilution device-an opening where the chimney joins to an atmospheric-draft combustion appliance

Dilution Device: A draft diverter, draft hood, or barometric draft control on an atmospheric-draft combustion appliance.

Direct current: An electric current flowing in only one direction.

Direct Leakage: Air enters and exits at same location; occurs at direct openings to outdoors.

Direct-vent appliance : A combustion appliance for which all combustion gases are vented to the outdoors through an exhaust vent pipe and all combustion supply air is supplied to the combustion chamber from the outdoors through a separate, dedicated supply-air pipe.

Discount rate: The interest rate at which expected future cash flows can be discounted. It includes both the present value and fuel escalation rate, and is used to account for the time value of money and the changing price of fuels.

Distribution system: A system of wires, pipes, or ducts that distributes energy.

DOE: The United States Department of Energy.

Domestic hot water (DHW): Refers to a separate, closed system to heat potable (drinkable) water and supply it to the dwelling unit for washing, bathing, etc.

Dominant duct leakage: To measure either dominant supply or return leaks in a forced-air distribution system by measuring house pressure.

Door casing: A wooden trim around doors that covers the seam between the jamb and the wall.

Door stop: The wood trim fastened to the inside of the jamb that positions the door within the jamb and into the latching mechanism.

Dormer: A framed structure projecting above a sloping roof surface, and normally containing a vertical window.

Double-hung window: Double-hung windows have operable upper and lower sashes that slide vertically in a channel. Upper sashes are often painted shut.

Downflow: Airflow configuration in a furnace where cool air is taken from above and discharged as warm air from the bottom.

Downflow furnace: Furnace type where the blower is located at the top of the furnace cabinet and air is forced downwards across the heat exchanger and into the ducts located in the belly cavity

Downstream: Away from the source of the flow.

Draft: A pressure difference that causes combustion gases or air to move through a vent connector, flue, chimney, or combustion chamber.

Draft diverter: A device located in gas appliance flue pipe. Used to moderate or divert draft that could extinguish the pilot or interfere with combustion.

Draft fan: A mechanical fan used in a venting system to augment the natural draft in gas- and oil-fired appliances. These electrically operated, paddle-fan devices are installed in vent connectors.

Draft gauge: Device for testing chimney draft.

Draft hood: See draft diverter.

Draft inducer: A fan that depressurizes the combustion chamber or venting system to move combustion products toward the outdoors.

Draft regulator: A self-regulating damper attached to a chimney or vent connector for the purpose of controlling draft.

Drainage plane: A space that allows water storage and drainage in a wall cavity, adjacent to or part of the water-resistive barrier.

Dropped down belly: home configuration where a hump is formed in the floor by the main duct running in the center.

Dropped soffit: A lowered part of the ceiling in a home.

Drywall: Gypsum interior wallboard used to produce a smooth and level interior wall surface and to resist fire. Also called gypsum wall board or sheetrock.

Dry bulb temperature: Normal ambient air temperature measured by a thermometer.

Duct blower: A blower-door-like device used for testing duct leakiness and air flow.

Duct board: Rigid board composed of insulation material with one or both sides faced with a finishing material.

Duct boot: Transition piece that connects the main duct to the floor and is often vulnerable to failure.

Duct-induced pressure differences: Pressure differences between rooms in a building caused by the ducted air delivery system, can be due to supply ducts, return ducts, or both.

Duct zone: A building space or cavity that contains heating or cooling ducts.

Duplex: Any structure which consists of two separate dwelling units in one building.

Dwelling unit: A house, including a stationary mobile home, an apartment, a group of rooms, or a single room occupied as separate living quarters.

Eave: The part of a roof that projects beyond its supporting walls (See - Soffit)

Eave chute: Device that maintains air space between the insulation blanket and the roof sheathing and prevents insulation from clogging eave vents.

Eave vent: Vent opening located in the soffit under the eaves of a house to allow the passage of air through the attic and out the roof vents.

Efficiency: The ratio of output divided by input

Efficacy: The number of lumens produced by a watt used for lighting a lamp. Used to describe lighting efficiency.

Egress window: A window with a defined opening size for the purpose of fire escape.

Elastomeric: A characteristic of a material that is flexible and permits movement.

Elastomeric coating: Polymeric material, such as acrylic, that is used to repair roof leaks and to reduce solar heat gain.

Electric service: The electric meter and main switch, usually located outside the building.

Electro-mechanical: Describes controls where switching is performed by an automatic mechanical device like a bimetal or bulb-and-bellows.

Emergency heat: A heating device that doesn't require electricity used during an emergency. Or electric-resistance heating elements used for heating in case a heat pump's compressor fails.

Emittance: The rate that a material emits radiant energy from its surface. Also called emissivity.

Encapsulation: Any covering or coating that acts as a barrier between the hazard, such as lead-based paint, and the indoor environment.

Enclosure: The building shell. The exterior walls, floor, and roof assembly of a building. Also referred to as building envelope.

Energy: A quantity of heat or work

Energy audit: The process of identifying energy conservation opportunities in buildings.

Energy auditor: One who inspects and surveys the energy use of buildings in order to promote energy conservation.

Energy conservation measures (ECM): Building components or products installed to reduce the building's energy consumption.

Energy consumption: The conversion or transformation of potential energy into kinetic energy for heat, light, electricity, etc.

Energy education: The process used by WAP staff to inform customers of the ways they can further reduce energy consumption through altering their behavioral patterns. The most effective protocol includes multiple interaction and reinforcement with the household residents and use of a negotiated and written action plan.

Energy efficiency: Term used to describe how efficiently a building component uses energy.

Energy efficiency ratio (EER): A measurement of energy efficiency for room air conditioners. The EER is computed by dividing cooling capacity, measured in British Thermal Units per hour (Btuh), by the watts of power. (See - Seasonal Energy Efficiency Rating or SEER)

Energy factor: The fraction of water heater input remaining in 64 gallons of hot water extracted from a water heater.

Energy Information Administration (EIA): Section of the U.S. Department of Energy providing statistics, data, and analysis on resources, supply, production, and consumption for all energy sources.

Energy rater: Evaluates the energy efficiency of a home and assigns a relative performance score, a certification received from HERS (Home Energy Rating System).

Energy-recovery ventilator (ERV): A ventilator that recovers latent and sensible energy from the exhaust airstream and imparts it to the incoming airstream.

Enthalpy: The internal heat of a material measured in Btus per pound.

Entropy: Heat unavailable to a closed thermodynamic system during a heat transfer process.

Envelope: The building shell. The exterior walls, floor, and roof assembly of a building. Also referred to as building enclosure.

Environmentally Sensitive: Highly susceptible to adverse effects of pollutants.

EPA, U.S. Environmental Protection Agency : EPA protects human health and safeguards the natural environment - air, water, and land upon which life depends.

Equivalent Leakage Area (ELA): Calculation, in square inches, of the total area of all holes and cracks in a structure. The leakage area is then accumulated to represent one total leakage point.

Equivalent length: The length of straight pipe or duct that has equivalent resistance to a pipe or duct fitting. Used for piping and duct design.

Equivalent duct length (EDL) : A measure of how much static pressure an exhaust fan has to overcome.

Equivalent leakage area (ELA): Calculation, in square inches, of the total area of all holes and cracks in a structure. The leakage area is then combined to represent one total leakage point.

Evaporation: The change that occurs when a liquid becomes a gas. Evaporation is the key process in the operation of air conditioners and evaporative coolers. Evaporation is a cooling process.

Evaporative cooler: A device for cooling homes in dry climates by humidifying and cooling incoming air by the evaporation of water.

Evaporator: The heat transfer coil of an air conditioner or heat pump that cools the surrounding air as the refrigerant inside the coil evaporates and absorbs heat.

Excess air: Air in excess of what is needed for combustion.

Exfiltration: This term describes the movement of air out of a building. Often refers to warm air leaving a building due to pressurization, infiltration, wind, stack effect, and/or convective flow.

Expanded polystyrene: White polystyrene insulation.

Expanding foam: An insulation product designed to expand and harden upon contact with the air. Available in canisters with spray nozzles that make it easy to apply foam in a wide variety of situations.

Expansion valve: A valve that meters refrigerant into the evaporator.

Fahrenheit: A temperature scale used in the United States and a few other countries. On the Fahrenheit scale, water boils at 212 degrees and freezes at 32 degrees.

Fan-assisted combustion : A combustion appliance with an integral fan to draw combustion supply air through the combustion chamber.

Fan control: A bimetal thermostat that turns the furnace blower on and off as it senses the presence of heat.

Fan-off temperature : In a furnace, the supply air temperature at which the fan control shuts down the distribution blower.

Fan-on temperature : In a furnace, the supply air temperature at which the fan control activates the distribution blower.

Federal Energy Management Program (FEMP): A program of DOE that implements energy legislation and presidential directives. FEMP provides project financing, technical guidance and assistance, coordination and reporting, and new initiatives for the federal government.

Feeder wires : The wires connecting the electric meter and main switch with the main panel box indoors.

Fenestration: Window and door openings in a building's wall.

Fiberglass: A fibrous material made by spinning molten glass used as an insulator and heat loss retardant.

Field testing: Assessment of a trainee's abilities conducted on-site, rather than in a classroom.

Fill Tube: A plastic or metal tube used for its stiffness to blow insulation inside a building cavity.

Fin comb: A comb-like tool used to straighten bent fins in air conditioning coils.

Final inspection: An evaluation of a weatherization job after its completion.

Finished attic: An attic that was converted to living space by the construction of dormers and knee walls.

Finned tube: A length or coil of pipe with heat transfer fins attached for water-to-air heat transfer.

Fire barrier: A tested building assembly, designed to contain a fire for a particular time period: typically 1-to-4 hours.

Fireblocking: Building materials installed to resist the free passage of flame to other areas of the building through concealed spaces.

Fire resistance: The property of materials or their assemblies that prevents or retards the passage of excessive heat, hot gases or flames under conditions of use.

Fire resistance rating: The period of time a building element, component or assembly maintains the ability to confine a fire, continues to perform a given structural function, or both.

Fire stop: Framing member designed to stop the spread of fire within a wall cavity.

Firewall: A structural wall between buildings designed to prevent the spread of a fire.

Firing chamber: The compartment inside an oil-burning furnace or boiler where the electrodes ignite the air/atomized oil mixture.

Flame impingement: The striking of flame against an object.

Flame rectification: A modern method of flame sensing, which uses the flame itself as a conductor in the flame-safety circuit.

Flame-retention head burner: A higher efficiency burner in an oil furnace that produces a hotter flame and operates with a lower air flow, thus reducing loss up the chimney.

Flame roll-out: Fuel gas combustion process occurring outside the normal combustion area of a combustion appliance.

Flame safety control: A control device used to stop the flow of fuel to the burner assembly in the event of no ignition.

Flame spread: The broadening or spreading of a flame.

Flammability: The rating for building materials that will burn readily when exposed to a flame.

Flammable: Combustible; readily set on fire.

Flashing: Waterproof material used to prevent leakage at intersections between the roof surface at walls or penetrations.

Floor Joists: The framing members that support the floor area.

Flue: The channel of pipe used to control air flow of combustion gases.

Flue gas: Gases arising from the combustion of fuels, mainly consisting of carbon dioxide. Fuel gas normally contains pollutants, such as carbon dioxide, nitrogen oxide, sulfur dioxide, and dust.

Flush flange: A window designed to provide a finished exterior appearance over a flat exterior surface like stucco.

Foam board: Plastic foam insulation manufactured most commonly in 4'x8' sheets in thickness of 1/4” to 3".

Foam compatible adhesive: Adhesive that is manufactured for the purpose of safely adhering to foam.

Foot candle: A measure of light striking a surface.

Footing: The part of a foundation system that actually transfers the weight of the building to the ground.

Forced draft: A vent system for which a fan installed at the combustion appliance moves combustion gases to the outdoors with positive static pressure in the vent pipe. Because of this positive pressure, the vent connector must be air-tight.

Friable : Easily broken into small fragments or reduced to powder, as with asbestos

Frost line: The maximum depth of the soil where water will freeze during the coldest weather.

Fuel escalation rate: Annual escalation rate of fuel prices based on the annual energy price forecasts of DOE's Energy Information Administration.

Furnace: An appliance for heating a medium to distribute heat throughout the dwelling unit.

Furnace blower: A part of the furnace that produces a current of air. Often referred to as the “blower” or “squirrel cage.”

Furnace plenum: An air chamber that gets filled directly by a large blower that is above, below, or adjacent to it.

Furring: Thin wood strips fastened to a wall or ceiling surface as a nailing base for finish materials.

Fuse: A current carrying element that melts if too much current flows in an electric circuit.

Gable: The triangular section of an end wall formed by the pitch of the roof.

Gable Roof : A roof shape that has a ridge at the center and slopes in two directions.

Gable vent: A screened vent installed at or near the peak of a roof gable that allows warm attic air to escape.

Gallons per minute (GPM): The unit for measuring water flow, frequently for showers.

Gasket: Elastic strip that seals a joint between two materials.

General heat waste: Weatherization materials that DOE has determined to be generally cost-effective. DOE must specifically approve these measures.

Glare: Any brightness or brightness relationship that annoys, distracts, or reduces visibility.

Glass load factor: A number combining glass's solar heat transmission and its heat conduction. Used for cooling load calculations.

Glazing: Glass installation. Pertaining to glass assemblies or windows

Glazing Compound : A flexible, putty-like material used to seal glass in its sash or frame.

Grade: The pitch of a slope such as a roof or a hill.

Grantee: The individual or organization that receives a grant.

Gravity furnace: A central heating system that uses natural gravity to distribute heat throughout the dwelling unit as opposed to forced circulation, pumps, or circulation blowers.

Ground fault circuit interrupter (GFI or GFCI) : An electrical connection device that breaks a circuit if a short occurs. These are required for all exterior use of electrical equipment, or when an electrical outlet is located near a water source.

Ground-moisture barrier: Most crawl spaces require ground-moisture barriers to prevent the ground from being a major cause of moisture problems. The ground under a building is the most potent source of moisture in many buildings, especially those built on crawl spaces.

Gusset: A metal or wood plate added to the surface of a joint to strengthen the connection.

Gypsum board: A common interior sheeting material for walls and ceilings made of gypsum rock powder packaged between two sheets of heavy building paper. Also called drywall, sheetrock, gyprock, or gypboard.

Habitable space: A building space intended for continual human occupancy. Examples include areas used for sleeping, dining, and cooking, but not bathrooms, toilets, hallways, storage areas, closets, or utility rooms. See occupiable space and conditioned space.

Hallway return or hallway return system: A type of mobile home air distribution system. The mobile home heating or cooling system receives return air through a central trunk line beneath the hallway.

Hatch: A rectangular hole in a horizontal building assembly like a floor or ceiling that allows access

Hazardous Material: A particular substance that is considered a danger to the client or crew.

Head: Foot pounds of mechanical energy per pound of fluid created by a pump to overcome gravity or friction.

Head jamb: Groove at the top of the window that allows the window sashes to slide into place and sit inside the window frame.

Health and safety (H&S): Provision included in a 1976 law change for the Weatherization Assistance Program. WAP now considers the health and safety of low-income families, as well as reducing their energy costs.

Heat: Molecular movement

Heat anticipator: A device in a thermostat that causes the thermostat to turn off before room temperature reaches the thermostat setting, so that the house doesn't overheat from heat

remaining in the heater and distribution system after the burner shuts off.

Heat capacity: The quantity of heat required to raise the temperature of 1 cubic foot of a material 1 degree F.

Heat exchanger : The device in a heating unit that separates the combustion chamber from the distribution medium and transfers heat from the combustion process to the distribution medium.

Heat gains: Term used to mean unwanted heat that accumulates in homes, making mechanical cooling desirable or necessary.

Heat loss: The amount of heat escaping through the building shell as measured for a specific period of time (month, year, etc.)

Heat pump : A type of heating/cooling unit, usually electric, that uses a refrigerant fluid to heat and cool a space.

Heat-recovery ventilator: A central ventilator that transfers heat from exhaust to intake air.

Heat rise: The number of degrees of temperature increase that air is heated as it is blown over the heat exchanger. Heat Rise equals supply temperature minus return temperature.

Heat transmission: Heat flow through the walls, floor, and ceiling of a building, not including air leakage.

Heat transfer coefficient: See U-factor.

Heating degree day(s) (HDD): See: Degree days

Heating Load: The maximum rate of heat conversion needed by a building during the very coldest weather.

Heating seasonal performance factor (HSPF): Rating for heat pumps describing how many Btus they transfer per kilowatt-hour of electricity consumed.

High-efficiency particulate air (HEPA) vacuum: HEPA vacuum means a vacuum cleaner which has been designed with a high-efficiency particulate air (HEPA) filter as the last filtration stage.

High limit: A bimetal thermostat that turns the heating element of a furnace off if it senses a dangerously high temperature.

Hinges: The metal objects that attach your door to the jamb, normally with screws. They can be made from brass, steel, iron, or other metals.

Hip roof : A roof with two or more contiguous slopes, joined along a sloping "hip."

Home energy index : The number of BTUs or kWh of energy used by a home, divided by its area of conditioned square feet.

Home energy rating systems (HERS) : A nationally recognized energy rating program that give builders, mortgage lenders, secondary lending markets, homeowners, sellers, and buyers a precise evaluation of energy losing deficiencies in homes.

Home heating index: The number of Btus of energy used by a home divided by its area in square feet, then divided by the number of heating degree days during the time period.

HOME Program: A program created under Title II (the Home Investment Partnership Act) of the National Affordable Housing Act of 1990. Provides funds for states to expand the supply of decent and affordable housing for low-income people. This program can be easily coordinated with a state's WAP efforts.

Home Ventilating Institute (HVI): A non-profit association of manufacturers of residential ventilating products offering a variety of services including test procedures, certification and verification programs for products, and market support.

Hot roof: An unventilated roof with insufficient insulation to prevent snow melting on the roof and the creation of ice dams.

House as a system: The concept that many components of a house interact, affecting the home's comfort and performance.

House depressurization limit: A selected indoor negative pressure; expressed in Pascals, immediately around vented combustion appliances that use indoor air for combustion supply air.

House pressure: The difference in pressure between the indoors and outdoors measured by a manometer.

House wrap: A generic term for the modern version of the building's water-resistive barrier.

HUD: U.S. Department of Urban Housing and Development

Humidistat: An automatic control that switches a fan, humidifier, or dehumidifier on and off to control relative humidity.

Humidity ratio: Same as "absolute humidity." The absolute amount of air's humidity measured in pounds or grains of water vapor per pound of dry air.

HVAC: Heating, Ventilation, and Air-Conditioning System. All components of the appliances used to condition interior air of a building.

Hydronic system: A heating system that uses hot water or steam as the heat-transfer fluid. Commonly called a hot-water heating system.

Hygrometer: A tool for measuring relative humidity. A psychrometer, which uses two thermometers, one with a dry bulb and one with a wet bulb, is a simple hygrometer.

IAQ: Indoor Air Quality. The quality of indoor air relative to its acceptability for healthful human habitation.

I-beam: A rolled or extruded metal beam having a cross section resembling an I.

IC rated: Insulation Contact rating for light fixtures. IC housings may be in direct contact with fibrous insulation.

Ice dam: Ice that forms at the roof eaves during differential freezing and thawing.

IECC: International Energy Conservation Code

Ignition barrier: A material installed to prevent another material, often plastic foam, from catching fire.

Illumination: The light level measured on a horizontal plane in Foot Candles

Inaccessible cavity: An area that is too confined to enter and/or maneuver in by an average installer/technician.

Incandescent light: The common light bulb found in residential lamps and light fixtures and known for its inefficiency.

Inches of Water Column (IWC) : A non-metric unit of pressure difference. One IWC is equal to about 0.004 Pascals.

Incidental repairs: Under DOE rules, this term refers to the repairs on a dwelling unit necessary for the effective performance or preservation of the allowable energy conservation measures to be installed.

Indirect leakage: When air leaks into the home at one point, and out at a different opening. Indirect leakage is more difficult to find, and is associated with interior bypasses or chaseways of a home's interstitial cavities.

Indoor air quality (IAQ): The quality of indoor air relative to its acceptability for healthful human habitation.

Induced draft : A vent system or combustion appliance for which a fan, installed at or very near the termination point of the appliance or the vent pipe, moves the combustion gases.

Infiltration: Infiltration refers to the movement of air into a building through cracks and penetrations in the building envelope.

Infrared : Pertaining to heat rays emitted by the sun or warm objects on earth.

Infrared camera : A special camera that “sees” temperature differences on surfaces, allowing the user to determine if a building assembly is insulated properly. This instrument is also useful for detecting air leakage if used with a blower door.

Infrared thermography: The science of using infrared imaging to detect radiant energy or heat loss characteristics of a building.

Input rating: The measured or assumed rat at which an energy-using device consumes electricity or fossil fuel.

Insolation: The amount of solar radiation striking a surface.

Inspector: A weatherization worker responsible for quality control or quality assurance by making final inspections and in-progress inspections.

Inspection gap: A gap in foundation insulation left for the purpose of inspecting for insect infestation.

Insulated flex duct: A round duct composed of two flexible plastic tubes with tubular insulation between the two.

Insulated glass: Two or more glass panes spaced apart and sealed in a factory.

Insulation: A material used to resist heat transmission.

Insulation dam: A material that prevents fibrous insulation from flowing into an area where it isn't necessary or wanted.

Insulation restrainer: A flexible material, such as netting or fabric, use to hold blown fibrous insulation in place.

Insulation shield: A fire-barrier erected around a heat producing device to prevent insulation from covering or contacting the heat-producing device.

Insulated glass unit (IGU): Two or more glass panes spaced apart and sealed in a factory,.

Intentionally conditioned: Conditioned by design and fitted with radiators, registers, or other devices to maintain a comfortable temperature.

Intermediate zone: A zone located between the building's conditioned space and the outdoors, like a crawl space or attic.

Intermittent ignition device (IID) : A device that lights the pilot light on a gas appliance when the control system calls for heat, thus saving the energy wasted by a standing pilot.

Internal gains: The heat generated by bathing, cooking, and operating appliances, that must be removed during the summer to promote comfort.

International Association of Plumbing and Mechanical Officials (IAPMO): The industry trade group that develops the Uniform Mechanical Code and the Uniform Plumbing Code.

International Codes Council (ICC): An international non-governmental organization for developing building safety, fire prevention, and energy efficiency codes (I-codes).

International Fuel Gas Code (IFGC): Code that addresses the design and installation of fuel gas systems and gas-fired appliances through requirements that emphasize performance.

International Residential Code (IRC)

Interstitial Space : Space between framing and other building components.

Intrusion : Air moving into and out of insulation without going through the wall or ceiling assembly.

Jalousie windows: A type of window usually associated with homes with two or more panes of glass that pivot on a horizontal axis.

Jamb: The side or top piece of a window or door frame.

Jamb clips or plates: Structural devices used to fasten a block-frame window to its opening.

Joist: A horizontal wood framing member that supports a floor or ceiling.

Joule: A unit of energy. One thousand joules equals 1 BTU.

Kerf: A slit made by cutting, often with a saw.

Kilowatt: A unit of electric power equal to 1000 joules per second or 3412 Btus per hour.

Kilowatt-hour: The most commonly used unit for measuring the amount of electricity consumed over time; one kilowatt of elec-

tricity supplied for one hour. A unit of electric energy equal to 3600 kilojoules.

Knee wall: A short wall, often under three feet in height. The term is derived from the association with the vertical location of the human knee. Knee walls are common in old houses that are typically not a full two stories in height, in which the ceiling on the second floor slopes down on one or more sides. These houses are sometimes referred to as one and a half stories.

Knee-wall attic: An triangular attic with short walls, usually under three feet in height.

Knob-and-tube wiring: Early standardized method for electrical wiring in homes consisting of insulated copper conductors supported by porcelain knobs and tubes (when passing through framing members).

Lamp: A light bulb.

Latent heat: The amount of heat energy required to change the state of a substance from a solid to a liquid, or from a liquid to a gas.

Lath : A support for plaster, consisting of thin strips of wood, metal mesh, or gypsum board.

Lawrence Berkeley National Laboratory (LBNL): Member of the national laboratory system supported by DOE though its Office of Science. It conducts unclassified research across a wide range of scientific disciplines.

Lead-Safe Work Practices (LSW): Work practices required by DOE for pre-1978 homes when the weatherization work will disturb more than 2 square feet of painted surface in an interior room, 10 percent of a small component such as a baseboard or door casing, and/or when the work will disturb more than twenty square feet of painted exterior surface.

Leadership in Energy and Environmental Design (LEED): A building certification system developed by the U.S. Green Building Council.

Leakage ratio: Measurement of total square inches of air leakage area per 100 feet of building envelope surface area.

Light quality : The relative presence or absence of glare and brightness contrast. Good light quality has no glare and low brightness contrast.

Local agency: Also referred to as the subgrantee, contractor, service delivery network member, or local service provider, a local agency is a nonprofit organization or unit of local government responsible for providing WAP services in a specified political subdivision.

Loose fill insulation: Fibrous insulation in small fibers that are blown into a building assembly using a blowing machine.

Low-flow rings: Part of a blower door that forces air past the sensors fast enough so that a reliable reading can be obtained.

Low-E: Short for "low emissivity", which means the characteristic of a metallic glass coating to resist the flow of radiant heat.

Low expanding foam: Liquid-applied form that expands 20-30 times its liquid size.

Low water cutoff: A float-operated control for turning the burner off if a steam boiler is low on water.

Lumen: A unit of light output from a lamp.

Luminaire: A light fixture.

Main panel box: The electric service box containing a main switch, and the fuses or circuit breakers located inside the home.

Make-up air: Air supplied to a space to replace exhausted air.

Manifold : A tube with one inlet and multiple outlets, or multiple inlets and one soutlet.

Manometer: A differential gauge used for measuring pressure.

Manual J: Load calculation that allows the user to properly size HVAC systems for single-family-detached homes, small multi-

unit structures, condominiums, town houses, and manufactured homes.

Manufactured home: A home or a "double-wide" structure. Transportable homes that are quick and cheap to build. Another name for home.

Manufactured Home Energy Audit (MHEA): A tool to predict manufactured home energy consumption and recommend weatherization retrofit measures, accounting for local weather conditions, retrofit measure costs, and fuel costs.

Mastic: A thick creamy substance used to seal seams and cracks in building materials.

Masonry: Stone, brick, or concrete block construction.

Materials safety data sheet (MSDS): A sheet containing data regarding the properties of a particular substance, intended to provide workers with procedures for handling or working with that substance in a safe manner, including information such as physical data, toxicity, health effects, first aid, storage, disposal, and protective equipment.

Mean radiant temperature (MRT): The area-weighted mean temperature of all the objects in an environment.

Mechanical draft: A combustion appliance with induced draft of forced draft.

Meeting rails: The rail of each sash that meets a rail of the other when the window is closed.

Membrane: A barrier that separates two environments. Membranes may be permeable to the flow of air, water, and other fluids or particles.

Microclimate: A very localized climatic area, usually of a small site or habitat.

Mildew: Fungi that colonize organic building materials.

Mitigate: To make less severe or to mollify.

Mobile home belly: Part of a home that contains the insulation, duct system, and plumbing. It is enclosed by the sub- and finished floor, with a rodent barrier underneath.

Mobile Home Energy Audit (MHEA): A software tool that predicts manufactured home energy consumption and recommends weatherization retrofit measures.

Moisture meter: An instrument for measuring the percentage of water in a substance.

Mold: A growth of minute fungi forming on vegetable or animal matter and associated with decay or dampness.

Monitor: The process through which a person, frequently a representative of a State or Federal agency, visits completed units to ensure that weatherization funding is spent appropriately.

Monitoring: The process through which a person, frequently a representative of a State or Federal agency, visits completed units to ensure that weatherization funding is spent appropriately.

Mortar: A mixture of sand, water, and cement used to bond bricks, stones, or blocks together.

Mortise: A recessed area cut into the wood framing member where a hinge or wood tongue fits.

MSDS: Materials Safety Data Sheet.

Mud sill: A wood component attached to the foundation of a building that creates a means of attaching various components of the framing to the foundation.

Mullion: Vertical framing members that don't run the full length of the door.

Multifamily (MF) housing: A building with five or more residential units.

Mushroom vent: A vent that has at the top of a vertical shaft a broad rounded cap that can be screwed down to close it.

N-factor: A factor used to convert blower-door measurements taken at CFM50 to CFMnatural, the amount of air leakage that occurs naturally. N ranges from 9 to 35.

Nail fin: Semi-flexible strips of metal or plastic used to attach a window frame to a rough opening.

Nailing Flange: An extrusion attached to the window and used to attach the unit to the opening.

National Association for State Community Services Programs (NASCSP) : Assists States in responding to poverty issues. NASCSP members are state administrators of the Community Services Block Grant (CSBG) and U.S. Department of Energy's Weatherization Assistance Program (DOE/WAP).

National Bureau of Standards (NBS): Renamed by the Department of Commerce as the National Institute of Standards and Technology (NIST).

National Electric Code (NEC): A safety code regulating the electricity use. The NEC is a product of the National Fire Protection Association.

National Energy Audit Tool (NEAT): Created by Oak Ridge National Laboratories as a DOE approved audit qualifying for the 40% materials waiver. It is a computerized auditing tool for prioritizing energy conservation measures for houses.

National Fenestration Rating Council (NFRC): NFRC is a non-profit organization that administers the only uniform, independent rating and labeling system for the energy performance of windows, doors, skylights, and attachment products.

National Fire Protection Association (NFPA): Creates and maintains minimum standards and requirements for fire prevention, training, and equipment, developing and publishing codes and standards such as the NFPA 70, the National Electric Code, and NFPA 54, the National Fuel Gas Code.

National Institute for Occupational Safety and Health (NIOSH): A federal agency responsible for conducting research and mak-

ing recommendations for the prevention of work-related injury and illness to help ensure safe and healthful working conditions.

Natural draft : Draft that relies on buoyancy heated gases to move combustion gases up a chimney.

Natural gas: A hydrocarbon gas that is usually obtained from underground sources, often in association with petroleum and coal deposits.

Natural Ventilation: Ventilation using only natural air movement without fans or other mechanical devices.

Net Free Vent Area (NFVA): The area of a vent after that area has been adjusted for insect screen, louvers, and weather covering. The free area is always less than the actual area.

Netting: An open weave fabric or plastic mesh that supports fibrous insulation.

NFPA: National Fire Protection Association.

NFPA 211: National Fire Protection Association's Standard for Chimneys, Fireplaces, Vents, and Solid-Fuel-Burning Appliances includes installation procedures for vents and chimneys that serve wood-burning stoves and fireplaces.

NFPA 31: National Fire Protection Association's Standard for the Implementation of Oil-Burning Equipment, dictating that chimneys must be at least 2 feet higher than any portion of the building within 10 feet.

NFPA 54: National Fire Protection Association's National Fuel Gas Code.

Noncombustible material: Materials that pass the test procedure for defining noncombustibility of elementary materials set forth in ASTM E 136.

Nonconditioned space: A space that isn't heated or cooled.

Non-expanding foam: Spray foam that does not expand. Used in window and door jambs, and other constricted spaces where

expanding foam may distort building materials and negatively impact operation.

Non-flame retention head burner: An older type of burner than the "flame retention head burner," requiring more excess air, which burns less efficiently.

Nozzle: An orifice for spraying a liquid like fuel oil.

O_2: Oxygen

Oak Ridge National Laboratory (ORNL): Laboratory where the Mobile Home Energy Audit (MHEA) software was developed.

Occupants: People of any age living in a dwelling. Animals are not defined as occupants.

Occupational Safety and Health Administration (OSHA) : An agency of the United States Department of Labor, with a mission to prevent work-related injuries, illnesses, and occupational fatality by issuing and enforcing standards for workplace safety and health.

Off-gas: Off-gassing is the evaporation of volatile chemicals in non-metallic materials at normal atmospheric pressure. This means that building materials can release chemicals into the air through evaporation.

Ohm: A unit of measure of electrical resistance. One volt can produce a current of one ampere through a resistance of one ohm.

One-part foam: One-part foam comes in spray cans (e.g., Great Stuff) and spray guns with screw-on cans. One-part foam is best suited for filling gaps and holes less than ¾".

Open-combustion appliance: An appliance that does not have a sealed combustion chamber and may take its combustion air from the surrounding room.

Open-Combustion Heater: A heating device that takes its combustion air from the surrounding room air.

Orifice: A hole in a gas pipe or nozzle fitting where gas or fuel oil exits to be mixed with air before combustion occurs in the heating chamber. The size of the orifice will help determine the flow rate.

Oscillating Fan: A fan, usually portable, that moves back and forth as it operates, changing the direction of the air movement.

OSHA : Occupational Safety and Health Administration

Output capacity: The useful heat in BTUH that a heating unit produces after accounting for waste.

Over-fired: In reference to furnaces; when too much fuel is being burned, as a response to over-sized fuel nozzles, over-pressurization from the pump, etc.

Oxidation: The combination of a substance with oxygen.

Oxygen content: A measure of the amount of oxygen in the air.

Oxygen-depletion sensor: A safety device on a heating unit that shuts off the fuel supply to the combustion chamber when oxygen is depleted.

Packaged air conditioner: An air conditioner that contains the compressor, evaporator, and condenser in a single cabinet.

Packaged terminal air conditioner (PTAC): A self-contained space heating and/or cooling system, usually powered with electricity, commonly found in hotels and apartment buildings.

Packaged terminal heat pump (PTHP): A self-contained space heating and/or cooling system, frequently installed in a sleeve through the exterior wall of a building, using heat pump technology.

Panel: Parts of a door between rails and stiles or mullions.

Parapet walls: A low wall at the edge of a platform, roof or bridge,

Parts per million (ppm) : The unit commonly used to represent the degree of pollutant concentration, where the concentrations are small.

Pascal (Pa): A unit of measurement of air pressure. One column inch of water equals 247 pascals. Atmospheric pressure (29.92 inches of mercury) is equivalent to 102,000 PA. 2.5Pa = 0.01 inches of water column.

Passive attic venting: Takes advantage of the natural buoyancy of air by providing inlets and outlets low and high on the roof. Warm air rises through higher vents and cooler air is drawn through eave vents as the warm air escapes.

Payback period: The number of years that an investment in energy conservation will take to repay its cost through energy savings.

Performance standard: Specification of the conditions that will exist when a satisfactory job is performed.

Perimeter basement drain: An indoor drain cut into the floor and around the perimeter of a basement or crawl space to intercept and remove water from the building interior.

Perlite: A heat-expanded mineral used for insulation.

Perm: A measurement of how much water vapor a material transmits per hour. Specifically: diffusion of 1 grain of water vapor per hour, per square foot, per inch of mercury pressure.

Permeance rating: Number that quantifies the rate of vapor diffusion through a material.

Personal fall arrest system: A system used to arrest an employee in a fall from a working level. It consists of an anchor point, connectors, a body belt or body harness and may include a lanyard, deceleration device, lifeline, or combinations of these.

Personal protective equipment (PPE): Accessories such as safety glasses, ear plugs, and respirators worn to protect individuals from workplace hazards.

Phase change: The act of changing from one state of matter to another, for example: solid to liquid or liquid to gas.

Photoresistor: Electronic sensing device used to sense flame, daylight, artificial light.

Photovoltaic (PV): A solid-state electrical device that converts light directly into direct current electricity.

PIC: Polyisocyanurate foam insulation.

Picture window: Picture windows have no operable sashes and are used primarily for aesthetics.

Pier and beam foundation: Housing base that uses a concrete footing and pier to support wood beams and floor joists.

Plaster: A plastic mixture of sand, lime, and Portland cement spread over wood or metal lath to form the interior surfaces of walls and ceilings.

Plastic tie band: A ratcheting plastic band used to clamp flexible ducts to metal ducts or to attach insulation to round metal ducts.

Plate: A framing member installed horizontally to which the vertical studs in a wall frame are attached.

Platform framing: A system of framing a building in which floor joists of each story rest on the top plates of the story below or on the foundation sill for the first story, and the bearing walls and partitions rest on the subfloor of each story.

Plenum: The piece of ductwork that connects the air handler to the main ducts.

Plumb: Absolutely vertical at a right angle to the earth's surface.

Plywood: Laminated wood sheeting with layers cross-grained to each other.

Pocket doors: Doors that slide into a wall cavity and are typically very leaky.

Polyethylene: A plastic made by the polymerization of ethylene, used in making translucent, lightweight, and tough plastics, films, insulations, vapor retarders, air barriers, etc.

Polyisocyanurate (PIC): A plastic foam insulation sold in sheets, similar in composition to polyurethane.

Polystyrene insulation: A rigid plastic foam insulation, usually white, pink, green, or blue in color.

Polyurethane: A versatile plastic foam insulation, usually yellow in color.

Porosity: Measure of the void spaces in a material, expressed as either a fraction or a percentage of the total volume of material.

Positive-pressure, supplied-air respirator : Has its own air compressor to supply fresh air to the worker, and can use a mask or hood.

Potential Energy: Energy in a stored form, like fuel oil, coal, wood, or water stored at a high elevation

Potentiometer: A variable resistor used as a controller or sensor.

Pounds per square inch (psi): Units of measure for the pressure a gas or liquid exerts on the walls of its container.

Power burner: A burner that moves combustion air at a pressure greater than atmospheric pressure. Most oil-fired burners are power burners. Gas burners used to replace oil burners are usually power burners.

Power vent: A combustion appliance that uses fan-powered draft for venting combustion byproducts.

Prescriptive standard: Specifies in detail the requirements and procedures to be followed rather than specifying a performance outcome.

Present value (PV): The amount that a future sum of money is worth today given a specified rate of return.

Pressure: A force encouraging movement of a fluid by virtue of a difference in some condition between two areas.

Pressure balancing: To equalize house or duct pressure by adjusting air flow in supply and return ducts. Used on dwellings with forced air heating systems.

Pressure boundary: The surface that separates inside from outside, in relation to conditioned space within the home. Also called air boundary or air barrier.

Pressure diagnostics: The practice of measuring pressures and flows in buildings to control air leakage, and also to ensure adequate heating and cooling air flows and ventilation.

Pressure-equalized rain screen: A space between the water-resistive barrier and the cladding in an exterior wall that is connected to the outdoors so that there is no pressure difference between the space and the outdoors. This assembly gives superior resistance to wind-driven rain where such weather is common.

Pressure pan: A device used to block a duct register while measuring the static pressure behind it.

Pressure-pan testing: One method for determining duct leakage. Uses a pressure pan, manometer, and a blower door to quantify pressure differences and verify improvements after duct sealing.

Pressuretrol: A control that turns a steam boiler's burner on and off as steam pressure changes.

Pressure-reducing valve: An adjustable valve that reduces the building's water pressure to provide water to hydronic and steam heating systems.

Pressure-and-temperature relief valve: A safety component required on a boiler and water heater, designed to relieve excess pressure or temperature in the tank.

Primary air: Air mixed with fuel before combustion.

Prime window: The main window installed on the outside wall consisting of fixed or moveable lights that slide on permanently fixed tracks (not to be confused with a storm window).

Priority list: The list or ranking of installation measures developed by a program to produce the most cost effective energy savings results based on a savings to investment ratio calculation.

Propane (liquefied petroleum gas, or LPG): A colorless, flammable gas occurring in petroleum and natural gas.

Psychrometer: An instrument for determining atmospheric humidity by the reading of two thermometers, the bulb of one being kept moist and ventilated.

Psychrometric chart: A chart presenting the physical and thermal properties of moist air in graphical form. Used in conjunction with a psychrometer to determine relative humidity, dew point, and other characteristics.

Psychrometrics: The study of the relationship between air, water vapor, and heat.

Pull-down stairs: Staircase that folds up into the attic until pulled down for use.

Pulley seals: A component of a window sash counterweight system that helps control the movement of the lower sash.

Purlins: Framing members that sit on top of rafters, perpendicular to them, designed to spread support to roofing materials.

Quality assurance: The systematic evaluation of a product or service to ensure quality standards are being met.

Quality control (QC): Review of the final work product to ensure that it was correctly done.

R-Value: A measurement of thermal resistance for materials and related surfaces.

Radiant barrier: A foil sheet or coating designed to reflect heat flows. Radiant barriers are not mass insulating materials.

Radiant temperature: The surface temperature of objects in a home, like walls, ceiling, floor, and furniture.

Radiation: Heat energy that is transferred by electromagnetic energy or infrared light, from one object to another. Radiant heat can travel through a vacuum and other transparent materials.

Radon: A radioactive gas that decomposes into radioactive particles.

Rafter : A roof beam that follows the roof's slope.

Rain screen: The combination of a water-resistive barrier and a space, used to keep wall assemblies dry in climates with high rainfall.

Rater: A person who performs energy ratings. Same as energy rater.

Recovery efficiency: A water heater's efficiency at actually heating water to capacity level without regard to standby or distribution losses.

Reflectance: The ratio of lamination or radiant heat reflected from a given surface to the total light falling on it. Also called reflectivity.

Reflective glass: Glass that has a mirror-like coating on its exterior surface to reflect solar heat. The solar heat gain coefficient of reflective glass ranges from 0.10 to 0.40.

Refrigerant: Any of various liquids that vaporize at a low temperature, used in mechanical refrigeration.

Refrigerant: A special fluid used in air conditioners and heat pumps that heats air when it condenses from a gas to a liquid and cools air when it evaporates from a liquid to a gas.

Register: The grille cover over a duct outlet for warm air distribution or cold air return and sometimes control the flow.

Relamping: The replacement of an existing, standard light bulbs with lower wattage energy efficient bulbs like compact fluorescent lamps.

Relative humidity: The percent of moisture absorbed in the air compared to the maximum amount possible. For instance, air that is completely saturated has 100% relative humidity.

Relay: An automatic, electrically-operated switch.

Reset controller: Adjusts fluid temperature or pressure in a central heating system according to outdoor air temperature.

Resistance: The property of a material resisting the flow of electrical energy or heat energy.

Retrofit: An energy conservation measure applied to an existing building or the action of improving the thermal performance or maintenance of a building.

Return air: Air circulating back to the furnace or central air conditioning unit from the house, to be heated or cooled and supplied back to the living area.

Return plenum: Used in reference to mobile home furnaces: Part of the belly return system where air is drawn back to the furnace through a louver in the floor of the furnace closet.

Revolutions per minute: Number of times the crankshaft of an engine, or the shaft of a motor, rotates in one minute. RPM is a function of the design of the equipment and the power supply.

Reweatherized unit: Any unit that received weatherization services prior to September 30, 1994 and has received additional services under subsequent grants or allowed by current DOE regulations.

Ridge venting: Ridge venting is a continuous vent (or two strips of vents) along the roof ridge. Usually combined with continuous soffit or eave vents as part of an overall attic ventilation system.

Rim joist: The outermost joist around the perimeter of the floor framing. Also known as band joist.

Riser: Transition piece that connects the main duct to the floor and is often vulnerable to failure. See also duct boot.

Rodent barrier: Guard used to keep rodents from entering a mobile home through the belly.

Roof jack: Chimney assembly that penetrates the roof and includes the flashing and chimney cap assemblies.

Roof vent: A louver or small dome mounted on a roof (often near the ridge) to allow the passage of air through the attic.

Room air conditioner: An air conditioning unit installed through a wall or window, which cools the room by removing heat and releasing it outdoors.

Room heater: A heater located within a room and used to heat that room.

Rough opening: The framed opening in a wall into which a door or window is installed.

Safety glass: Glass that is toughened or laminated so that it is less likely to splinter when broken.

Sash : A movable or stationary part of a window that frames a piece of glass.

Saturation: Describing vapor and liquid at the phase-change point. The condition in which the air cannot hold any more moisture, as a function of temperature and vapor pressure.

Savings-to-investment ratio (SIR): SIR is computed over the lifetimes of the retrofit measures installed and expressed in terms of the net present value of the retail cost of the dwelling's fuel. SIRs of greater than one are counted as cost effective under this DOE WAP method of determining cost-effectiveness.

Scale: Dissolved minerals that precipitate inside boilers and storage tanks.

Sealed combustion: A heater that draws air for combustion from outdoors and has a sealed exhaust system.

Sealed combustion heater: A heater that draws air for combustion from outdoors and has a sealed exhaust system. Also called a direct-vent appliance.

Seasonal efficiency: Refers to the overall efficiency of the central heating system including on and off cycle fuel utilization and heat loss. The calculation of these factors is represented in the Annual Fuel Utilization Efficiency (AFUE) rating for the appliance. Distribution system loss is not factored into the AFUE.

Seasonal energy efficiency ratio (SEER): A measurement of energy efficiency for central air conditioners. The SEER is computed by dividing cooling capacity, measured in BTUh, by the Watts (see also Energy Efficiency Rating).

Seasonal heating performance factor (SHPF): Ratio of useful heat output of a heat pump to the electricity input, averaged over a heating season.

Secondary air: Combustion air surrounding a flame.

Sensible heat: The heat required to change the temperature of a material.

Sequencer: A bimetal switch that turns on the elements of an electric furnace in sequence.

Service equipment: The electric meter and main switch, usually located outside the building.

Service wires: The wires coming from the utility transformer to the service equipment of the building.

Set-point: The heat absorbed or evolved by a substance during a change of temperature that is not accompanied by a change of state.

Shading coefficient (SC): A decimal describing how much solar energy is transmitted through a window opening compared to

clear single glass having an SC of 1.0. For example, reflective glass has an SC of 0.20 to 0.45.

Sheathing: Structural sheeting, attached on top of the framing, underneath the siding and roofing of a building. Any building material used for covering a building surface.

Sheet Metal and Air Conditioning Contractors' National Association (SMACNA): An international association of contractors who specialize in heating, ventilation and air conditioning.

Sheeting: Common term for any building material used for covering a building surface.

Sheetrock: See drywall.

Shell: The building's exterior envelope including walls, floor, and roof.

Shingle: A modular roofing material, usually asphalt, that is installed in overlapping rows to cover the entire roof.

Short circuit: A dangerous malfunction in an electrical circuit where electricity is flowing through conductors and into the ground without going through an electric load, like a light or motor.

Side jamb: Grooves in window that allow the window sashes to slide up and down or side to side.

Sill: The bottom of a window or door frame.

Sill Box: The outer area of the floor bound by the rim joist, floor joist, sill plate, and floor.

Sill Pan: A flashing device that sits on a rough-framed window sill to prevent water infiltration should water infiltrate the cladding and sealant around the finished window.

Single-family (SF) home: A free-standing residential building

SIR: See savings-to-investment ratio.

Skirting: A non-structural screening built around the exterior of an open crawl space to exclude animals, wind and sunlight. Also has aesthetic value.

Slab-on-grade foundation: Housing base that uses concrete slabs formed from molds set in the ground. Concrete is poured into the mold all at one time, with no space left between the ground and the home.

Slider window: A slider window is essentially a double-hung window turned on its side so the sashes move horizontally.

Sling psychrometer: A device holding two thermometers that is slung through the air to measure relative humidity.

Slope : The roof section of an attic with the roof and ceiling surfaces attached to the rafters.

Smoke-developed index: The level of smoke that a material produces when burning in a fire test compared to red oak, which has a rating of 100.

Smoke tester: Device to test the amount of smoke being produced by an oil burning furnace. High smoke means the fuel-to-air ratio is off, and combustion is less efficient than it should be.

Soffit: The underside of a roof overhang or a small lowered ceiling, as above cabinets or a bathtub.

Solar absorption: Solar absorption is that portion of total solar energy neither transmitted nor reflected.

Solar exposure: The amount of solar energy falling on a horizontal surface.

Solar control film: Plastic films, coated with a metallic reflective surface, that are adhered to window glass to reflect solar heat gain. See also window film.

Solar gain: Heat from the sun that is absorbed by a building's materials and contributes to the heating and cooling requirements of the dwelling.

Solar heat: Radiant energy from the sun with wavelengths between 0.7 and 1 micrometers.

Solar Heat Gain Coefficient (SHGC): The ratio of solar heat gain through a window to incident solar heat, including both transmitted heat and absorbed/radiated heat.

Solar Heat Gain Factor (SHGF): Solar heat gain amount on a surface with a particular angle and orientation expressed in Btus per square foot per hour.

Solar reflectance: The ratio of reflected to incident light. See also albedo.

Solar Screen: A framed screen designed to absorb solar heat before it transmits through window glass that is installed on the window's exterior.

Solar transmittance: The percent of total solar energy transmitted by a material.

Solar water heater: System in which water is heated by solar radiation.

Solenoid: A magnetic device that moves a switch or valve stem.

Sone level: An international unit used to measure sound levels. One Sone is equivalent to the sound of a quiet refrigerator in a quiet kitchen.

Space conditioning: Heating, cooling, or ventilation of an indoor space.

Space heating: Heating the living spaces of the home with a room heater or central heating system.

Spauling: White, chalk-like coating on concrete caused by water picking up salts as it migrates through concrete, then leaving the salts on the surface when it evaporates. Also spelled, "spalling."

Span: Horizontal distance between supports.

Specific heat: The ratio of the heat storage capacity of a particular material to the heat storage capacity of water.

Spillage: Temporary flow of combustion gases from a dilution device.

Spline: A strip of vinyl, rubber, or plastic that, when inserted into a groove, holds a screen or plastic film in place on a frame.

Split-system air conditioner: An air conditioner having the condenser and compressor outdoors and the evaporator indoors.

Spray foam: Liquid-applied foam that expands forming a rigid foam material with millions of insulating cells.

Spot source ventilation: Spot source ventilation includes things like kitchen exhaust fans and bathroom exhaust fans.

Stack Effect: The term describes the effect of higher pressure at the top of a structure, lower pressure at the bottom of a structure, and neutral pressure somewhere in between, relative to the ambient (surrounding) air pressure. It is usually the result of different densities of warmer and cooler air (convective airflow).

Standard Work Specifications: Voluntary guidelines for quality work for residential energy upgrades. These specifications define the minimum requirements for high-quality installation of energy efficiency measures.

Standing Loss: Heat loss from a hot water storage tank through its shell.

State point: Air at a particular temperature and humidity occupies a single point on the psychrometric chart called a state point.

Static pressure: Measurement of pressure in a fluid filled chamber at a specific location. Use of a static pressure probe allows measuring pressures in forced air duct systems without regard to pressure changes due to movement of air in the system.

Steady state efficiency (SSE): The measurement of heating efficiency measured by a combustion analyzer.

Steel chassis: Supporting frame for the mobile home structure exclusive of the body or housing.

Steam trap: An automatic valve that closes to trap steam in a radiator until it condenses.

Steam vent: A bimetal-operated air vent that allows air to leave steam piping and radiators, but closes when steam strikes the surface.

Stiles: Full-length vertical framing members of a door.

Stop: A thin, trim board for windows and doors to close against or slide against.

Strapping: Similar to furring. A nailer applied to a building surface.

Strike plate: The metal plate attached to the door jamb that the latch inserts into upon closing.

Strip heat: Heat provided by an electric-resistance heating cable or element as in a heat pump for auxiliary heat or emergency heat.

Stucco: Plaster applied to the building's exterior walls.

Stud: A vertical wood or metal framing member used to build a wall.

Subfloor: The sheathing over the floor joists and under the floor covering.

Subcooling: The number of degrees Fahrenheit that a condenser and nearby piping cools the liquid refrigerant below its saturation temperature.

Subgrantee: A person or agency that is awarded a sub-grant and is accountable to the grantee for the utilization of resources.

Substrate: A layer of material to which another layer is applied.

Sulfur dioxide (SO_2): A colorless, nonflammable, water-soluble gas.

Sump pump: A pump that removes water from underneath a house or building.

Superheat: The number of degrees Fahrenheit that an evaporator and nearby piping heats gaseous refrigerant above its saturation temperature.

Supply air: Air that has been heated or cooled and is moved through the ducts and to the supply registers of a home.

Suspended ceiling: Modular ceiling panels supported by a hanging frame.

Tankless water heater: Rather than storing hot water, a tankless unit heats water as it is being used.

Task lighting: Lighting provided at the area where a visual task is performed.

Temperature: A measure of the heat present.

Temperature and pressure relief valve: A safety component required on a boiler and water heater, designed to relieve excess pressure buildup in the tank.

Temperature rise: The number of degrees of temperature that the heating fluid increases as it moves through the heat exchanger.

Therm: A unit of energy equal to 100,000 Btus or 29.3 kilowatt-hours.

Thermal barrier: A material that protects materials behind it from reaching 250° F during a fire. Drywall is a 15-minute thermal barrier.

Thermal break: A relatively low heat/cold conductive material separating two highly conductive materials, installed to reduce heat flow through the assembly.

Thermal bridging: Rapid heat conduction resulting from direct contact between very thermally conductive materials like metal and glass.

Thermal boundary: A line or plane where insulation and air barrier(s) exist in order to resist thermal transmission and air leakage through or within a building shell.

Thermal Bypass: A large air leak that carries allows air to flow around insulation.

Thermal Conductance: A material's ability to conduct heat, which uses the letter **k**.

Thermal emittance: The ability of a material to release absorbed heat.

Thermal enclosure/envelope: The boundaries of a dwelling that surround the conditioned space.

Thermal mass: A solid or liquid material that will absorb and store warmth and coolness until it is needed.

Thermal resistance : R-value; a measurement expressing the ability to resist heat flow.

Thermal transmittance: Expressed as U-factor, thermal transmittance is heat flow by conduction, convection, and radiation through a non-uniform layered building component like a wall.

Thermistor: An electronic resistor used to sense temperature.

Thermocouple: A bimetal-junction electric generator used to keep the safety valve of an automatic gas valve open.

Thermodynamics: The science of heat.

Thermostat: A device used to control a heating or cooling system to maintain a set temperature.

Threshold: The raised part of a floor underneath a door that acts as an air and dust seal.

Total solar energy rejected: The percent of incident solar energy rejected by a glazing system equals solar reflectance plus the part of solar absorption that is reradiated outward.

Tracer gas: A harmless gas used to measure air leakage in a building.

Training and technical assistance (T&TA): Program structure that ensures that all work in the field meets State standards. This

ensures that there is a feedback loop and accountability within the program.

Transformer: A double coil of wire that increases or decreases voltage from a primary circuit to a secondary circuit.

Trim: Decorative wood that covers cracks around window and door openings and at the corners where walls meet floors and ceilings. Sometimes called molding.

Truss: A braced framework usually in the shape of a triangle to form and support a roof.

Tuck-under garage: Architectural style in which the garage is situated underneath a room of the house.

Turbine vent: Vent usually mounted on the roof of a building. The vent has at its head a globular, vaned rotor that is rotated by wind, conveying air through a duct to and from a chamber below.

Two-part foam: A triple-expanding foam appropriate for larger and more numerous air leaks, and for insulating crawl space walls and other big jobs. Two-part foam comes in portable two-tank kits and truck-mounted rigs.

Type IC Recessed Electrical Fixture : An electrical fixture that is rated to be in direct contact with fibrous insulation.

Type-S fuses: Fuse type with a rejection base that prevents tampering as well as mismatching.

U-factor: The total heat transmission in BTUs per square feet per hour per degree Fahrenheit between the indoor and the outdoors.

U.S. Department of Agriculture (USDA): United States government agency responsible for agricultural programs, USDA also administers some low-income housing programs.

U.S. Department of Energy (DOE): United States government agency whose mission is to advance energy technology and promote related innovation in the United States.

U.S. Department of Housing and Urban Development (HUD):

United States government agency charged with rule-making and enforcement of the HUD Code.

U.S. Environmental Protection Agency (EPA): The mission of the U.S. Environmental Protection Agency is to protect human health and the environment.

U-value: See U-factor. An older term for U-factor.

Ultraviolet Radiation: Light radiation having wavelengths beyond the violet end of the visible spectrum; high frequency light waves.

Unconditioned Crawl Space: A crawl space without a supply of heat from a forced-air register or other heat emitter.

Unconditioned space: An area within the building envelope not intentionally heated.

Underlayment : Sheeting installed to provide a smooth, sound base for a finish material.

Under-fired: A burner that isn't receiving a sufficient flow rate of fuel.

Underwriter's Laboratory (UL): A private laboratory that tests materials and lists their fire-resistance characteristics.

Uniform Mechanical Code (UMC): A model code developed by the International Association of Plumbing and Mechanical Officials to govern the installation and inspection of mechanical systems.

Uniform Plumbing Code (UPC): A model code developed by the International Association of Plumbing and Mechanical Officials to govern the installation and inspection of plumbing systems.

Unintentionally conditioned: A space that is heated or cooled by energy that escapes the heating or cooling system. For example: a cooled attic or heated crawl space, which have no intentional energy delivery or comfort needs.

Unvented attic: An attic space without intentional vents to ventilate it.

Upduct: An automatic vent, between the conditioned space and the attic, that operates by the pressure created by an evaporative cooler and exhausts room air into the attic. Used when open windows are a security problem.

Upflow furnace: A furnace in which the heated air flows upward as it leaves the furnace.

Upstream: Toward the source of the flow.

Vapor barrier: A material that controls water-vapor diffusion to less than 0.1 perms.

Vapor diffusion: The flow of water vapor through a solid material.

Vapor permeable: A material with a water vapor permeance or more than 10 perms.

Vapor pressure: The ratio of the water vapor in an air mass to a pound of that air. Measured in grains per pound or pounds per pound. Also known as absolute humidity.

Vapor retarder: A material that controls water-vapor diffusion to less than 10 perms.

Vaporize: To change from a liquid to a gas.

Vaulted attic/ceiling: An attic bounded by a sloped ceiling and sloped roof, which is created by a truss and typically has more than 16 inches of space between the ceiling and roof.

Veiling reflection: Light reflection from an object or task that obscures details.

Veneer: The outer layer of a building component that protects or beautifies the component.

Vent connector: The vent pipe carrying combustion gases from the appliance to a vent or chimney.

Vent chute: A lightweight plate that directs air from a soffit over attic insulation and along the bottom of the roof deck to ventilate the attic and cool the roof deck. A baffle.

Vent damper: An automatic damper powered by heat or electricity that closes the chimney while a heating device is off.

Vent pipe: The pipe carrying combustion gases from the appliance to the chimney.

Vent terminations: Where a vent leaves the building. Vent terminations must prevent intrusion of moisture, detritus, or pests into the building, and allow safe exhaust of vented gases.

Vented crawl space: Crawlspace with grilles or vents installed to allow for passive ventilation beneath the home.

Venting: The removal of combustion gases by a chimney or horizontal vent.

Venting system: A continuous passageway from a combustion appliance to the outdoors through which combustion gases can safety pass.

Ventilation: Refers to the controlled air exchange within a structure such as local ventilation, whole-house ventilation, attic ventilation, and crawl space ventilation.

Vermiculite: A heat-expanded mineral used for insulation.

Visible Transmittance: The percent of visible light transmitted by a glass assembly.

Visqueen: Polyethylene film vapor barrier.

Volt: The amount of electromotive force required to push a current of one ampere through a resistance of one ohm.

Voltage drop: The loss of voltage in a circuit caused by resistance.

Volume: The amount of space occupied by a three-dimensional object or region of space, expressed in cubic units.

Water-resistive barrier: Used to prevent water from contacting a building's sheathing and structural components.

Watt (W): A unit of measure of electric power at a point in time, as capacity or demand. One Watt of power maintained over time is equal to one joule per second.

Watt-hour : One Watt of power extended for one hour. One thousandth of a kilowatt-hour.

Watt meter: An instrument for measuring, in watts, the electric power in a circuit.

Weatherization: The process of reducing energy consumption and increasing comfort in buildings by improving the energy efficiency of the building while maintaining health and safety.

Weatherization Assistance Program (WAP): DOE's Weatherization

Weatherization program notices (WPN): Guidance documents issued by the U.S. Department of Energy for the weatherization program.

Weather-resistant barrier: See water-resistive barrier.

Weatherstripping: Flexible gaskets, often mounted in rigid metal strips, for limiting air leakage at openings in the shell like doors and windows.

Webbing: A reinforcing fabric used with mastics and coatings to prevent patches from cracking.

Weep holes: Holes drilled for the purpose of allowing water to drain out of an area in a building where it has accumulated.

Wet-bulb temperature: The temperature of a dampened thermometer of a Sling Psychrometer used to determine relative humidity, dew point, and enthalpy.

Wet spray: Fibrous insulation mixed with water and sometimes also a binder during installation.

Whole-house fan: A fan that draws fresh outside air into the living space, flushes hot air up the attic and exhausts it to the outside.

Whole-house ventilation: Controlled air exchange using one or more fans and duct systems.

Wind effect: House pressure and airflow between indoor and outdoors caused by the wind.

Wind washing: Air entering and leaving the attic is frequently able to blow through fibrous attic insulation, removing heat as it goes.

Window films: Plastic films coated with a metallic reflective surface that are adhered to window glass to reflect infrared rays from the sun.

Window frame: The sides, top, and sill of the window forming a box around window sashes and other components.

Window stop: A wood trim member nailed to the window frame to hold, position, or separate window parts. The stop is often molded into the jamb liners on sliding windows.

With reference to (WRT): Compared to another measurement. In weatherization, a way to assess pressure differences between ducts and the rest of the home.

Work order: An order authorizing specific work to be done. Sometimes called the work scope.

Workforce Guidelines: DOE guidance on specific energy conservation measures; also called Standardized Work Specifications.

Work scope: The summary of energy conservation measures, materials lists and labor estimates that is prepared by an energy auditor as part of an energy audit.

Worst-case depressurization test: A safety test, performed by specific procedures, designed to evaluate the probability of chimney back-drafting.

Zone: A room or portion of a building separated from other rooms by an air barrier.

Zone pressure diagnostics (ZPD): Using a blower door to determine the interconnectivity of various building components,

which helps the practitioner locate the air barrier and know if the insulation and air barrier are aligned. Also called zonal pressure diagnostics.